southco®

ENGINEERED ACCESS SOLUTIONS

Handbook 72

TOUCH POINT
FOCUS

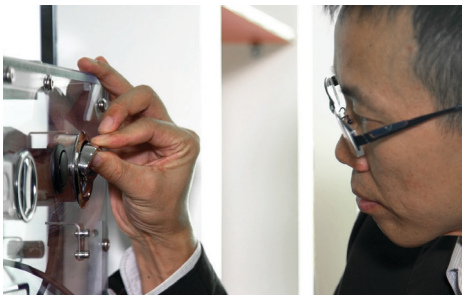

Southco products are the “Touch Points” with which the end users interact. The design, functionality, ergonomics, and overall quality of these touch points greatly influence that product’s perceived value.

Southco’s passion and focus is to Engineer, Manufacture and Deliver outstanding touch points that will consistently

Enhance your Customer’s Experience and Support your Brand.

As your partner we provide you with:

CREATIVITY

Provide your customers with **Innovative touch points** that **support your brand**

CONTROL

Successful execution of your projects with control of: Engineering, Manufacturing, Supply Chain and Testing

CONFIDENCE

Global Program and Customer Management,
Proven solutions and expertise to **save time and money by doing it right the first time**

YOUR SOLUTIONS PARTNER

CREATIVITY

100,000+
Standard Products

40,000+
Custom Products

40
Customer Specific Products Launched Each Month

500+
Engineers

12
Design Centers in **9** Countries

CONTROL

3,500+
People

22 Countries Speaking **12** Languages

84%
of Products Made Locally to **Minimize Lead Times**

10
Manufacturing Locations in **7** Countries

18
Stocking Locations with **200+** Distributor Locations

CONFIDENCE

150,000+
Customers Worldwide

INCLUDING

10 of 10 Top Automotive Manufacturers

20 of 20 Top Electronics Companies

Over **50** Industries Cross Leveraging Product Designs & Volumes

100
Technical Field Sales Engineers in **19** Countries

110
Distributors in **37** Countries

8
Direct Customer Service Centers in **8** Countries

PRODUCT FUNCTIONALITY
FOR EVERY EXPERIENCE

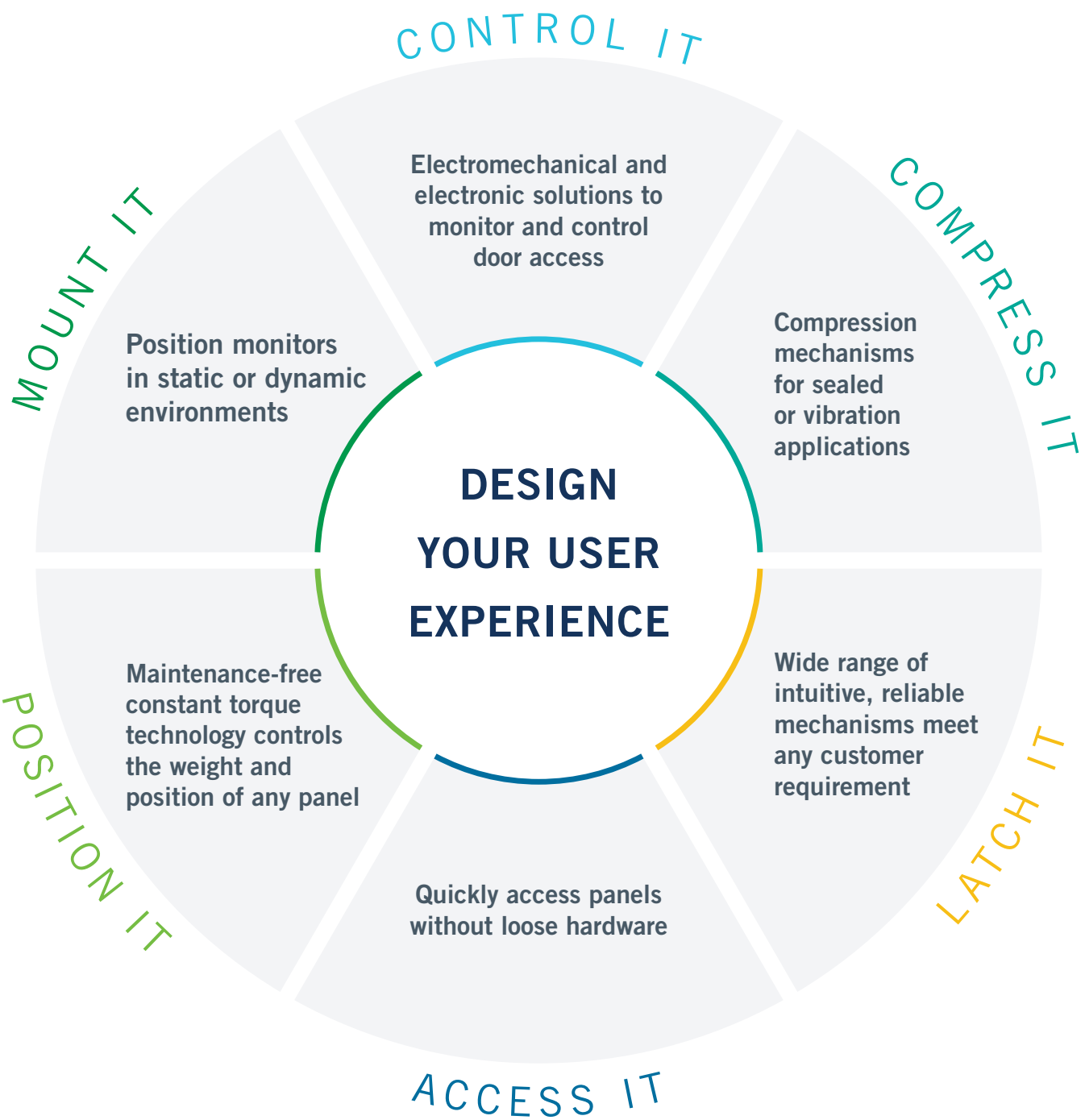

PROVEN SUPPLIER
TO A WORLD OF INDUSTRIES

TRANSPORTATION

- Automotive
- Aerospace
- Bus / Coach
- Marine
- Off-Highway
- Railway
- RV
- Specialty Vehicles
- Truck

DIVERSIFIED TECHNOLOGIES

- Data Centers
- Digital Signage
- Electronics
- Enclosures
- Food Equipment
- Gaming
- Healthcare
- HVAC
- Industrial Machinery
- Kiosks
- Outdoor Lighting
- Power Generation

GLOBAL CONNECTIVITY

15 GLOBAL LOCATIONS

12 Design Locations
10 Manufacturing Locations
15 Shipping Locations

SALES | ENGINEERING | CUSTOMER SERVICE | DISTRIBUTION

in over **40** Countries

Global & Americas Headquarters - Concordville, Pennsylvania, USA
European Headquarters - Worcester, United Kingdom
Asia Pacific Headquarters - Hong Kong, China

OPERATIONAL EXCELLENCE

Our commitment to manufacturing excellence ensures your production is kept moving.

Quality

Delivery

Design Integrity

Continuous investment in core processes in each region

- Die Casting
- Injection Molding
- Stamping
- Cold Heading
- Machining
- Turning
- Manual / Automated Assembly
- Finishing

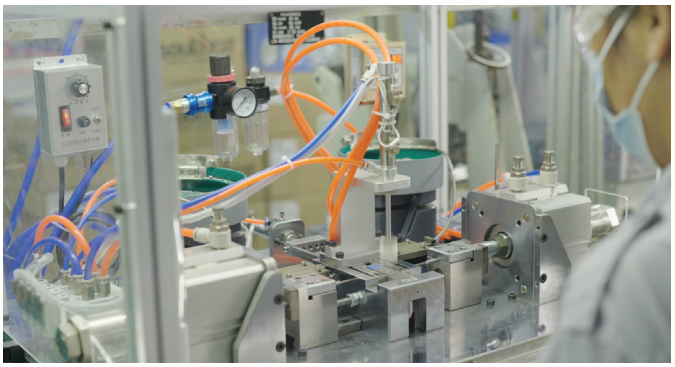

Quality and Efficiency. Driven by Technology

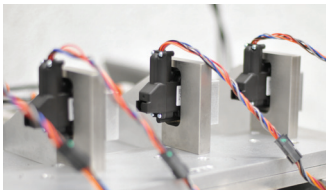

Global Product Testing

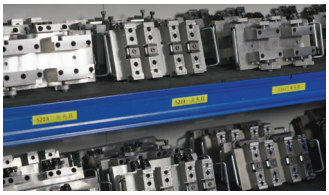

Tool Design & Construction

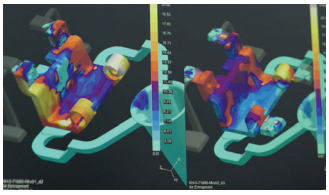

Mold Flow Analysis

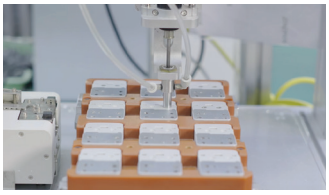

Automation

Processes certified to global standards

CORPORATE
SOCIAL RESPONSIBILITY

Our employees are the heart of our business. We are committed to supporting them and their families, as they strive to improve their overall health and wellness through our global health and well-being plan.

We are **passionate about making a difference** in the community that we live and work in.

Many of our employees across the world give up their time, provide their expertise and **volunteer in the community** they live and work in.

We help to **raise funds** for **over 40** voluntary **organizations** and **charities** worldwide

Working with young people in schools, colleges and universities to inspire the **next generation of engineers**

Creating **better social well-being** at work has a positive effect on our business, employees and their families

Environment **Community** **Education**

SOUTHCO WEBSITE

Southco.com provides you with the tools you need to manage your designs and operations 24/7. Speed your design process with the complete information and innovative design tools. Request quotes and place & manage orders through the self-service capabilities.

Research

- Industry Pages provide overview of how products serve your needs.
- Resource Center provides information on case studies, new products, and product functionality.
- Certification database makes it easy to find products that meet common industry certifications.

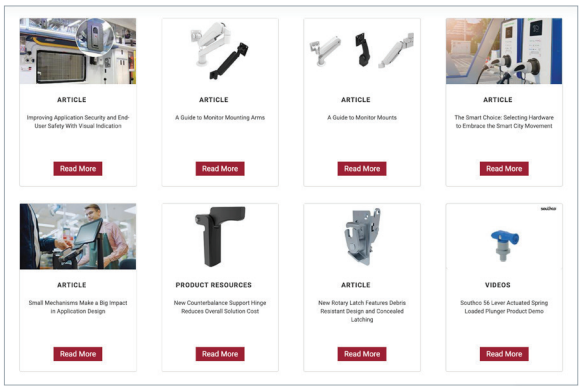

Design

- Intuitive site search and Product Category pages allow you to select the best products for your user experience.
- CAD files are available for 90% of our products to place the product in your design.
- Video animations allow you to envision how products will function in your application.

Purchase

- Receive price and delivery information quickly.
- Manage your orders directly through the self-service system.
- Connect with Southco through email, chat, or phone.

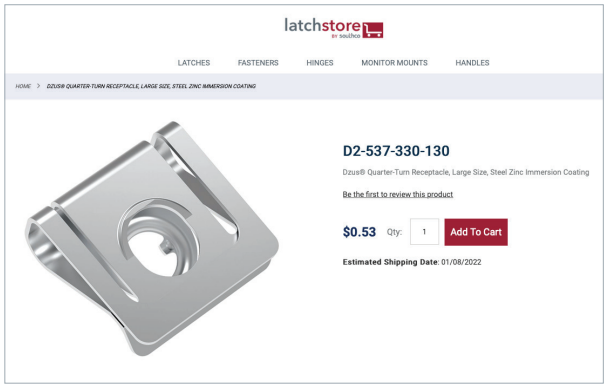

Visit **www.southco.com** for all your Access Hardware needs

PRODUCT DIRECTORY

Electronic Access Solutions

PAGES 12-55

- Concealed, controlled, secure access
- Vandal resistant
- Remote monitoring and operation

Monitor Mounts

PAGES 56-85

- Integrated positioning technology that provides precision control
- Maintenance-free performance for the lifetime of most applications
- No need for adjustment or maintenance

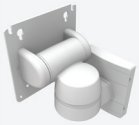

Compression Latches

PAGES 86-145

- Eliminate noise and rattle
- Compress gaskets to provide environmental or EMI/RFI sealing
- Many key and tool access options

Cam Latches & Swinghandles

PAGES 146-187

- 90˚ Cam rotation
- Fixed and adjustable grip options
- Adaptable to multi-point latching

Cam Locks and Lock Cores

PAGES 188-203

- Multiple access control styles
- Flexible key code options
- Broad range of sizes

*Product Class index on page 629

Multi-Point Latching Systems

PAGES 204-233

- A single user touch point operates multiple latching points
- Available for indoor and outdoor enclosures

Push-to-Close Latches

PAGES 234-285

- Simply push the door to close
- Visible and concealed styles
- Variety of operating methods

Rotary Latch Systems

PAGES 286-323

- Single or multi-point latch capability
- Compatible with wide array of actuators
- FMVSS 206 compliant products

Draw Latches

PAGES 324-363

- For co-planar and off-plane applications
- Wide variety of sizes and styles
- Draw panels tightly together to eliminate rattles and compress gaskets

Hinges & Positioning Technology

PAGES 364-429

- Provides added functionality
  - position control
  - removal capability
- Concealed and surface mount

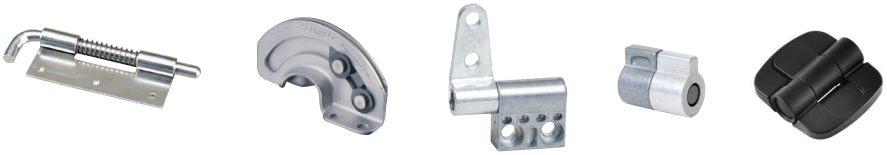

*Product Class index on page 629

PRODUCT DIRECTORY

DZUS® Quarter-Turn & Quick Access Fasteners

PAGES 430-509

- Provide fast access
- Suited for high-frequency, repeat access applications
- Captive to the panel; no lost hardware

Captive Screws

PAGES 510-570

- Wide variety of styles
- Standard machine screw metric & imperial sizes
- Captive to the panel

Inject-Eject Mechanisms

PAGES 571-591

- Assist in consistent engagement or removal of electronic modules
- Various access styles and inject/eject forces

Handles & Pulls

PAGES 592-604

- Fast, easy installation
- Concealed and low profile style

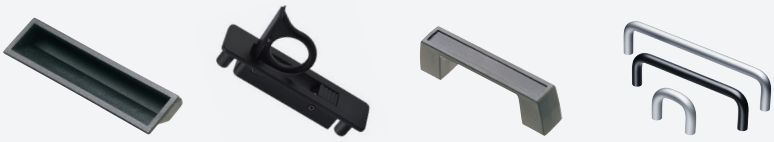

Entry Door Locksets

PAGES 605-623

- Suitable for cabin or entry door and deck applications
- Provide performance, design and styling

*Product Class index on page 629

TABLE OF CONTENTS

Touch Point Focus	Introduction
Your Solutions Partner	1
User Experience	2
Our Industries	3
Global Connectivity	4
Operational Excellence	5
Corporate Social Responsibility	6
Southco Website	7
Product Directory	8-10

Product Categories

Electronic Access Solutions	12 - 55
Monitor Mounts	56 - 85
Compression Latches	86 - 145
Cam Latches & Swinghandles	146 - 187
Cam Locks & Lock Cores	188 - 203
Multi-Point Latching Systems	204 - 233
Push-to-Close Latches	234 - 285
Rotary Latch Systems	286 - 323
Draw Latches	324 - 363
Hinges & Positioning Technology	364 - 429
DZUS® Quarter-Turn & Quick Access Fasteners	430 - 509
Captive Screws	510 - 570
Inject-Eject Mechanisms	571 - 591
Handles and Pulls	592 - 604
Entry Door Locksets	605 - 623
Warranty Statement	624
Glossary of SOUTHCO® Terms	625
Standard Finishes	626
Installation Guidelines for SOUTHCO® Self-Clinching Products	627
Product Attributes Index	628
Product Class Index	629

ELECTRONIC ACCESS

SOUTHCO® Electronic Access Solutions

Over 75 years of innovative engineered access solutions now combined with electronic actuation for remote control and monitoring of *SOUTHCO®* products.

Taking engineered access hardware to an entirely new level

- Increased security
- Improved access management
- System integration
- Industrial design

SC

H3-EM

R4-EM

EM-10

EA-KC2

AC-EM

EM-05

EA-P3

EA-A01

EA-A06

EA-BT

EA-R01

EA-R02

Electronic Access System

The Electronic Access System is comprised of an Access Control Device which signals the Electromechanical Latch to actuate. The Electromechanical Latch then produces an output signal to indicate latch status. A Manual Override actuates the latch in the absence of electric power.

Access Control

SOUTHCO® electromechanical latch and lock solutions can be remotely operated by a variety of **access control options** such as electronic keys, keypads, RF proximity readers, RF key fobs, biometrics and custom switches.

Electromechanical Latching

Southco's primary focus is the **electromechanical latching or locking device**, the most critical element of the electronic access system. Southco has combined electronics with our extensive knowledge of mechanical access solutions to create a set of innovative electromechanical latch and lock solutions.

Manual Override

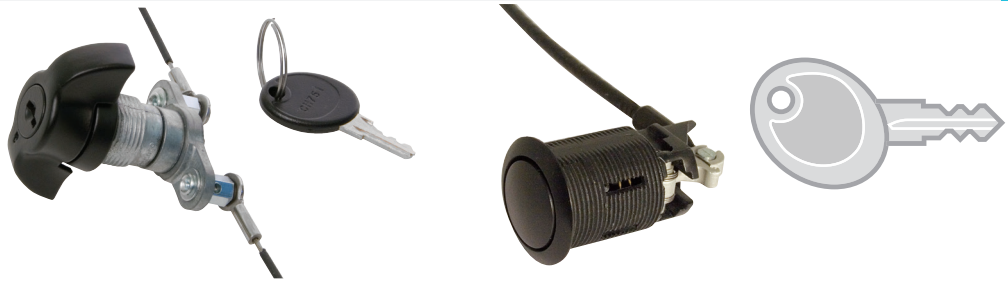

Many electronic access control systems require an override system to provide access when power is unavailable. Southco can provide creative **mechanical and electrical override solutions** based on our extensive portfolio of mechanical access solutions.

ELECTRONIC ACCESS SOLUTIONS

Electromechanical Rotary Latches

Pages 22 - 37

The R4-EM series delivers the convenience of electronic access control with the security of a proven, robust, rotary latch design in a compact, integrated package. Easy push-to-close operation and electronic actuation simplify access across a wide variety of applications. An optional microswitch provides feedback on latch status, and a full range of manual release options are available.

- 12-24 VDC operation, minimal current consumption
- Accepts control inputs from any access control device
- Operates against heavy mechanical loads

R4-EM-05

R4-EM-9

R4-EM-8

R4-EM-4, 6

R4-EM-5, 7

R4-EM-1, 2

Electromechanical Swing Handle

Pages 38 - 41

The H3-EM series features an efficient microprocessor-controlled gear motor design that ensures minimal power consumption and provides intelligent locking and monitoring capabilities. The H3-EM can be used as a standalone system, integrated with an existing building access control system or supplied as a fully networked system enabling remote monitoring and audit trail reporting.

- Easy integration with standard rack monitoring and security systems
- Integrated sensors for lock and latch status, monitoring and alarm functions
- Efficient gear motor design for low power consumption
- Available with card reader that accepts *HID*® 125 kHz, *MIFARE*® Classic, or *HID*® *iClass*® cards
- SEOS support now available

H3-EM-68

H3-EM-60

Electromechanical Actuators

Pages 42 - 43

The AC-EM actuator series offers a compact, push style actuator that can be combined with a mechanical latch or mechanism to facilitate the upgrade to electronic access. An efficient gear motor provides for high load capability with minimal power consumption.

- 5VDC or 12VDC operation, low current consumption
- 5 or 7 mm travel
- IP-67 / UL Class 1 Division 2 Rated
- Extend and Release & Extend and Hold Operation Styles

AC-EM

AC-EM

Electromechanical Slide Bolt

Pages 44 - 47

The EM series delivers enhanced access control to applications that require concealed, controlled, secure access. The EM series can be combined with a variety of door mounted mechanical latches, enabling remote electronic access while keeping existing mechanical locks as a manual override. This intelligent lock can be controlled by any input device, and features a microprocessor-controlled gear motor for actuation and push-to-close convenience.

- Concealed installation for increased security and enhanced industrial design
- Simple, quick installation and easy retrofit with existing designs
- Flexible access by varied electronic actuation sources
- Multiple mounting configurations and multi-point latching available
- Works with a variety of door-mounted mechanical latches

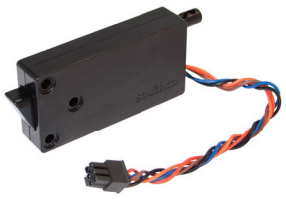

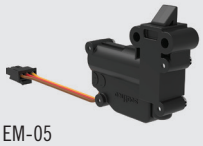
EM-05

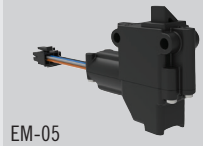
EM-05

EM-05

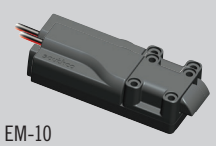
EM-10

Electromechanical Latches

Selection guide

	Latch Series	Latch Type	Maximun Working Load Rating	Sealed Electronics	Installation	Material	Integrated Microprocessor-Based Control	Integrated Card Reader or Keypad	Nominal Voltage Range
ELECTROMECHANICAL ROTARY LATCHES PAGES 22 - 37	R4-EM-05	Rotary Push-to-Close	Medium-Duty		Concealed	Steel and Plastic	✔		5-12 VDC
	R4-EM-9	Rotary Push-to-Close	Medium-Duty		Concealed	Steel and Plastic	✔		12-24 VDC
	R4-EM-8	Rotary Push-to-Close	Medium-Duty		Concealed	Steel and Plastic			12 or 24 VDC
	R4-EM-5 & 7	Rotary Push-to-Close	Heavy-Duty	✔	Concealed	Steel or Stainless Steel	✔		12-24 VDC
	R4-EM-4 & 6	Rotary Push-to-Close	Light-Duty		Concealed	Plastic	✔		12-24 VDC
	R4-EM-1 & 2	Rotary Push-to-Close	Heavy-Duty		Concealed	Steel	✔		12-24 VDC
ELECTROMECHANICAL SWING HANDLE PAGES 38 - 41	H3-EM-RFID	Swinghandle Cam	Light-Duty		Visible	Plastic	✔	✔	12-24 VDC
	H3-EM	Swinghandle Cam	Light-Duty		Visible	Plastic	✔		12-24 VDC

CONNECTION TYPE		OUTPUT		RELOCK TYPE*					
Integrated Connector	External Harness	Dry Contact	Transistor	Automatic	Delayed	Integrated LED Latch Status Indicator	Integrated Door Sensor	Manual Override	Electronic Unlock; Manual Door Release
✔				✔	✔		✔	Trigger provided	✔
✔				✔	✔		✔	Trigger provided	✔
✔		✔		✔			✔	Trigger provided	
	✔	✔		5 Series ✔	7 Series ✔			Trigger provided	
	✔	✔		4 Series ✔	6 Series ✔			Trigger provided	
	✔	✔		1 Series ✔	2 Series ✔			Trigger provided	
✔			✔		✔	✔		Integrated key lock	✔
✔			✔		✔	✔		Integrated key lock	✔

*See page 21 for more information

Electromechanical Latches

Selection guide

	Latch Series	Latch Type	Maximum Working Load Rating	Sealed Electronics	Installation	Material	Integrated Microprocessor-Based Control	Integrated Card Reader or Keypad	Nominal Voltage Range
ELECTROMECHANICAL ACTUATOR PAGES 42 - 43	AC-EM-05	Electronic Actuator	Light-Duty		Concealed	Plastic			5 VDC
	AC-EM-10	Electronic Actuator	Medium-Duty	Yes / IP55	Concealed	Plastic			5 or 12 VDC
ELECTROMECHANICAL SLIDE BOLT PAGES 44 - 47	EM-05	Slide cam Slide bolt Push-to-close	Medium-Duty		Concealed	Plastic	✔		12-24 VDC
	EM-10	Slide cam Slide bolt Push-to-close	Medium-Duty		Concealed	Plastic	✔		5, 12 or 24 VDC
	EM-05-5X	Slide Cam Slide Bolt Push-to-close	Light-Duty		Concealed	Plastic			5 VDC
	EM-05-4X	Slide Cam Slide Bolt Push-to-close	Light-Duty		Concealed	Plastic			5 VDC

CONNECTION TYPE		OUTPUT		RELOCK TYPE SEE PAGE 21 FOR MORE INFORMATION					
Integrated Connector	External Harness	Dry Contact	Transistor	Automatic	Delayed	Integrated LED Latch Status Indicator	Integrated Door Sensor	Manual Override	Electronic Unlock; Manual Door Release
	✔			✔					
	✔			✔	✔				
	✔	✔			✔			Trigger provided	
✔			✔		✔			Locking striker	
	✔			✔	✔				
	✔	✔		✔	✔		✔		

Electromechanical Rotary Latches

Overview

- Push-to-close, electronic release
- High electromechanical release load
- Minimal power draw
- Optional door sensor
- Mechanical over-ride
- 5VDC, 12VDC and 24VDC options

Latch and door status indication

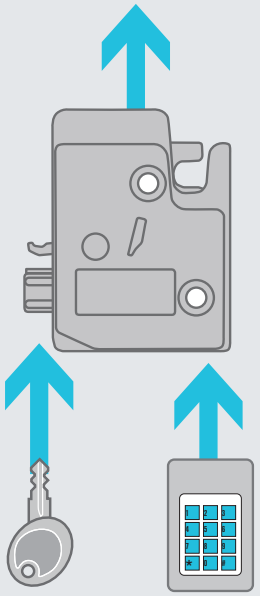

Mechanical override

Electronic access control

R4-EM-05

R4-EM-05 Series – Compact Size

The R4-EM-05 Series provides push to close convenience with electronic release in a compact design. The microprocessor controlled gear motor releases reliably under high loads while the integrated latch and door sensors ensure the application is secure. Operation configurations include auto re-lock and delayed re-lock. The integrated electronics easily connect with various access controls systems.

R4-EM-9

R4-EM-9 Series – Full-featured

The microprocessor controlled R4-EM 9 Series delivers next generation electronic rotary latching. All inputs are routed through the internal microprocessor, allowing expanded programing capability and customization of latch functionality. Extended housing provides added protection of the cam and an integrated trigger sensor provides indisputable lock/unlock status reporting. Additionally, the 9 Series offers a door retention feature which allows a door or panel to remain in the closed position until it is ready to be opened.

R4-EM-8

R4-EM-8 Series – Basic functionality

The R4-EM 8 Series combines the efficient and robust performance of a rotary latch mechanism with simplified DC motor actuation. The R4-EM 8 Series is available with or without an extended housing option to accommodate door sensing and to provide added protection of the locking cam. Additionally, the 8 Series is available with an integrated connector and mechanical override bracket, and features simple, concealed two-hole installation.

R4-EM-5 & 7

R4-EM 5 & 7 Series – Outdoor use

The R4-EM Outdoor provides reliable electronic access control in demanding environments. With its corrosion-resistant plated-steel or stainless steel outer body construction and fully-sealed internal actuator, the R4-EM Outdoor provides reliable electronic locking that is resistant to moisture and dust. The embedded electronic control allows integration with an external control system and flexible, concealed installation accommodates a variety of outdoor applications.

R4-EM-4 & 6

R4-EM 4 & 6 Series – Lightweight

The R4-EM Light Duty delivers proven electronic access control in a compact, lightweight integrated package. Easy push-to-close operation and simple installation make it an ideal solution for transitioning from mechanical to electronic access. The R4-EM Light Duty is available in both auto re-lock and delayed re-lock versions for added flexibility. Multiple mounting configurations and a compact size afford easy integration into existing designs.

R4-EM-1 & 2

R4-EM 1 & 2 Series – All-metal construction

The original, all-metal construction R4-EM delivers the convenience of electronic access control with the security of a proven, robust, all-metal rotary latch. Easy push-to-close operation and electronic actuation simplify access across a wide variety of applications. The R4-EM series accepts access control signals from access control devices as well as networked systems. An optional internal microswitch provides an output signal to remotely monitor latch status or control external systems.

Dimensions in millimeters (inch) unless otherwise stated

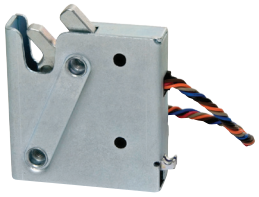

Auto Relock Operation Style

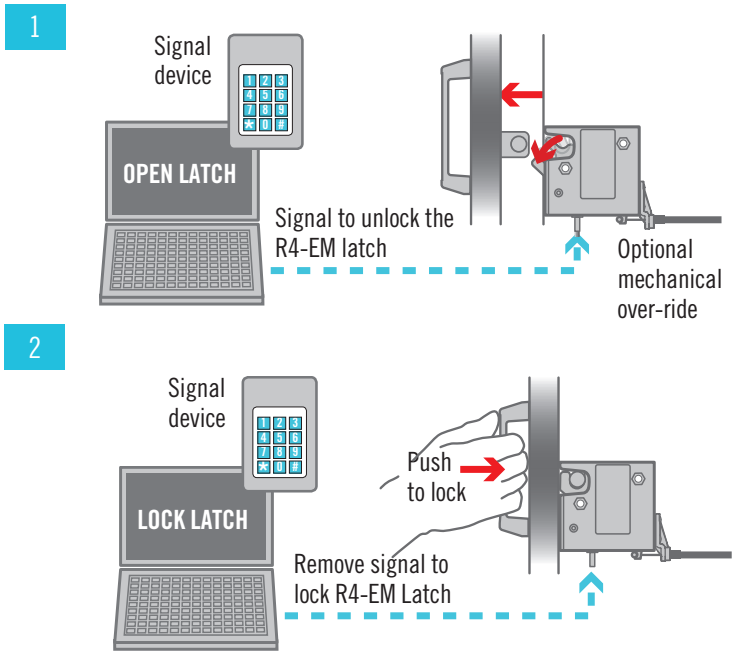

Operation Style - Auto relock

1. The signal unlocks the R4-EM latch and releases the spring loaded cam which rotates out to push a lightweight door open. The mechanism will cycle through unlatched then relatched state automatically, regardless of input signal on time.
2. Push door closed to engage striker after unlock time has expired. Striker will rotate cam to closed position.

Delayed Relock Operation Style

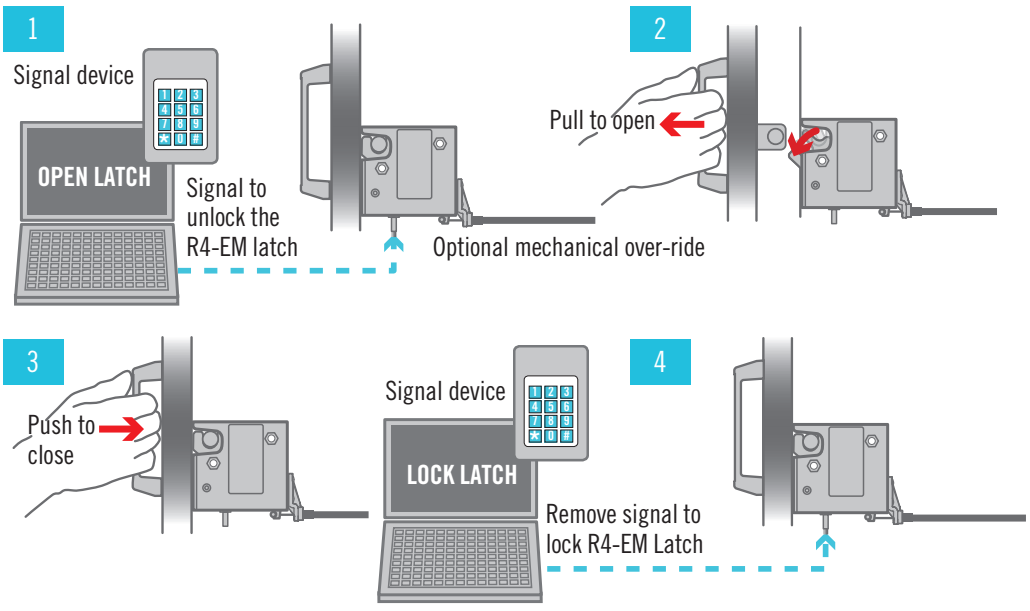

Operation Style - Delayed relock

1. The signal unlocks the R4-EM latch leaving a biased closed door in the closed position. The unlock time is controlled by the access control device.
2. Manually pull door/striker free from R4-EM latch.
3. Manually push door closed. Striker will rotate cam to closed position, however latch will remain unlocked and can be re-opened as long as signal is present.
4. After accessing the door, the signal can be removed to re-lock the R4-EM. This can be done with the door in the open or closed position.

R4-EM-05 Series Electromechanical Rotary Latch

Compact Size · Door Sense Option

Electronic access with internal motor control

- Push-to-close, electronic release
- Compact design
- Sensors ensure secure latch & door
- Latch releases reliably even under high load
- Integrated mechanical over-ride

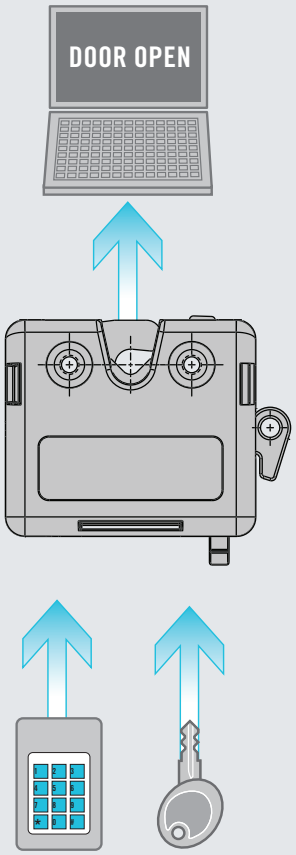

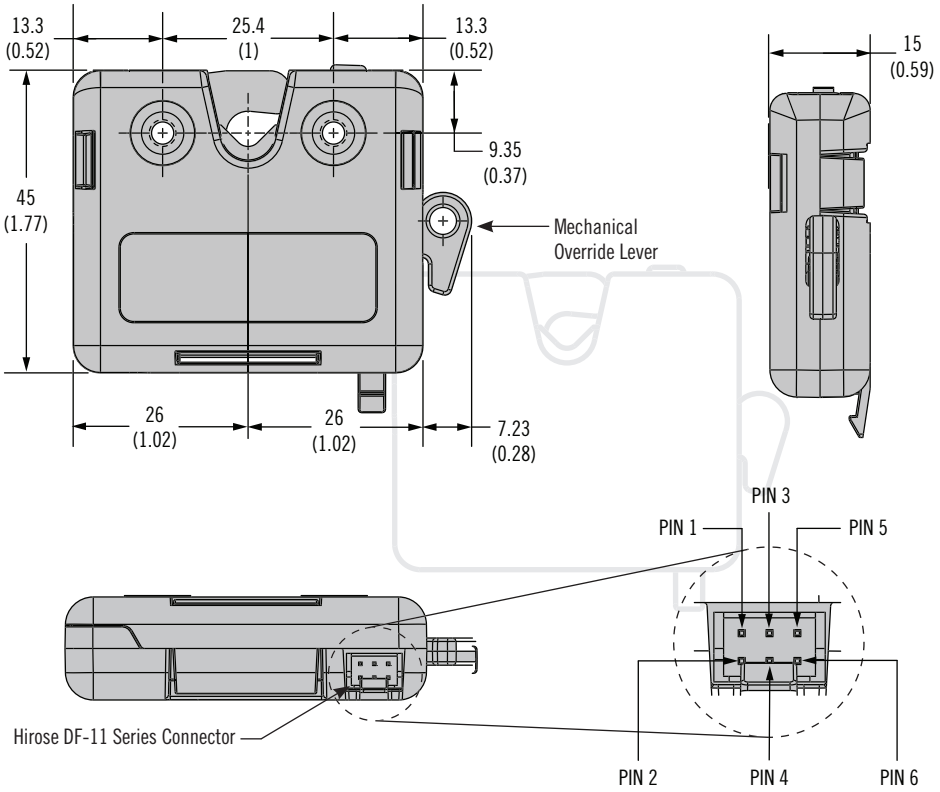

Part Number Selection

R4 - EM - T M 0 - 1 S 0 - P

T Operation Style
05A Auto relock
05D Delayed relock
See page 21 for operation details

M Mounting Type
0 4.5mm thru
1 8-32 UNC
2 M4x0.7

S Sensor Options
0 - Latch Sensor Only
5 - Latch & Door Sensor*
* Door sensor requires door sensor bracket

P Packaging Options
None Individually packaged
1 Bulk packaged

Installation

Panel Preparation

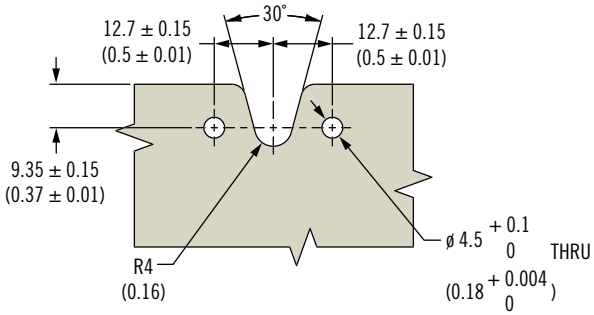

Dimensions in millimeters (inch) unless otherwise stated

southco®

Optional Striker and Door Sensor Bracket

Part Number	
Molded Striker	R4-0-61336
Door Sensor Bracket	R4-99-966

Part Number	
Wire Form Striker	R4-0-71060
Door Sensor Bracket	R4-99-966-1

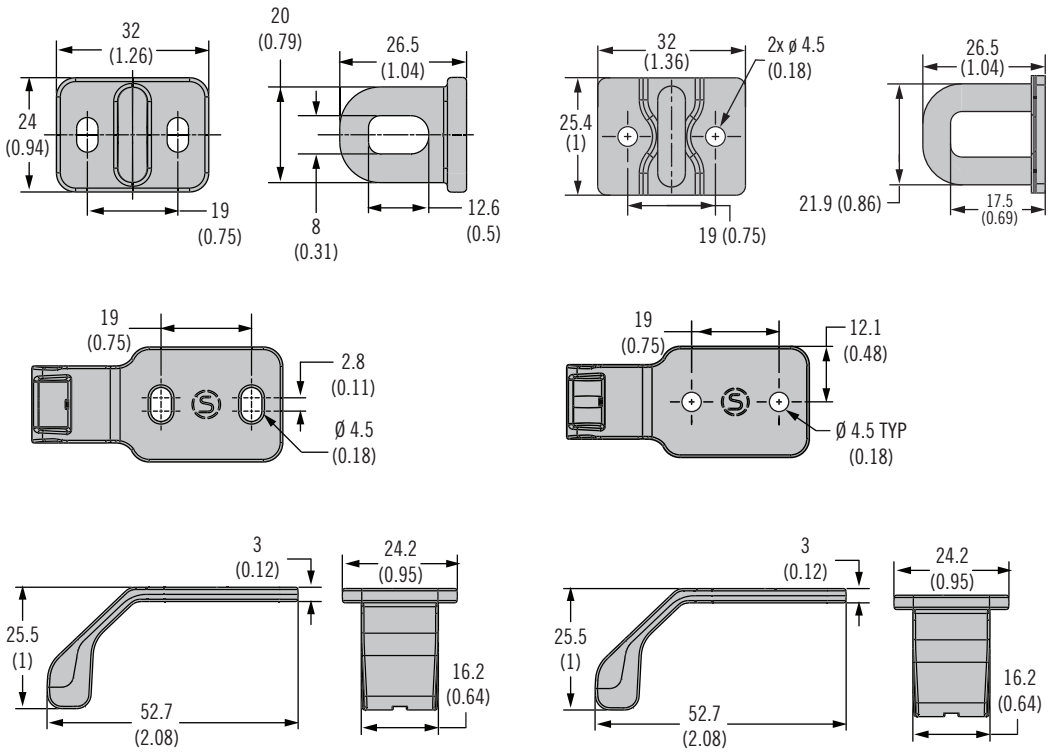

Material and Finish

Housing: PC/ABS
Latch frames, Pivot pins, Cam and Trigger: Steel, zinc plated
Striker: Steel, zinc plated or Glass-filled nylon, black
Door Sensor Bracket: PC/ABS, Magnet: Neodymium
Recommended Operating Voltage: 5 to 12 VDC
Typical Operating Current: Less than 500mA

Latch Connector PIN Assignment

PIN 1: Ground (-)
PIN 2: Power (+)
PIN 3: Not connected
PIN 4: Control signal
PIN 5: Latch status
PIN 6: Door status

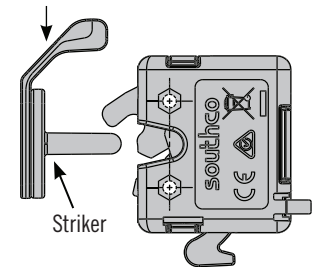

* Door sensor bracket required for door sense capability

Electronic Actuators
See page 48

Mechanical Actuators
See page 34

Cables
See page 322

Wiring/Junctions
See *www.southco.com*

Dimensions in millimeters (inch) unless otherwise stated

R4-EM 9 Series Electromechanical Rotary Lock

Concealed cam

Electronic access with internal motor control

12V

24V

- Push-to-close, electronic release
- High electromechanical release load
- Minimal power draw
- Integrated connector
- Extended housing for added security
- Door and Trigger Sensor
- Microswitch to detect latch status
- Mechanical over-ride with integrated cable bracket
- 12VCD to 24VCD operations
- Efficient DC gear motor actuation
- Detent mechanism for pull-open function
- Simple two-hole installation

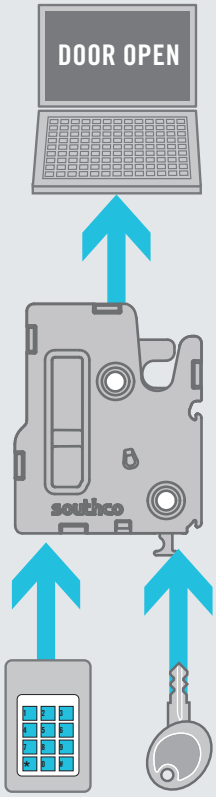

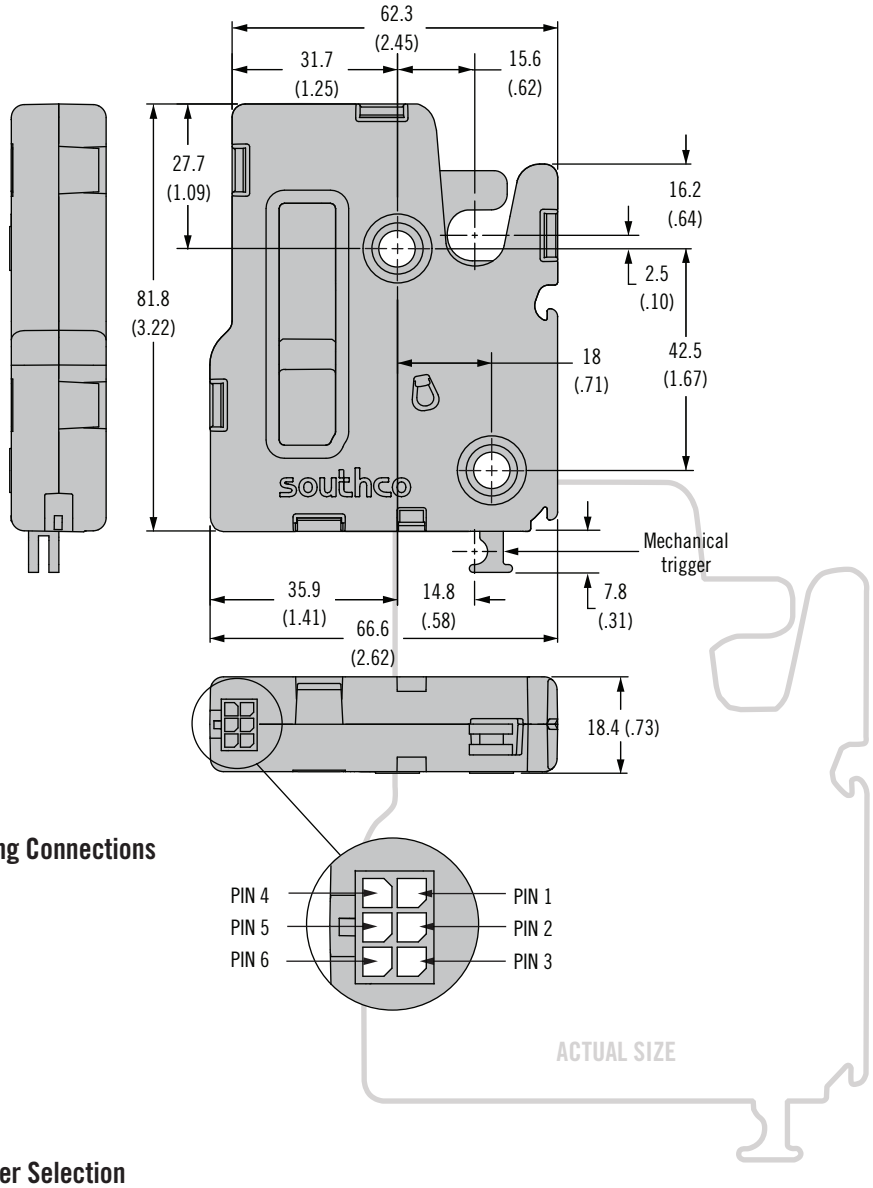

Latch Wiring Connections

Part Number Selection

R4 - EM - 9 [T] [B] [A] - 150 - [P]

[P] Packaging Options
- **None** Individually packaged
- **1** Bulk packaged

[T] Trigger Styles
- **A** Auto relock, rear trigger, with kick-out spring
- **D** Delayed relock, rear trigger, with kick-out spring
- **P** Delayed relock, rear trigger, pull to open

[A] Alternate Configurations
- **None** Plastic housing
- **5** Metal Housing

[B] Base Mounting Style
- **1** 1/4 - 20 thread
- **2** M6 thread
- **3** Ø 7.0 (.27) thru hole

Dimensions in millimeters (inch) unless otherwise stated

Installation

Panel Preparation

Base Mounting Style	Recommended minimum mounting hole
1/4-20 thread	Ø 7.2 (.283)
M6 thread	Ø 6.9 (.272)
Thru hole	Ø 7.6 (.300)

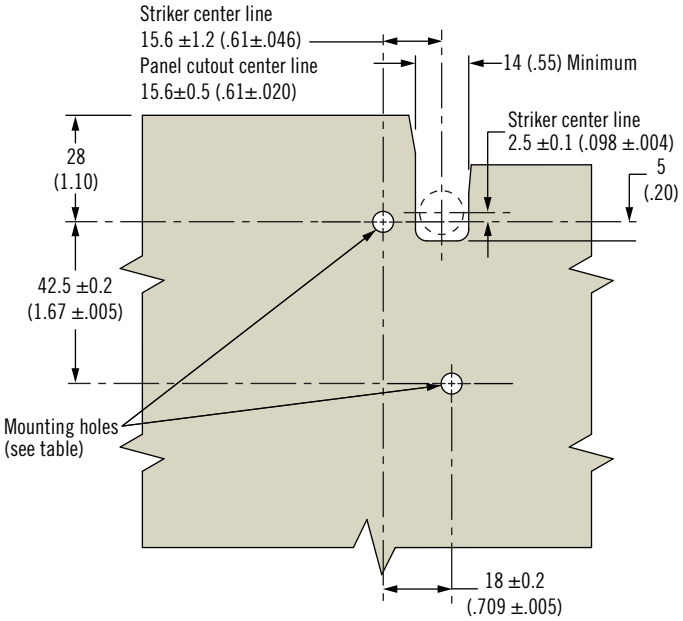

Operation

See page 21 for operating instructions

Accessories

Striker Bolt or Cast Striker

See page 36

Cable Mounting Kit

See page 37

Electronic Actuators

See page 48

Mechanical Actuators

See page 34

Cables

See page 322

Wiring/Junctions

See *www.southco.com*

Material & Finish

Top Housing: PC/ABS or Aluminum
Bottom Housing: PC/ABS or Zinc, Die Cast
Pivot Pins: Steel, zinc plated
Cam, Trigger: Steel, sealed
Springs: Stainless steel passivated
Trigger Interlock Lever: Glass-filled nylon
Bistable Spring Retainer: Zinc Alloy
Drive Cam: Acetal, black
Output Cam: Acetal, white

Electrical Specifications

Recommended Operating Voltage:
12 to 24 VDC
Typical Operating Current :
12 V Models: Less than 500mA

Latch Connector Pin Assignment

PIN 1: Ground (-)
PIN 2: Power (+)
PIN 3: Control Signal
PIN 4: Latch Status
PIN 5: None
PIN 6: Door status

R4-EM 8 Series Electromechanical Rotary Lock

Door sensor option · Extended housing option
Electronic access without internal motor control

- Push-to-close, electronic release
- Auto relock functionality
- Minimal power draw
- Integrated connector
- Extended housing option for added security
- Optional door sensor
- Microswitch to detect latch status
- Mechanical over-ride with integrated cable bracket
- Efficient DC motor actuation
- Simple two-hole installation

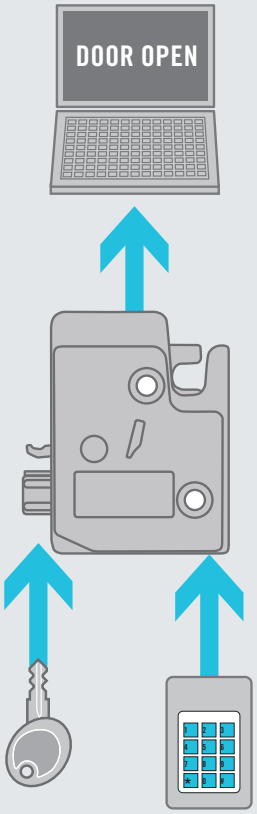

Extended Housing

This version is required when using door sensor.

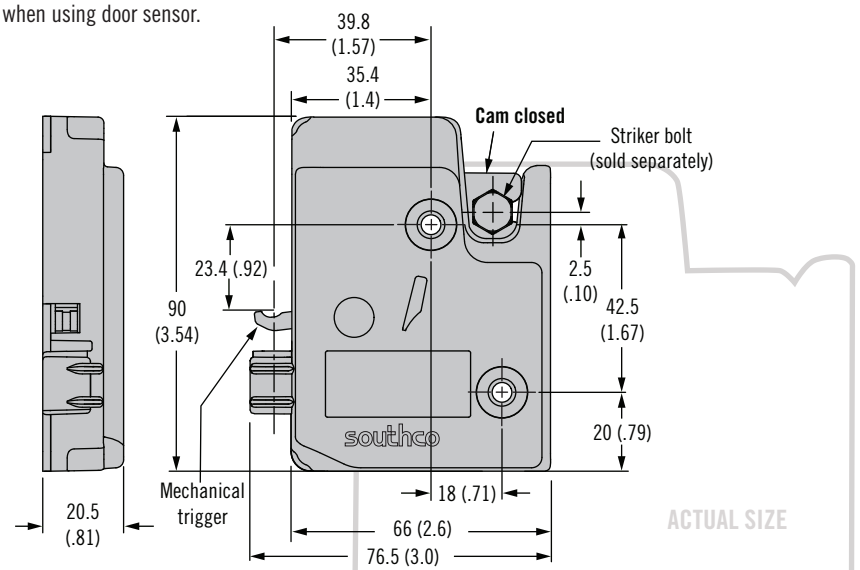

Standard Housing

(Dimensions are the same as above, except as noted.)

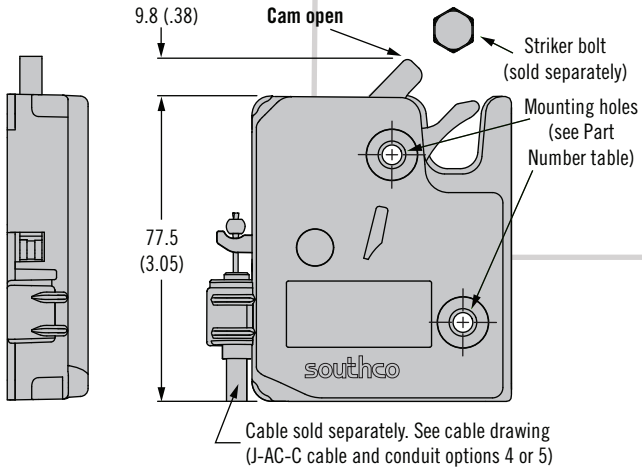

Part Number Selection

R4 - EM - 8 [B] [A] - [V] [S] 0 - [P]

[P] Packaging Options
- **None** Individually packaged
- **1** Bulk packaged

[B] Base Mounting Style
- **1** 1/4-20 thread
- **2** M6 thread
- **3** Ø 7.0 (.27) thru hole

[S] Integrated Door Sensor
- **3** No
- **4** Yes (Extended housing only)

[A] Housing Configurations
- **None** Standard housing
- **6** Extended housing

[V] Voltage
- **2** 24 volts
- **3** 12 volts

Dimensions in millimeters (inch) unless otherwise stated

Installation

Panel Preparation

Base Mounting Style	Recommended minimum mounting hole
1/4-20 thread	Ø 7.2 (.283)
M6 thread	Ø 6.9 (.272)
Thru hole	Ø 7.6 (.300)

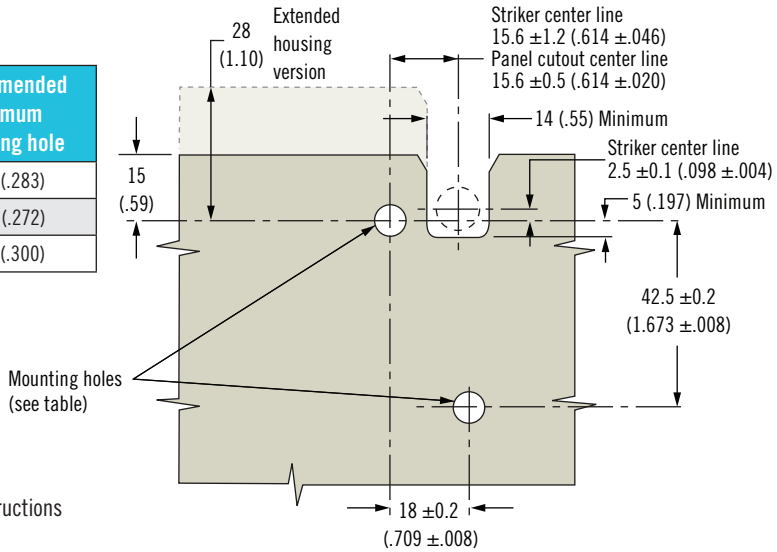

Operation

See page 21 for operating instructions

Accessories

Striker Bolt or Cast Striker

See page 36

Electronic Actuators

See page 48

Mechanical Actuators

See page 34

Cables

See page 322

Wiring/Junctions

See *www.southco.com*

Material & Finish

Top housing: Nylon
Gearbox cover: PC/ABS
Bottom housing, Pivot pins,
Screws: Steel, zinc plated
Cam, Trigger: Steel, sealed
Gears: Acetal
Pin, Springs: Stainless steel

Electrical Specifications

Recommended Operating Voltage:
- 12 V Models: 8 to 14 VDC
- 24 V Models: 21 to 26 VDC

Typical Operating Current :
- 12 V Models: Less than 200mA
- 24 V Models: Less than 100mA

Latch status switch: 1A Maximum

Latch Connector Pin Assignment

PIN 1: Power
PIN 2: Ground (-)
PIN 3: None
PIN 4: Latch status signal

R4-EM 5 & 7 Series Electronic Rotary Latch

Sealed motor · Stainless steel housing option
Electronic access with internal motor control

- Motor actuator sealed against water and dust ingress to IP56
- Corrosion resistant plated-steel and stainless steel options
- Push-to-close, electronic release
- Versatile rotary mechanism
- Concealed latching
- Microprocessor control
- Auto or delayed relock functionality
- Minimal power draw
- Optional internal micro-switch for latch status
- Simple mechanical over-ride

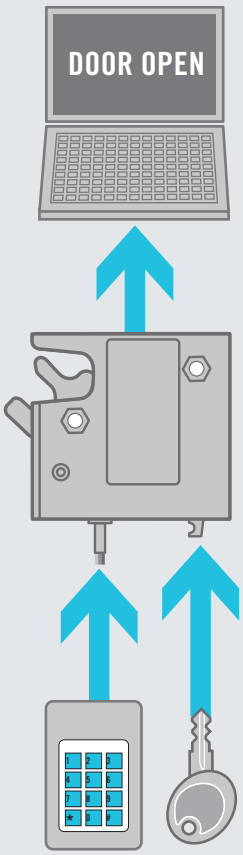

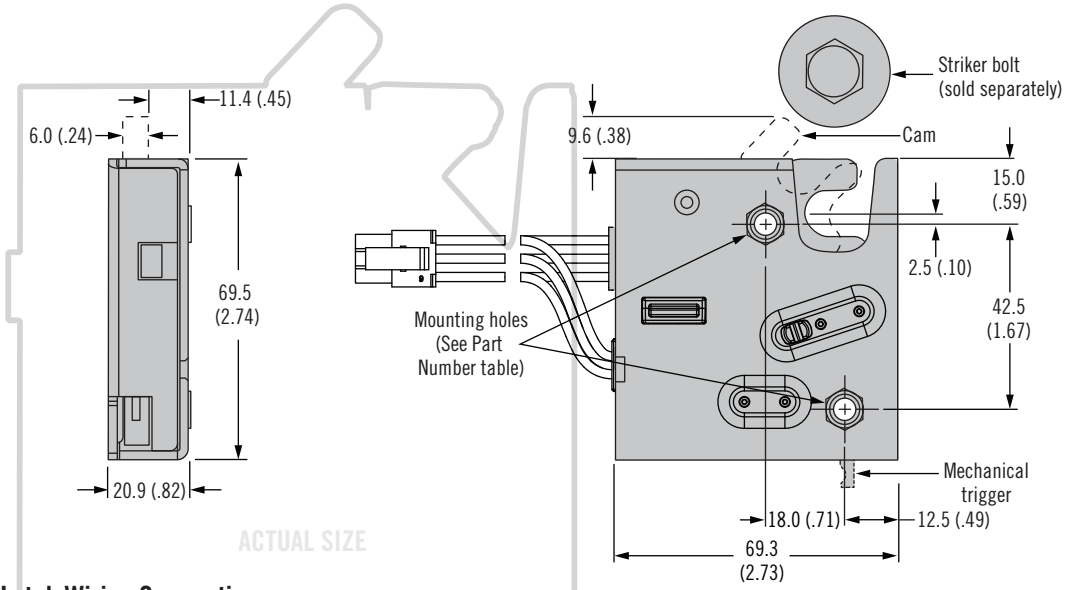

Latch Wiring Connections

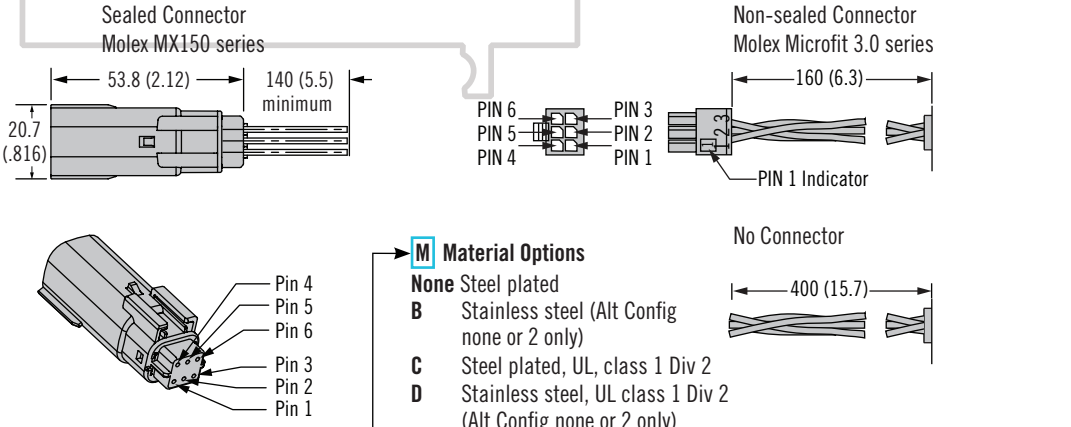

M **Material Options**

None Steel plated
B Stainless steel (Alt Config none or 2 only)
C Steel plated, UL, class 1 Div 2
D Stainless steel, UL class 1 Div 2 (Alt Config none or 2 only)

Part Number Selection

R4 - EM - T B A -1 S C - P M

T **Trigger Style**

5 Auto re-lock, side trigger, with kick-out spring
7 Delayed re-lock, side trigger, with light spring
R5 Auto re-lock, rear trigger, with kick-out spring
R7 Delayed re-lock, rear trigger, with light spring

B **Base Mounting Style**

1 1/4-20 thread
2 M6 thread
3 Ø 7.0 (.27) thru hole

A **Alternate Configurations**

None Standard configuration
2 Strong (kick out) cam spring (delayed relock)
3 High strength cam (steel cam only) **M** = none only
4 High strength cam with strong (kick out) cam spring (delayed relock, steel cam only) **M** = none only

P **Packaging Options**

None Individually packaged
1 Bulk packaged

C **Connector Options**

1 Non-sealed connector
2 No connector (stripped and tinned)
3 Sealed connector

S **Switch Options**

3 No switch
6 Internal latch status switch

Dimensions in millimeters (inch) unless otherwise stated

southco®

Installation

Panel Preparation

Base Mounting Style	Recommended minimum mounting hole
1/4-20 thread	Ø 7.2 (.283)
M6 thread	Ø 6.9 (.272)
Thru hole	Ø 7.6 (.300)

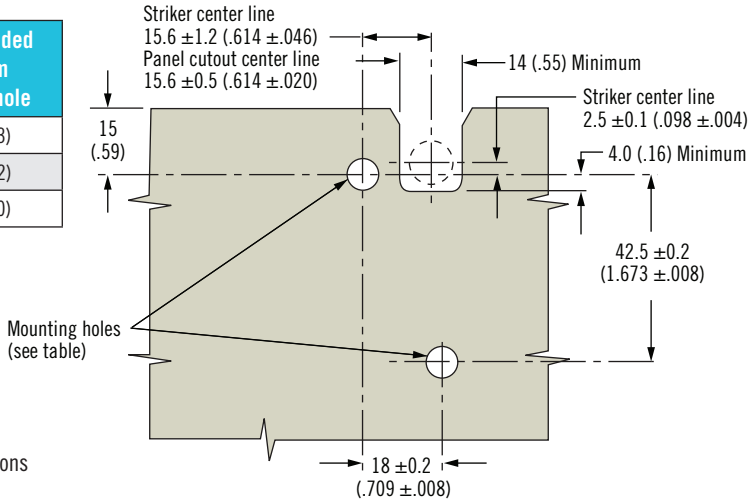

Operation

See page 21 for operating instructions

Accessories

Striker Bolt or Cast Striker

See page 36

Cable Mounting Kit

See page 37

Electronic Actuators

See page 48

Mechanical Actuators

See page 34

Cables

See page 322

Wiring/Junctions

See *www.southco.com*

Material & Finish

Mechanism
Housing, Cam, Trigger, Pins: Zinc nickel plated steel or stainless steel
Springs: 300 Series stainless steel
Electronic Actuator
Housing: PC/ABS
Bellows, Wire seal: Silicone
Perimeter Seal: Buna
Cams: Acetal
Grommet: TPE

Electrical Specifications

Recommended Operating Voltage: 12 to 24 Volt DC
Typical Operating Current (average at no load): Less then 600mA at 12 VDC
Input Signal Current Draw: 25mA Maximum at 24 VDC
Micro-switch Rating: 3A Maximum at 12VDC

Wire Color Code / Connector Pin Assignment:

PIN 1: Brown: Ground (-)
PIN 2: Red: Power 12 to 24 Volts DC
PIN 3: Orange: Control Signal 12 to 24 Volts DC
PIN 4: Black: Microswitch Common
PIN 5: Blue: Microswitch N.O. Contact
PIN 6: Grey: Microswitch N.C. Contact

R4-EM 4 & 6 Series Electronic Rotary Latch

Compact size · Lightweight
Electronic access with internal motor control

- Light weight construction
- Auto re-lock and delayed re-lock version
- Push-to-close, electronic release
- Versatile rotary mechanism
- Concealed latching
- Microprocessor control
- Minimal power draw
- Simple mechanical over-ride
- Optional internal microswitch for latch open/close output signal

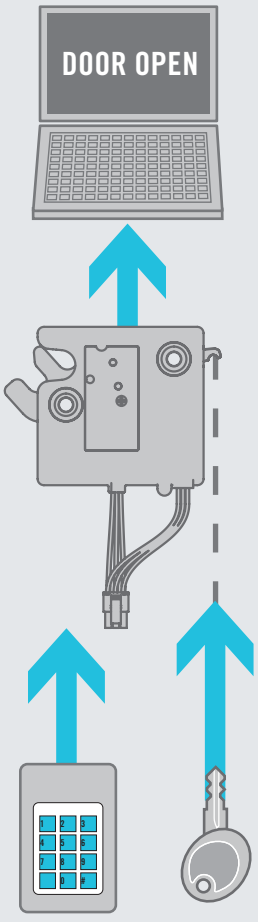

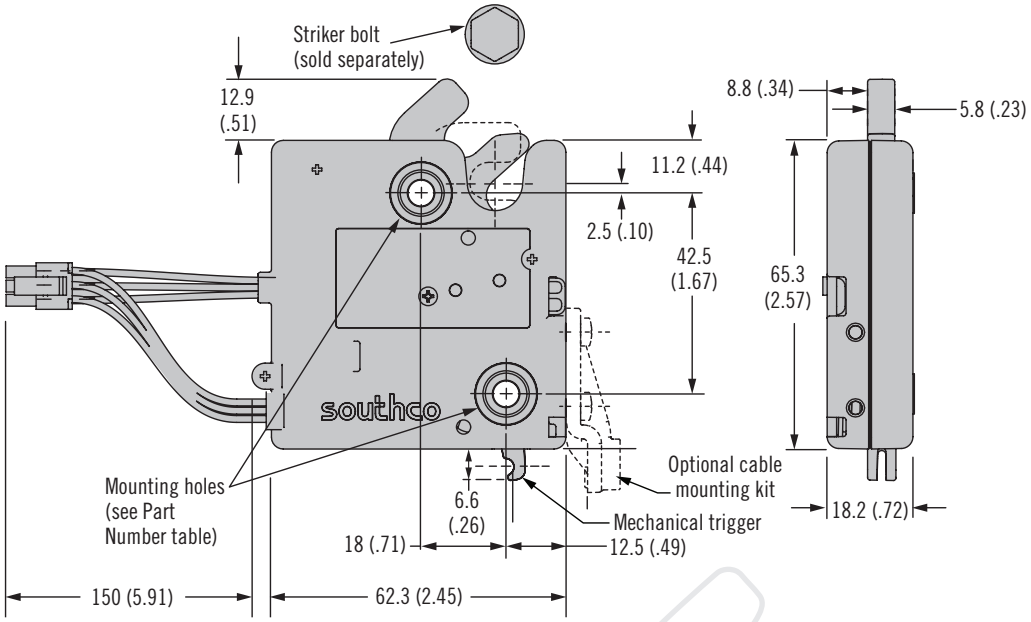

Latch Wiring Connections

With Connector
Molex Microfit 3.0 series

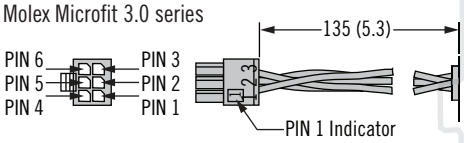

Without connector

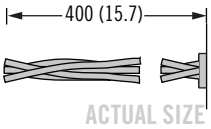

Part Number Selection

R4 - EM - T B A - 1 S C - P

T Trigger Styles
- **4** Auto re-lock with kick-out spring
- **6** Delayed re-lock with light spring

B Base Mounting Style
- **3** Ø 5.5 (.22) thru hole
- **4** M5 thread
- **5** 10-24 thread

A Alternate Configurations
- **None** Standard configuration
- **2** Strong (kick out) cam spring (delayed relock)

S Switch Options
- **3** No switch
- **6** Internal latch status switch

C Connector Options
- **1** With connector
- **2** Without connector

P Packaging Options
- **None** Individually packaged
- **1** Bulk packaged

Dimensions in millimeters (inch) unless otherwise stated

Installation

Panel Preparation

Base Mounting Style	Recommended minimum mounting hole
10-24 thread	Ø 5.6 (.220)
M5 thread	Ø 5.9 (.232)
Thru hole	Ø 6.1 (.240)

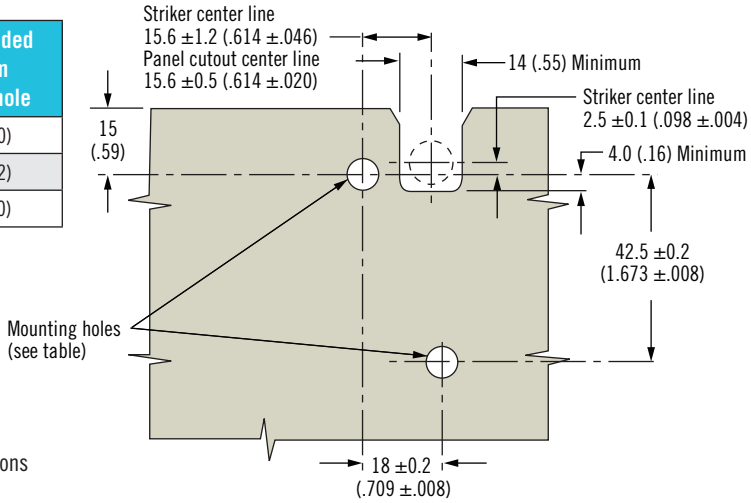

Operation

See page 21 for operating instructions

Accessories

Striker Bolt
See page 36

Cable Mounting Kit
See page 37

Electronic Actuators
See page 48

Mechanical Actuators
See page 34

Cables
See page 322

Wiring/Junctions
See *www.southco.com*

Material & Finish

Housings: PC/ABS
Cam: Glass-filled nylon
Trigger: PBT
Springs: Stainless Steel
Pins: Steel, zinc plated

Electrical Specifications

Recommended Operating Voltage: 12 to 24 VDC
Typical Operating Current (average at no load): Less than 600mA at 12VDC
Input Signal Current Draw: 25mA Maximum
**Optional microswitch closes upon latch closure
Microswitch Rating: 3A Max at 12 VDC

Wire Color Code / Connector Pin Assignment:

PIN 1: Brown: Ground (-)
PIN 2: Red: Power 8 to 26 Volts DC
PIN 3: Orange: Control Signal 8 to 26 Volts DC
PIN 4: Black: Microswitch Common
PIN 5: Blue: Microswitch N.O. Contact
PIN 6: Grey: Microswitch N.C. Contact

R4-EM 1 & 2 Series Electronic Rotary Latch

All-metal construction

Electronic access with internal motor control

- High strength, steel construction
- Operates against high mechanical loads
- Push-to-close, electronic release
- Versatile rotary mechanism
- Concealed latching
- Microprocessor control
- Minimal power draw
- Simple mechanical override
- Optional internal microswitch for latch open/close output signal

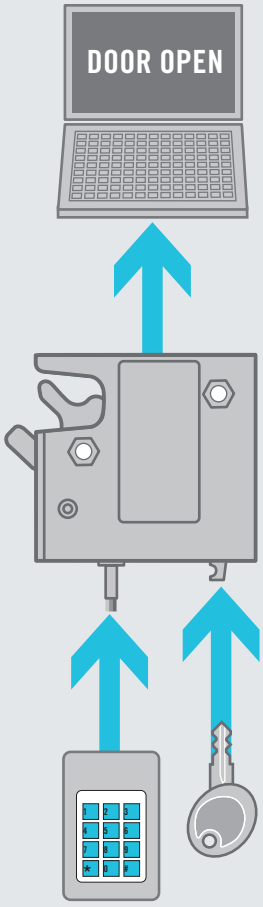

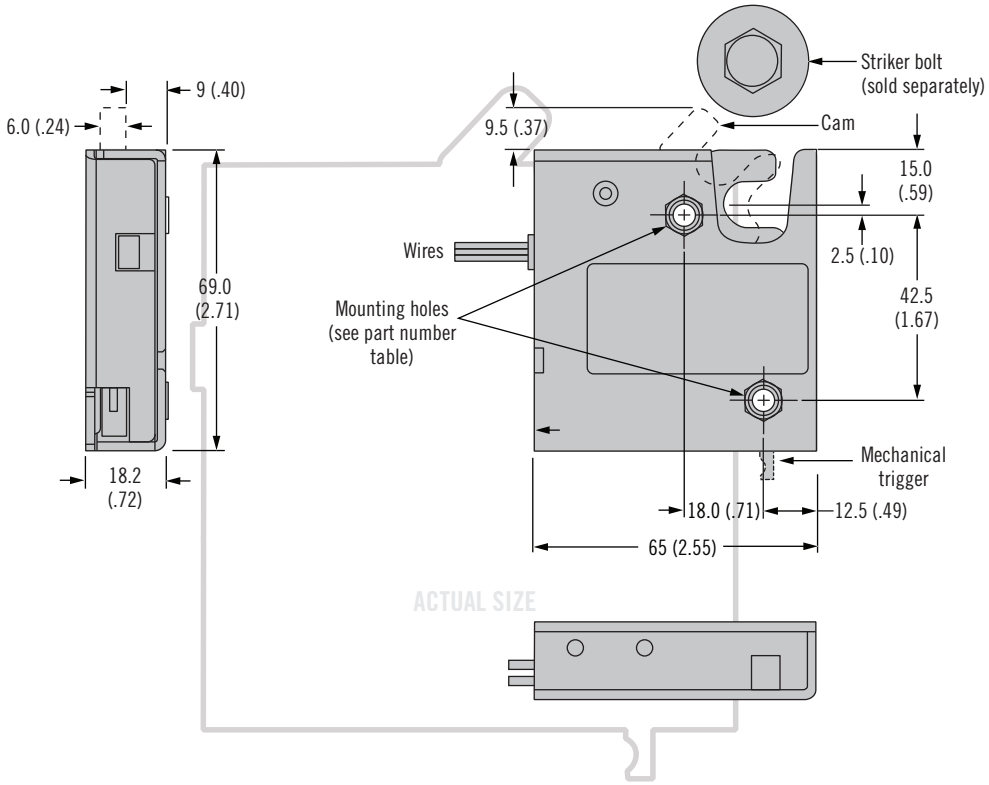

Latch Wiring Connections

With connector
Molex Microfit 3.0 series

Without connector

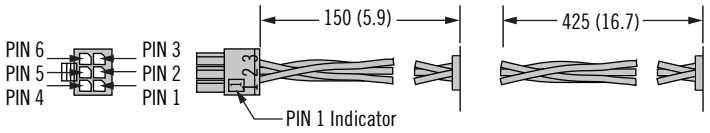

Part Number Selection

R4 - EM - T B A - 1 S C - P

T Trigger Styles
- **1** Auto relock, side trigger, with kick-out spring
- **2** Delayed relock, side trigger, with light spring
- **R1** Auto relock, rear trigger, with kick-out spring
- **R2** Delayed relock, rear trigger, with light spring

B Base Mounting Style
- **1** 1/4 - 20 thread
- **2** M6 thread
- **3** Ø 7.0 (.27) thru hole

A Alternate Configurations
- **None** Standard configuration
- **2** Strong (kick out) cam spring (delayed relock)
- **3** High strength cam
- **4** High strength cam with strong (kick out) cam spring (delayed relock)

P Packaging Options
- **None** Individually packaged
- **1** Bulk packaged

C Connector Options
- **1** With connector
- **2** Without connector

S Switch Options
- **3** No switch
- **6** Internal latch status switch

Dimensions in millimeters (inch) unless otherwise stated

southco®

Installation

Panel Preparation

Base Mounting Style	Recommended minimum mounting hole
1/4-20 thread	Ø 7.2 (.283)
M6 thread	Ø 6.9 (.272)
Thru hole	Ø 7.6 (.300)

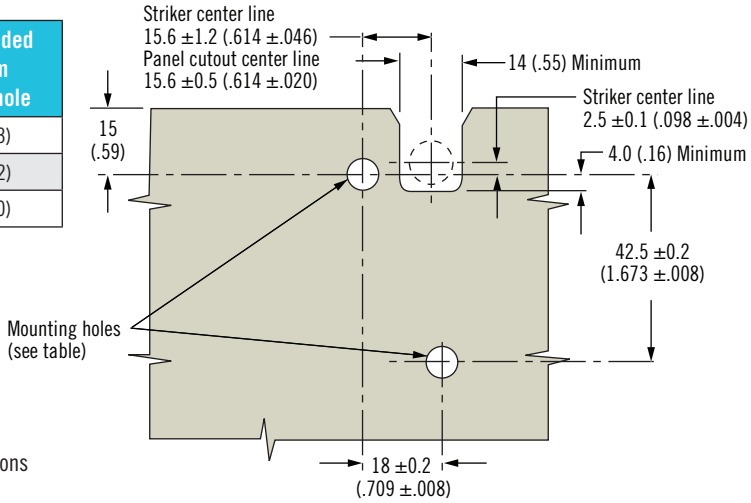

Operation

See page 21 for operating instructions

Accessories

Striker Bolt or Cast Striker

See page 36

Cable Mounting Kit

See page 37

Electronic Actuators

See page 48

Mechanical Actuators

See page 34

Cables

See page 322

Wiring/Junctions

See *www.southco.com*

Material & Finish

Mechanism
Housing: Steel, zinc plated
Cam, trigger: Steel, zinc plated
Springs: 300 Series stainless steel
Pins: Steel, zinc plated

Electronic Actuator:
Housing: PC/ABS
Cam / follower: Acetal

Electrical Specifications

Recommended Operating Voltage: 12 to 24 Volt DC
Typical Operating Current: Less than 500mA at 12 VDC
Peak/Stall Operating Current: 1 A
Standby Current: 185uA
Input Signal Current Draw: 25mA
**Optional microswitch closes upon latch closure
Microswitch Rating: 3A at 12VDC Maximum

Wire Color Code / Connector Pin Assignment:

PIN 1: Brown: Ground (-)
PIN 2: Red: Power 8 to 26 Volts DC
PIN 3: Orange: Control Signal 8 to 26 Volts DC
PIN 4: Black: Microswitch Common
PIN 5: Blue: Microswitch N.O. Contact
PIN 6: Grey: Microswitch N.C. Contact

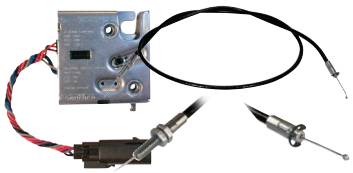

R4-EM Mechanical Override System

- **Adapts to any standard Southco R4-EM Electronic Rotary Latch**
- **Choose from flat key or tubular key cam latch for remote key lock**
- **Simple installation with multiple adjustments and customized cable lengths to suit any application.**
- **Accommodates clockwise or counter clockwise key rotation for latch release**

Southco now offers a standard solution for remote mechanical actuation of the R4-EM Electronic Rotary Latch. The cable based solution provides a simple means of mechanically releasing the electronic lock in the event of electrical power loss providing fully redundant access.

Installation

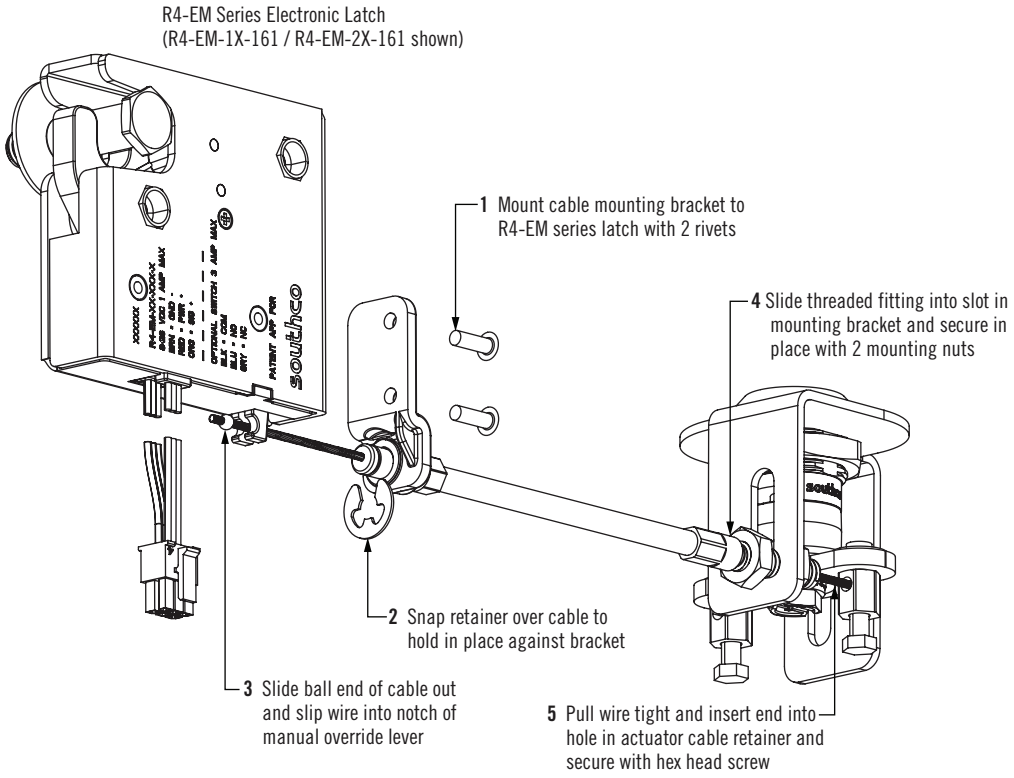

PT Latch Option See Pages 202 - 203

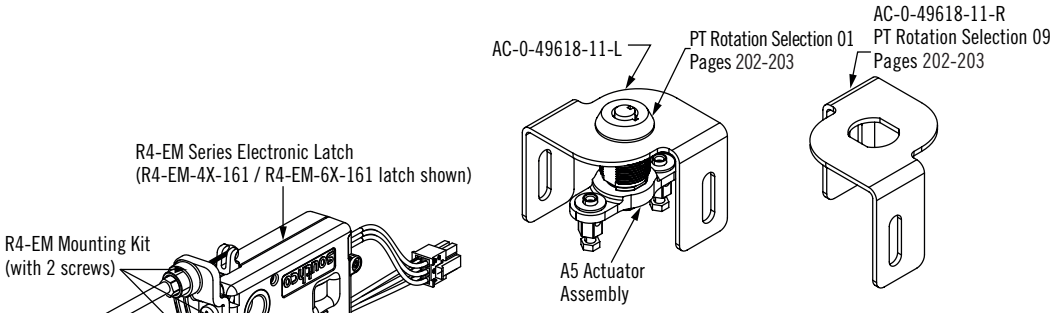

E5 Push to Close Option See Pages 166 - 167

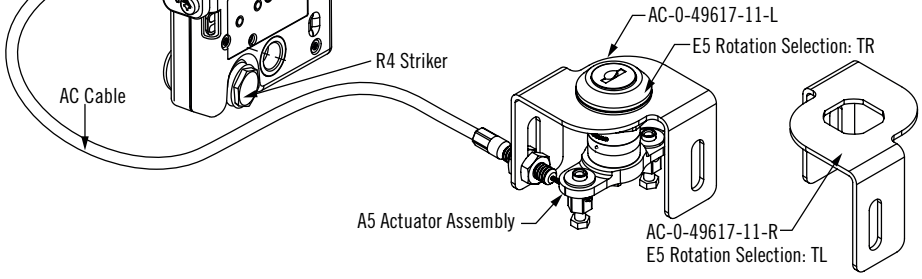

Dimensions in millimeters (inch) unless otherwise stated

southco®

How to Order

Step 1 Select mechanical override lock and corresponding AC actuator assembly and AC cable bracket

E5 Latch
Push-to-Close assembly
See page 166
See drawing J-E5-53-A

Description	Part Number		Latch Rotation Selection
A5 Actuator	A5-99-136	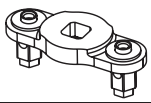	
AND			
AC Cable Bracket	AC-0-49617-11-R	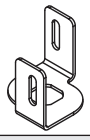	E5-T-LF-TL-1K See pages 166 - 167
OR			
AC Cable Bracket	AC-0-49617-11-L		E5-T-LF-TR-1K See pages 166 - 167

PT Latch
Tubular Key cam Lock
See page 202
See drawing J-PT-1

Description	Part Number		Latch Rotation Selection
A5 Actuator	A5-99-157	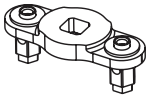	
AND			
AC Cable Bracket	AC-0-49618-11-R	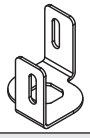	PT-1-HC109-20K-KC See pages 202 - 203
OR			
AC Cable Bracket	AC-0-49618-11-L		PT-1-HC101-20K-KC See pages 202 - 203

Step 2 Determine mechanical cable length required

Mechanical Cable See drawing J-AC-C	AC-C0H0-4-LLLL-TTT	LLLL - Length from behind ball end to end of cable TTT - Raw cable extension portion of LLLL length	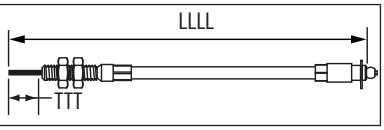

Step 3 Order cable mounting kit (one per R4-EM latch). See page 37 to select the kit to match your application.

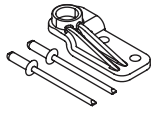	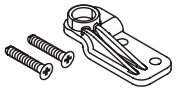	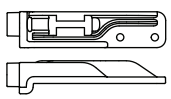	
R4-EM-52	R4-EM-72	R4-EM-87	R4-EM-952

R4-EM Electronic Rotary Latch

Strikers

Material and Finish

Striker bolts: Steel, zinc plated or stainless steel
Cast strikers: Zinc alloy

***Note:** Latch and striker installation details can be found on the latch trade drawing at www.southco.com.

Striker Bolt - Large
Part number R4-90-121-10
R4-90-121-20

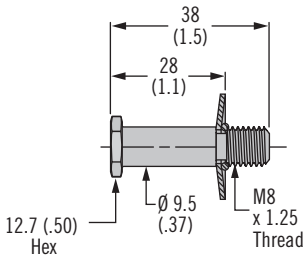

Striker Bolt - Small
Part number R4-90-511-20

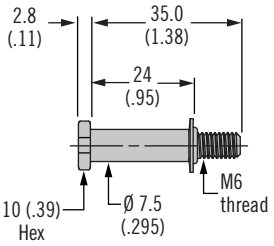

Cast Striker with Door Sensor Part number R4-90-804-10*
Cast Striker without Door Sensor Part number R4-90-800-10*

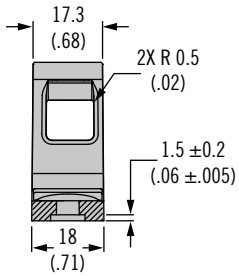

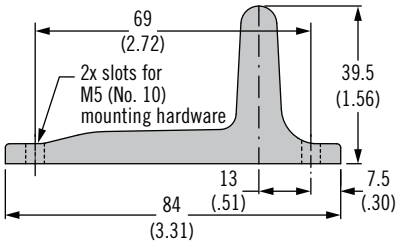

	Striker Bolt		Cast Striker	
	R4-90-121-XX	R4-90-511-20	R4-90-800-10	R4-90-804-10
R4-EM-9	✔		✔	✔
R4-EM-8	✔		✔	✔
R4-EM-5 & 7	✔		✔	
R4-EM-4 & 6		✔		
R4-EM-1 & 2	✔		✔	

Dimensions in millimeters (inch) unless otherwise stated

Cable Mounting Kit
Part number R4-EM-52 – Rivets included
Part number R4-EM-72 – Screws included

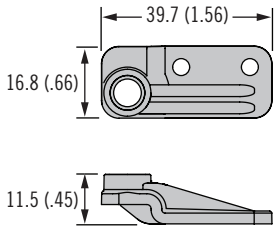

Part number R4-EM-87 – Rivets included

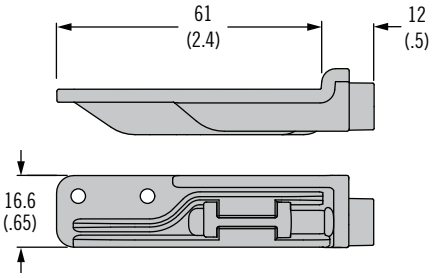

Part number R4-EM-952

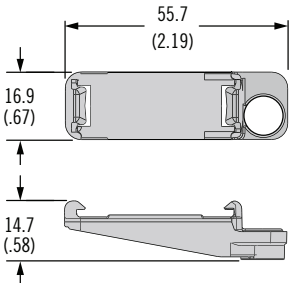

	Cable Mounting Kit			
	R4-EM-52	R4-EM-72	R4-EM-87	R4-EM-952
R4-EM-9				✔
R4-EM-8				
R4-EM-5 & 7	✔		✔	
R4-EM-4 & 6		✔		
R4-EM-1 & 2	✔		✔	

Material and Finish

Cable mounting kits: Glass-filled nylon, black

***Note:** Latch and striker installation details can be found on the latch trade drawing at www.southco.com.

H3-EM Modular Electronic Swinghandle

Modular Access Control Options
Single or multi-point latching

- **Remote lock and unlock**
- **Momentary or continuous lock actuation**
- **Local monitoring with multi-color LED indicator**
- **Lock status outputs for remote monitoring**
- **Industry standard 25x150mm panel prep - kits for other panel preps available**
- **Integral key lock for manual over-ride**
- **Combine with easy install modular Reader (See EA-P5-30XXX RFID Card Readers.**

12V

24V

Material & Finish

Glass-filled nylon (UL94-V0), Black and PC/ABS (UL94-V0), Black
Shaft, Rotation Limiter: Zinc alloy, zinc plated and chromate

Electronic Swinghandle

Recommended operating voltage: 12VDC to 24 VDC
Typical operating current: less than 200mA at 12VDC
Peak/stall operating current: 1 Amp
Standby current: 50mA max Output signal: 100 mA max load

To Order:

1 Select required Electronic Swinghandle part number using selection guide.

2 Select card reader (EA-P5-30XXX)

3 Select cam part number using cam part number table

4 For multi-point applications, select optional gear box/rod adapters or actuator plates

5 Select optional wire harness

6 Select mechanical override keys.
P/N: PK-99-198-01 For HS DIN Lock
P/N: PK-10-01 for CH-751
P/N: PK-10-01-KR001

Contact Southco for details on access control options

www.southco.com/H3-EM

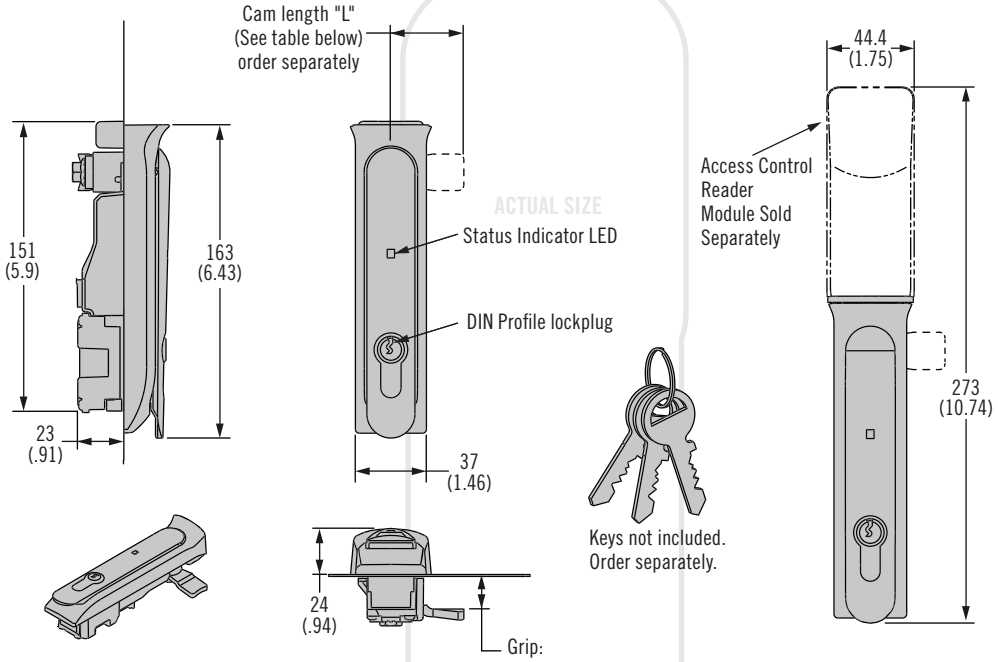

Part Number Selection

H3 - EM - 70000 - LLL

LLL Lock style

000 No lock or keys
001 Blank lockplug: Bright Chrome
003 Blank lockplug: Black powder coat
100 High security DIN lock
200 Key code CH751
300 Key code RS001 (Multiple RS key codes available)

Rod Systems

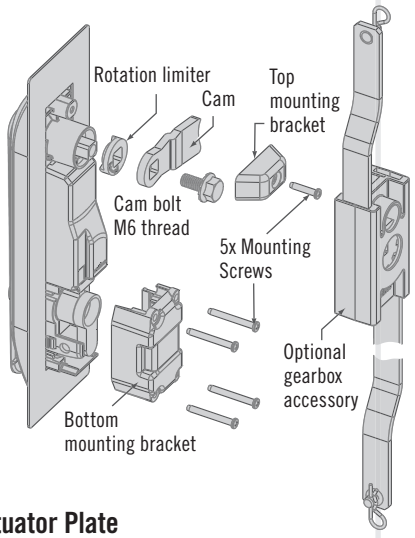

Actuator Plate

Cam Part Number (Order seperately)		
Grip	Short Cam L=38 (1.5)	Long Cam L=45 (1.77)
15.5 (.61)	E5-6710	-
17.5 (.69)	E5-6711	-
19.5 (.77)	E5-6712	E5-6112
21.5 (.85)	E5-6713	E5-6113
23.5 (.93)	E5-6714	E5-6114
Other additional offsets: (1) See Southco Drawings J-E5-67-A & J-E5-67-B (2) See Southco Drawings J-E5-61-A & J-E5-61-B		

Rod System Part Numbers (order seperately)†	
H3-61-55-33	Left Hand Gearbox (CCW to open)
H3-61-56-33	Right Hand Gearbox (CW to open)
A5-90-105-11	Actuator Plate

† For multi-point systems, select either the right or left hand gear box part number and rod adaptor (2 per door) part numbers or the actuator plate part number from table, then visit www.southco.com/A5 for rod selection.

Dimensions in millimeters (inch) unless otherwise stated

Dual Frequency Reader Now Available

H3-EM Modular Access Control Readers

Meet evolving security requirements

- **Readers recognize existing employee 125kHz or 13.56 MHz RFID cards**
- **Readers interchangeable and all fit H3-EM Modular Swinghandles.**
- **Order separately from Swinghandle**

Card Reader Module

Supply Voltage: 12 VDC to 24 VDC
EA-P5-30200 Series Only at 12 VDC +/-10%
Operating Current: 200mA Max

Material & Finish

Glass-filled nylon (UL94-V0), Black, Polycarbonate, Clear Screws: Steel, zinc plated

Notes

*See specific Reader drawings at southco.com for compatible card types
**MIFARE, MIFARE Classic, MIFARE Plus, and MIFARE DESfire are trademarks of NXP B.V.
***HID iClass is a registered trademark of HID Global

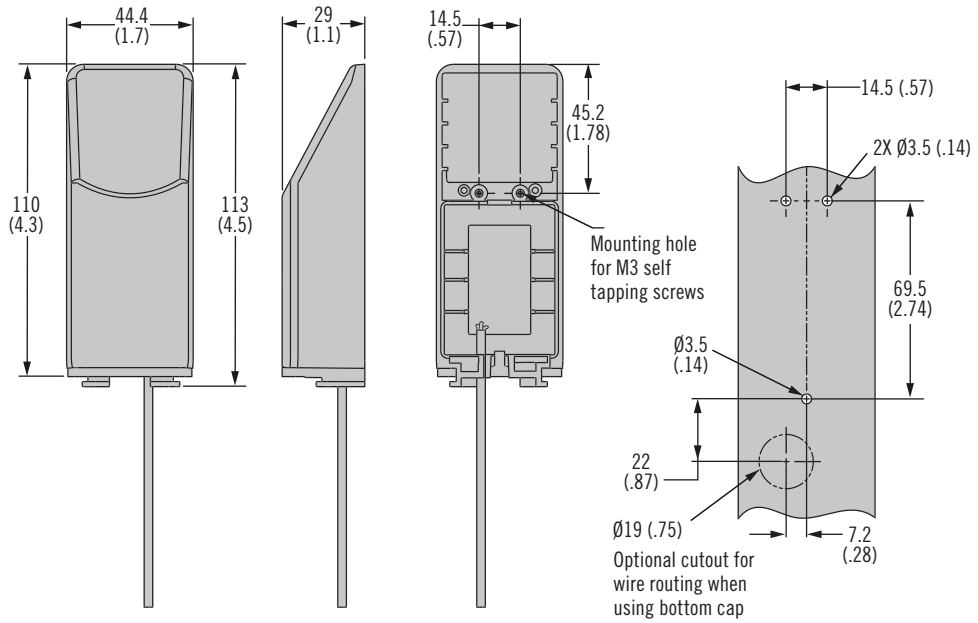

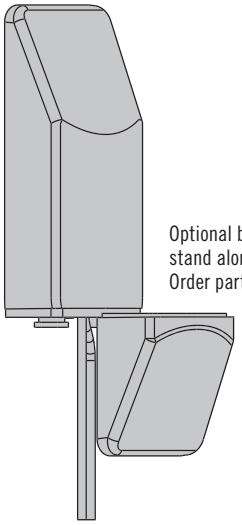

Optional bottom cap for stand alone reader use.
Order part # EA-P5-300-31

Modular Electronic Swinghandle
Sold Separately

Additional reader options available contact southco for details.

EA - P5 - 30 R 00

R Compatible Card Type Default †** PACS = Physical Access Control System UID = Unique Identifier CSN = Card Serial Number							Output
R	*MIFARE*® Classic 4k	*MIFARE* Plus® 2k	*MIFARE*® DESFire® 4k	*HID*® iCLASS	HID® 125kHz Prox	EM 125kHz Prox	Wiegand
2	UID	UID	UID	UID	CSN		✔
6	UID	UID	UID	UID			✔
8					CSN		✔

Card Part Numbers
EA-C2-021-9 (*HID*® 125kHz card, 26bit, 1.8 (0.07) thick)**
EA-C3-101-9 (*MIFARE*® Classic 1k card, 4B CSN, 0.8 (0.03) thick)**

H3-EM Electronic Locking Swinghandle

RFID card reader option · Latch status indicator
Single or multi-point latching

SEOS Support Now Available

12V
24V

- **Remote lock and unlock**
- **Momentary or continuous lock actuation**
- **Local monitoring with multi-color LED indicator**
- **Lock status outputs for remote monitoring**
- **Industry standard 25x150mm panel prep - kits for other panel preps available**
- **Integral key lock for manual over-ride**
- **Options for combined electronic lock and RFID card reader**
- **Reader recognizes existing employee 125kHz or 13.56 MHz RFID cards**
- **Multifactor readers available - contact Southco for details**

Notes

† See specific latch trade drawings for compatible card types

‡ PACS for *MIFARE* Classic 4k SE only

** *MIFARE*, *MIFARE* Classic, *MIFARE* Plus and *MIFARE* DESFire are trademarks of NXP B.V.

** *HID* iCLASS is a registered trademark of HID Global.

***Remove '-10' for latch without Southco Logo

Connection Diagram

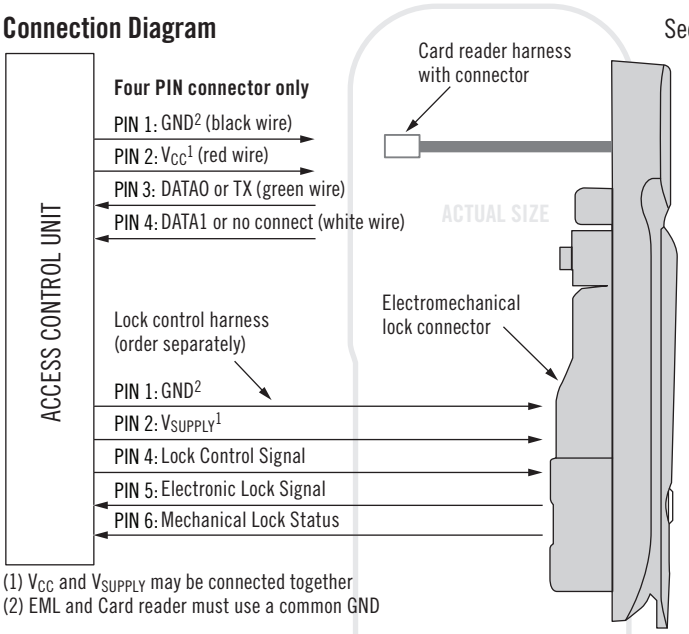

(1) V_{CC} and V_{SUPPLY} may be connected together
(2) EML and Card reader must use a common GND

See Reader Connector options in table

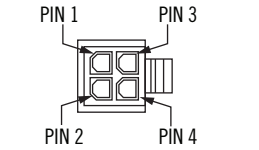

4 PIN - See Connection Diagram

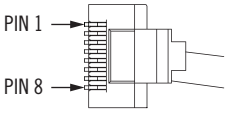

RJ45 - See www.southco.com for PIN output details

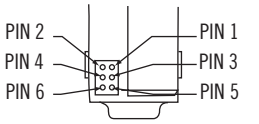

Electromechanical lock connector

5 Meter* Wire Harnesses (order separately) *Contact Southco for other lengths			
Part Number	**Latch Output**	**Termination**	**For R=**
EA-W01-500	From Swinghandle	to Stripped and Tinned End	0
EA-W23-503	From Wiegand or Output Card Reader	to Stripped and Tinned End	2, 6, 8
EA-W01-23-507	From Swinghandle and Card Reader	to Stripped and Tinned End	2, 6, 8
EA-W01-23-507-03	From Swinghandle and Card Reader	to Hirose 8-Pin Connector	2, 6, 8
EA-W01-52-506-52-A	From Swinghandle and Card Reader	to RJ45 Connector	4, 5
EA-W01-52-506-A	From Swinghandle and Card Reader	to Stripped and Tinned End	4, 5

Part Number Selection

H3 - EM - 6 [R] - [LLL] - 10***

[LLL] Lock style

000	No lock or keys	**100**	High security DIN lock
001	Blank lockplug: Bright Chrome	**200**	Key code CH751
003	Blank lockplug: Black powder coat	**300**	Key code RS001 (Multiple RS key codes available)

[R] Compatible Card Type Default † **PACS** = Physical Access Control System **UID** = Unique Identifier **CSN** = Card Serial Number							**Output**	**Reader Connector**	
R	***MIFARE*® Classic 4k**	***MIFARE* Plus® 2k**	***MIFARE*® DESFire® 4k**	***HID*® iCLASS**	**HID® 125kHz Prox**	**EM 125kHz Prox**	**Wiegand**	**4 PIN**	**RJ45**
2	UID	UID	UID	UID	CSN		✔	✔	
4	UID / PACS‡	UID	UID	PACS			✔		✔
5	UID /PACS‡	UID	UID	PACS	CSN	CSN	✔		✔
6	UID	UID	UID	UID			✔	✔	
8					CSN		✔	✔	
0	**Without Card Reader**								

Card Part Numbers

EA-C1-011-9	(EM 125 kHz Prox card, 26 bit, 1.8 (0.07) thick)
EA-C2-021-9	(*HID*® 125kHz card, 26bit, 1.8 (0.07) thick)**
EA-C3-101-9	(*MIFARE*® Classic 1k card, 4B CSN, 0.8 (0.03) thick)**

Dimensions in millimeters (inch) unless otherwise stated

Swinghandle with Card Reader

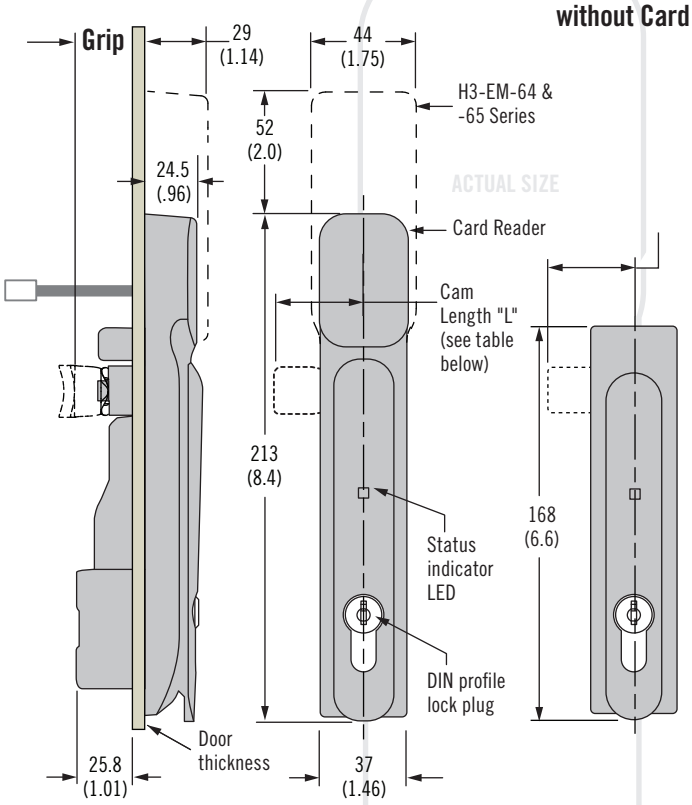

Swinghandle without Card Reader

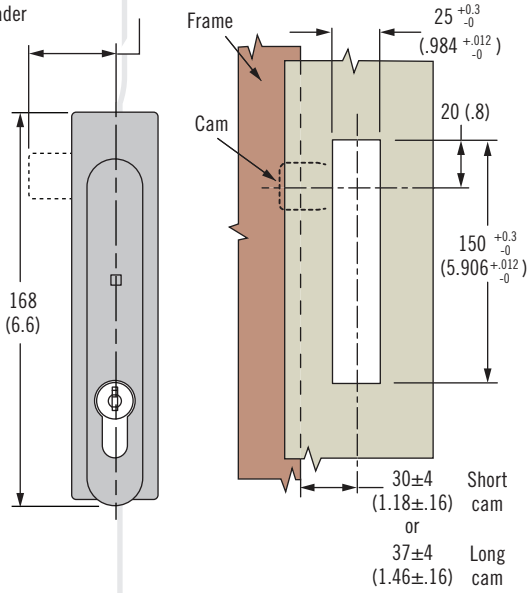

Rod Systems

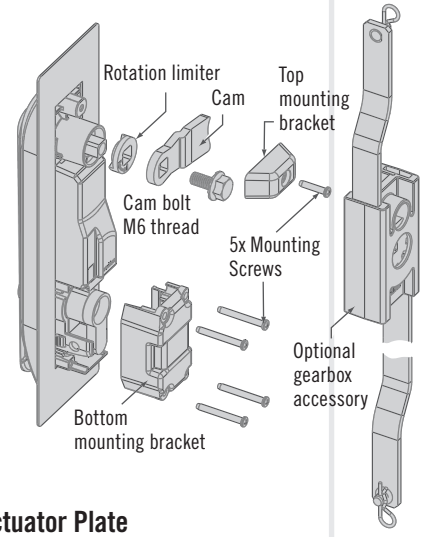

Actuator Plate

Cam Part Number (Order seperately)		
Grip	Short Cam L=38 (1.5)	Long Cam L=45 (1.77)
15.5 (.61)	E5-6710	-
17.5 (.69)	E5-6711	-
19.5 (.77)	E5-6712	E5-6112
21.5 (.85)	E5-6713	E5-6113
23.5 (.93)	E5-6714	E5-6114
Other additional offsets: (1) See Southco Drawings J-E5-67-A & J-E5-67-B (2) See Southco Drawings J-E5-61-A & J-E5-61-B		

Rod System Part Numbers (order seperately)†	
H3-61-55-33	Left Hand Gearbox (CCW to open)
H3-61-56-33	Right Hand Gearbox (CW to open)
A5-90-105-11	Actuator Plate

† For multi-point systems, select either the right or left hand gear box part number and rod adaptor (2 per door) part numbers or the actuator plate part number from table, then visit www.southco.com/A5 for rod selection.

Material & Finish

Glass-filled nylon, PC/ABS (UL94-V0)

Shaft, rotation limiter: Die-cast zinc, bright sealer

Electronic Swinghandle

Recommended operating voltage: 12VDC to 24VDC

Typical operating current:
Less than 200mA at 12VDC
Peak / stall operating current: 1 Amp
Standby current: 50mA Max
Output Signal: 100mA Max load

Card Reader Module

Supply voltage: 12VDC to 24VDC
H3-EM-62 Series Only at 12VDC ± 10%
Operating current: 200mA Max

To Order:

1 Select required Electronic Swinghandle part number using selection guide.

2 Select cam part number using cam part number table.

3 For multi-point applications, select optional gear box / rod adaptors or actuator plate.

4 Select optional wire harness.

5 Order cards as needed.

For standalone systems order Southco EA-P1-010 controller.

Contact Southco for details on ordering networked systems.

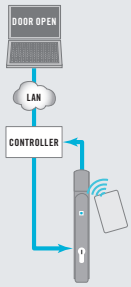

AC-EM-05 Electro-Mechanical Actuator

Push-style Actuator · Compact Size

- **Compact, low power, push only electrical actuator**
- **Versatile solution for implementing electrical actuation**
- **Economical upgrade for Southco R4-05 Rotary Latch from mechanical to electrical actuation**
- **Available with or without connector**

Material & Finish

Enclosure, Output Cam:
Nylon, Acetal; Black
Housing Assembly Screws:
Steel, zinc plated

Electrical Specifications

Supply Voltage: 5VDC +/- 10%

Operating Current:
Less than 300mA at 5VDC

Operating Temperature:
-20°C - 60°C

Notes

*Mount using the 3.25 dia through holes or with thread forming screws (M4) for plastic.

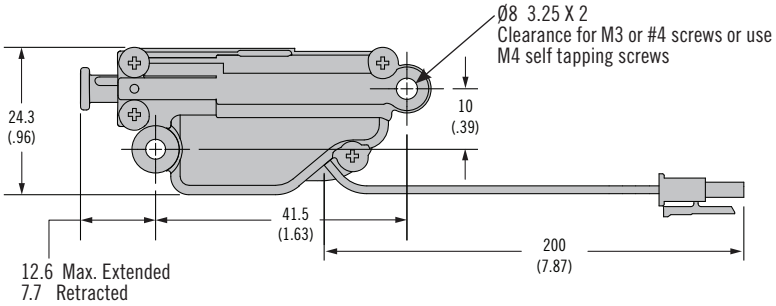

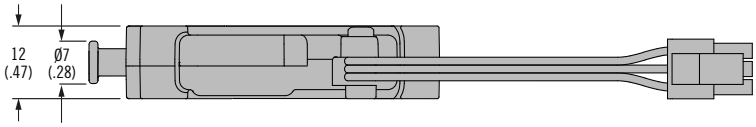

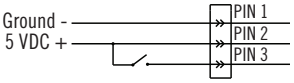

Control switch momentary on/off pulse

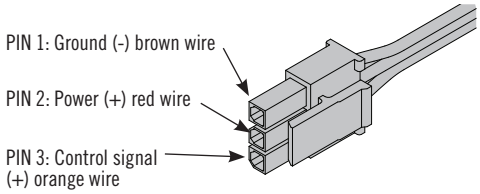

Part Number	Connector Type
AC-EM-050-5010	with Molex brand Microfit 3.0 connector
AC-EM-050-5020	without connector (stripped and tinned)

Optional Mounting Kit

For R4-05-XX-505 Rotary Latches (latch and actuators sold separately)

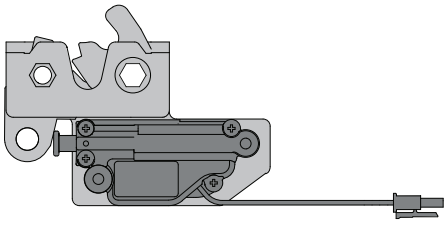

Right hand mounting kit

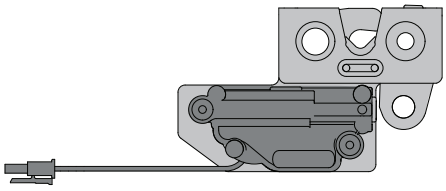

Left hand mounting kit

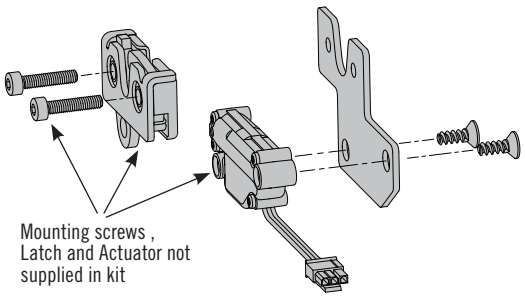

Mounting screws , Latch and Actuator not supplied in kit

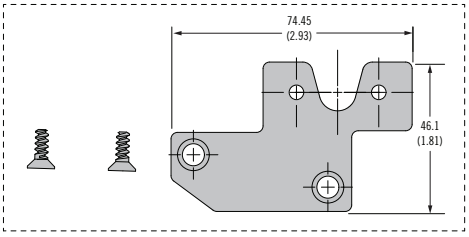

Kit consists of mounting plate and 2 self-tapping screws AC-EM-020-2 shown

Part Number	Type
AC-EM-020-1	Left hand mounting kit
AC-EM-020-2	Right hand mounting kit

Dimensions in millimeters (inch) unless otherwise stated

AC-EM-10 Electro-Mechanical Actuator

Push-style Actuator · Compact Size

- **Two operation modes: Extend & Release and Extend & Hold**
- **Efficient gear motor drive**
- **7.0 mm of travel**
- **IP67 / Class 1 Division 2**
- **Works with Southco R4-10 mechanical rotary Latches**

5V

12V

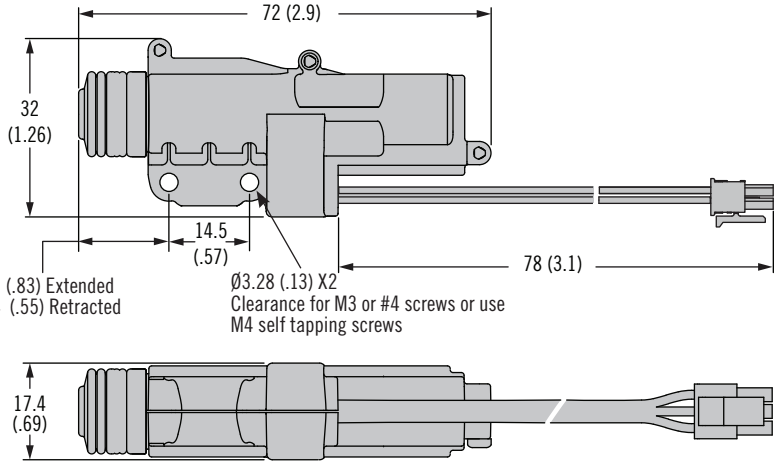

Extend and Hold Mode

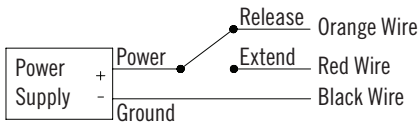

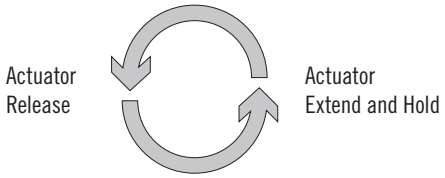

Extend and Release Mode

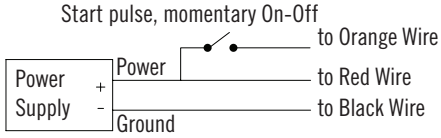

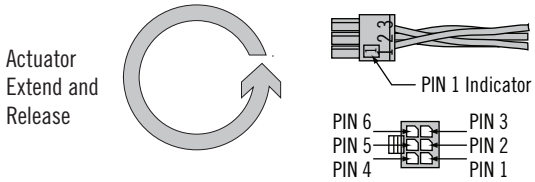

Part Number Selection

F **Function**
0 Extend and release
2 Extend and hold

P **Packaging Option**
None Individual
1 Bulk

AC - EM - 10 F - V 0 C S - P

V **Supply Voltage**
1 12 Volt
5 5 Volt

C **Connector**
2 Without connector
4 Molex Microfit 3.0 series 6 Pin

S **Sealing Level**
2 IP67 / Class 1 Division 2

Optional Mounting Kit

For use with R4-10 Mechanical Rotary Latch
Part number AC-EM-059-1

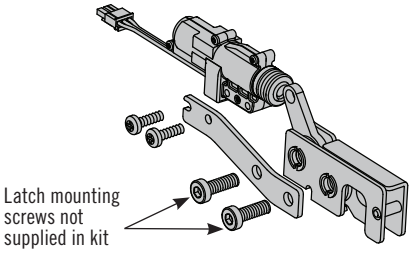

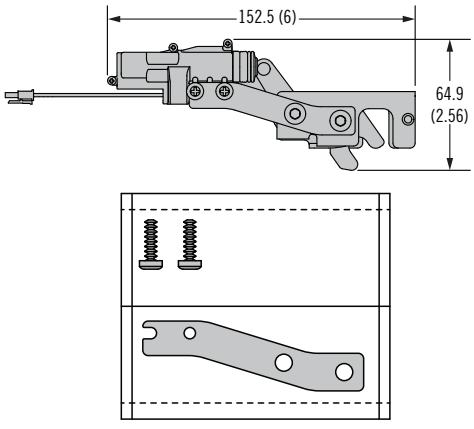

Latch and Actuators sold separately

Material & Finish

Enclosure, Output Cam: Nylon, Acetal
Housing Assembly Screws: Stainless steel

Electronic Specifications

Supply Voltage: 5 or 12VDC

Operating Current:
Less than 300 mA

Operating Temperature:
-20°C - 60°C

Operating Humidity: 85% max
No condensation

Notes

Connector version uses Molex brand Microfit 3.0

Visit southco.com to download further installation and operation details

*Refer to trade drawing for detailed operating instructions.

Dimensions in millimeters (inch) unless otherwise stated

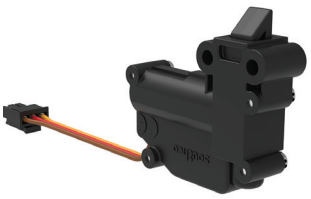

EM-05-5X Electro-Mechanical Slide Bolt

Push-to-close · Compact size

- **Push to close/electrical release**
- **Small, economical, low power slide bolt fits tight spaces**
- **Retract and Release**
- **Retract and Hold**

Material & Finish

Enclosure: Nylon, black
Latch Bolt: Acetal, black
Housing Assembly Screws: Steel, zinc plated

Electrical Specifications

Supply Voltage: 5VDC ±10%

Operating Current: < 300mA

Operating Temperature: 0°C to 60°C

Operating Humidty: 85% max
No condensation

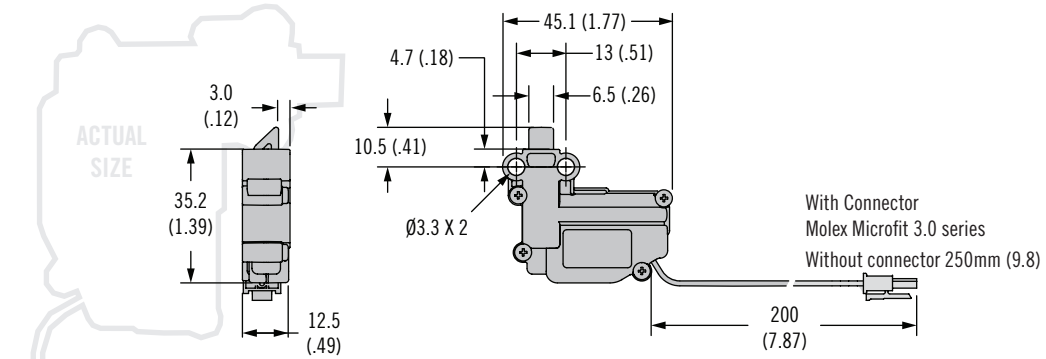

Part Number with Molex Connector	Slide Orientation	Image
EM-05-55-2001	RH	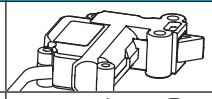
EM-05-54-2001	LH	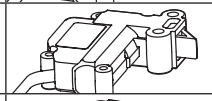
EM-05-53-2001	Up	
EM-05-52-2001	Down	

Installation

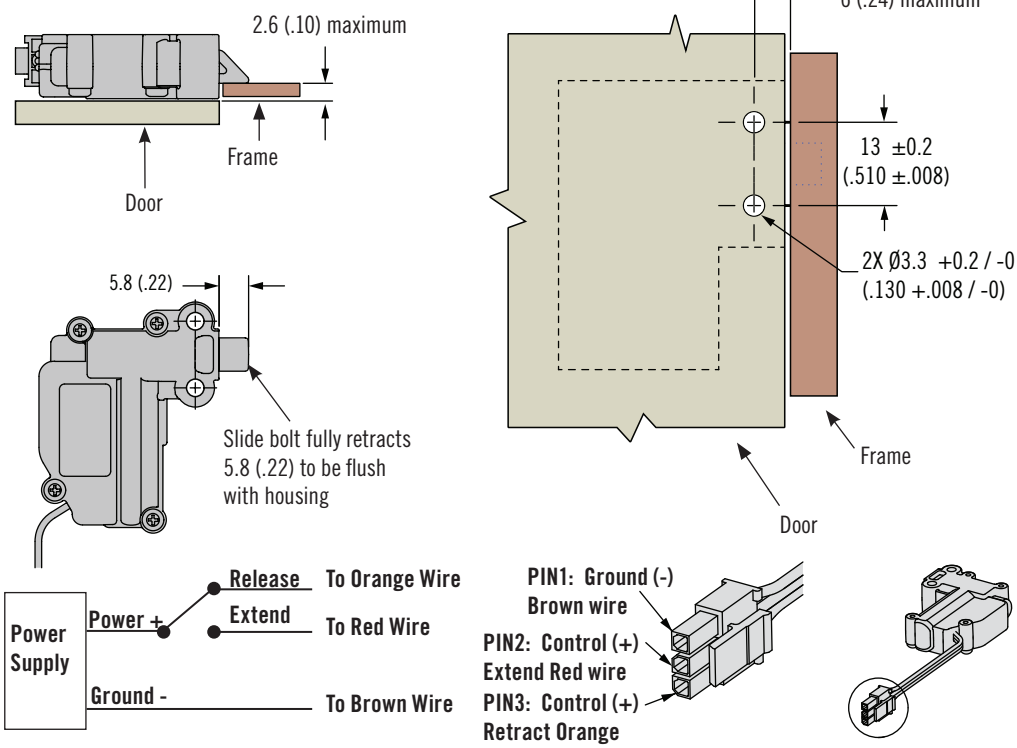

Dimensions in millimeters (inch) unless otherwise stated

EM-05-4X Electro-Mechanical Slide Bolt

Push-to-close · Integrated Sensing

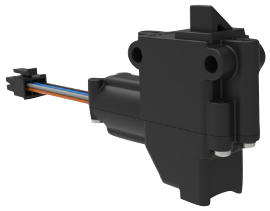

Perpendicular Mounting Holes

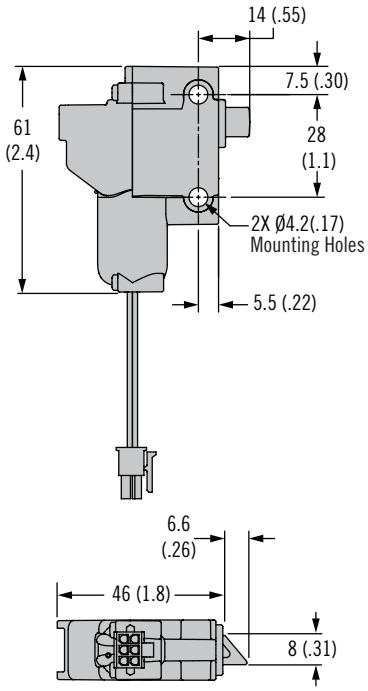

In-Line Mounting Holes

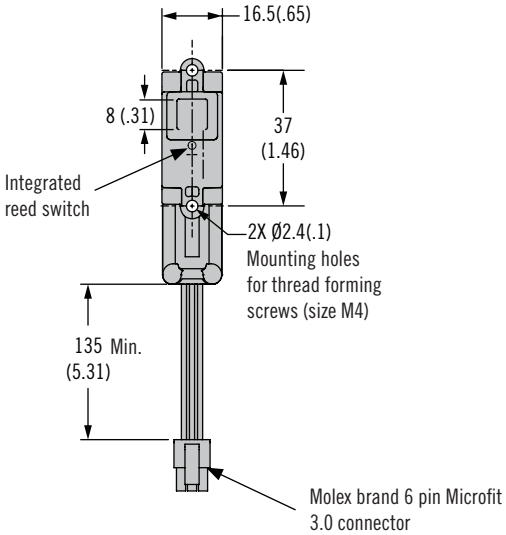

Part Number
EM-05-42-2401

Two Position (Lock-Unlock) Mode

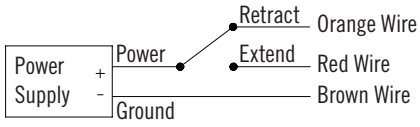

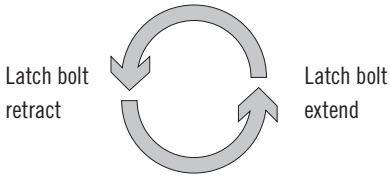

Start Pulse (Auto-Relock) Mode

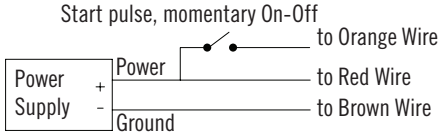

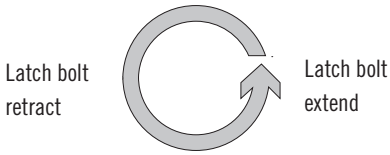

Mounting Options

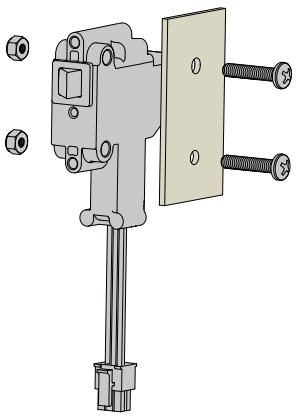

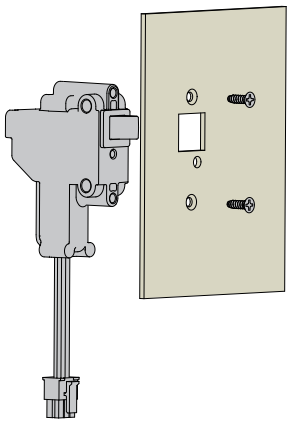

- **Push to close/electrical release**
- **Integrated Sensors to monitor door and latch status**
- **Retract and Release**
- **Retract and Hold**

Material & Finish

Enclosure: Nylon, black
Latch Bolt: Acetal, black
Housing Assembly Screws: Steel, zinc plated

Electronic Specifications

Supply Voltage: 5VDC +/- 10%

Operating Current: < 300 mA

Operating Temperature:
0°C - 60°C

Operating Humidity: 85% max
No condensation

Notes

Visit Southco.com to download further installation and operation details.

Add -1 to the end of the part number for bulk packaging.

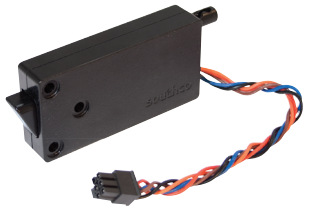

EM-05 Miniature Electronic Slide Bolt

Push-to-close · Compact size · Mechanical override

- Simple transition from mechanical to electronic access
- Microprocessor controlled gear motor
- Minimal power draw
- Optional internal microswitch for latch open/close output signal
- Accepts signals from any electronic actuation source
- Single or multi-point latching

Material & Finish

Enclosure & Latch Bolt:
Thermoplastic
Housing Assembly Screws:
Steel, zinc plated

Electrical Specifications

Recommended Operating Voltage:
12-24 VDC

Typical Operating Current:
Less than 600mA at 12 VDC

Control Input

Retracted Position: 12-24 VDC
The latch bolt will remain retracted for as long as the signal is present or a minimum of 1 second.
Input Signal Current: 25mA Max at 24 VDC

Extended Position: 0 VDC

Side Mount

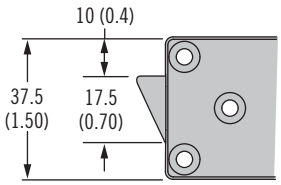

Front Mount

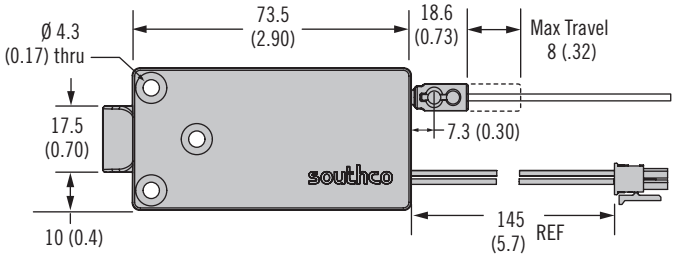

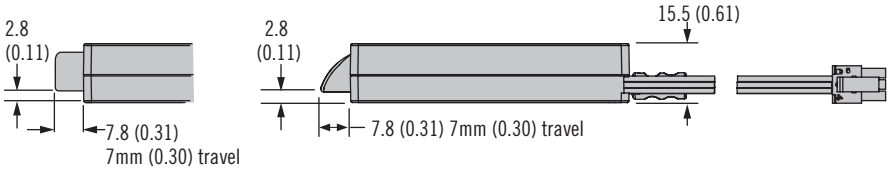

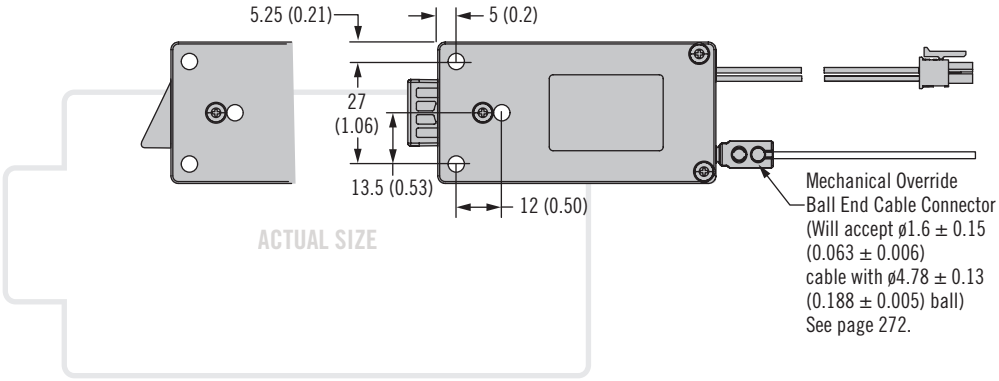

Latch Wiring Connection

Molex Microfit 3.0 series

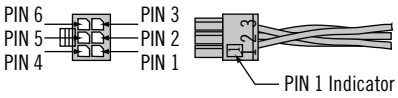

Wire Color Code / Connector Pin Assignment:

PIN 1: Brown: Ground (-)
PIN 2: Red: Power 8 to 26 VDC
PIN 3: Orange: Control Signal 8 to 26 VDC
PIN 4: Black: Microswitch Common
PIN 5: Blue: Microswitch N.O. Contact
PIN 6: None

Miniature Electronic Keeper Part Numbers				
Type	With Mechanical Override		Without Mechanical Override	
	With Switch	Without Switch	With Switch	Without Switch
Front Mount Latch Bolt	EM-05-11-111	EM-05-11-101*	EM-05-11-110	EM-05-11-100
Side Mount Latch Bolt	EM-05-21-111	EM-05-21-101*	EM-05-21-110	EM-05-21-100

* For Mechanical Version of Front Mount Style order part number EM-05-11-001
* For Mechanical Version of Side Mount Style order part number EM-05-21-001
(Mechanical version does not include drive motor or electronics)

Dimensions in millimeters (inch) unless otherwise stated

EM-10 Electronic Slide Bolt

Push-to-close

- **Microprocessor controlled gear motor**
- **Accepts signals from any electronic actuation source**
- **Frame side mounting simplifies wiring**

Material & Finish

Enclosure & latch bolt: Thermoplastic
Housing assembly screws: Steel, zinc plated

Electrical Specifications

Recommended operating voltage: 12 or 24 VDC
No load operating current: 200 mA @ 24 V
Peak stall / current: 1 A

Control Input

Retracted Position: 24 Volt DC
The latch bolt will remain retracted for as long as the signal is present or a minimum of 1 second.
Input Signal Current: 25 mA
Extended Position: 0 VDC

Output Signal

Output Signal Rating: 450 mA Maximum load
Output will turn on when latch bolt is in retracted position. Output slow flashes On/Off when latch error occurs.
No signal at latch bolt extended position.

*The Electronic Keeper is provided with a specific latch bolt orientation (Left, Right or Center). Latch bolt direction can be re-oriented using the appropriate replacement gear from the optional rotation kit.

Front Mount (left version shown)

Wire Color Code / Connector Pin Assignment:

PIN 1: Control input signal
PIN 2: Power (+)
PIN 3: Output signal
PIN 4: Ground (-)

Mate connector not included, order separately.

Connector Detail

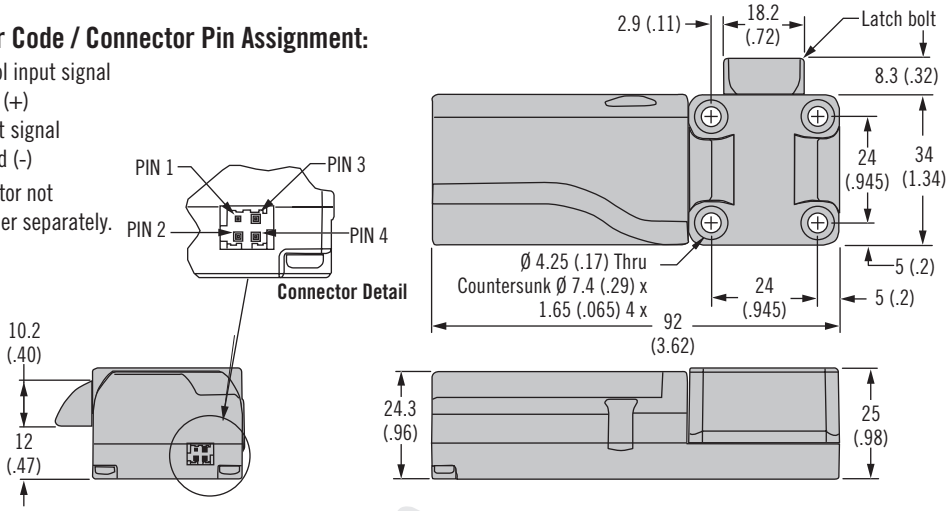

Side Mount (left version shown)

Dimensions same as Front Mount, except as noted.

ACTUAL SIZE

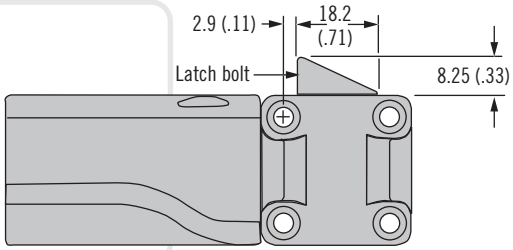

Wire Harness and Connector

Part Number		
Wire Harness with Mate Connector (order separately)	Length	
EM-10-40	300 (11.81)	
EM-10-41	1000 (39.37)	
EM-10-42	2000 (78.74)	

Rotation Kit

Part Number		
Rotation Kit * (order separately)	EM-10-32-85	

VDC	Part Numbers	Side Mount Version
12VDC 24VDC	EM-10-23-310 EM-10-23-410	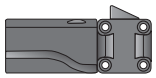
12VDC 24VDC	EM-10-21-310 EM-10-21-410	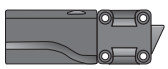
12VDC 24VDC	EM-10-32-310 EM-10-32-410	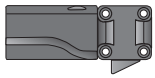

VDC	Part Numbers	Front Mount Version
12VDC 24VDC	EM-10-13-310 EM-10-13-410	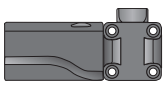
12VDC 24VDC	EM-10-11-310 EM-10-11-410	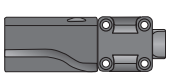
12VDC 24VDC	EM-10-12-310 EM-10-12-410	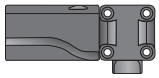

Electronic Access Control

Overview

- Variety of access controllers to fit most application requirements
- Control one or multiple electronic latches
- Integrate access control with existing control systems

Keypads

Southco's digital keypad solutions feature mechanical push-button and membrane switch versions for simple pin-based access control.

RFID Card Readers

Southco's card reader solutions provide access control using standard RFID proximity cards typically used for building access.

Bluetooth Controller

Southco's bluetooth controller solution allows the users phone and tablet to be used as as a virtual key to unlock Southco electromechanical locks. Contact Southco for further information.

System Integration

System Integration solutions support integration between existing control systems and Southco electromechanical locks.

RF Controllers

RF technology enables wireless actuation of Southco locks using radio frequency technology for remote, wireless locking and unlocking.

Dimensions in millimeters (inch) unless otherwise stated

Access Controller	Access Type	Number of User Codes	Output / Connections
EA-KC2	Membrane Keypad	Up to 120 user codes	2 Independent transistor outputs
EA-BT	Bluetooth	Dependent on registration type	1 transistor output
EA-P3	High Frequency RFID Card	Allows management of 64 users	Wiegand output, lockout alarm and tamper switch
EA-A01	2 Wiegand Inputs	Dependent upon access control devices	Wiegand output with door status data
EA-A06	1 USB Input	Dependent on connected computer	14 transistor outputs
EA-R01	RF Transmitter	up to 4 transmitters (2 supplied)	2 polarity reversing relay outputs, 1 auxillary relay output
EA-R02	RF Transmitter	up to 4 transmitters (2 supplied)	2 user configurable lock / unlock relay outputs, 1 auxillary relay output

EA-KC2 Series Keypad Access Controller

Membrane keypad

- **Simplified, secure access management**
- **Attractive, customizable membrane style keypad**
- **Programmable to accommodate multiple access arrangements**
- **Direct integration with electronic locks**
- **Controls up to two compartments independently**
- **Sleep mode for minimal power draw**
- **Up to 120 user codes**
- **LED indicators for keypad status & programming**

Material & Finish

Membrane Keypads with Tactile Keys: Textured Polyester Film with PSA Tape for Mounting on Backside
Controller Housing: ABS
Controller Circuit Board: FR4

Electrical Specifications

Supply Voltage: 12-24 VDC
Stand By Current: 30µA
Operating Current: 10mA (Typical)
Maximum Total Output: 4 Amps (2 Amps per Output)

How to Order

1. Order one controller EA-KC2-201
2. Order standard Southco membrane keypad. Contact Southco for custom membrane keypad design.
3. Order Southco Power Supply EA-A02-002 and select the appropriate plug adapter if needed.
4. Use latch wire harness options table to select cable to accommodate Southco EML

Horizontal Keypad

Part Number EA-KC2-101

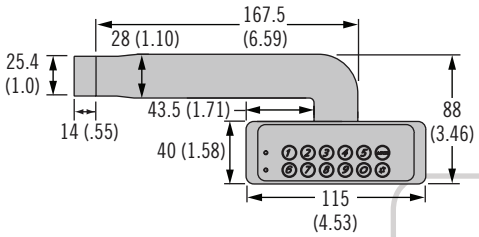

Vertical Keypad

Part Number EA-KC2-102, EA-KC2-103 & EA-KC2-104

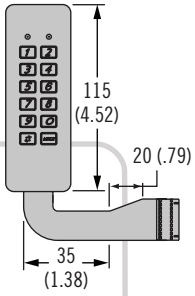

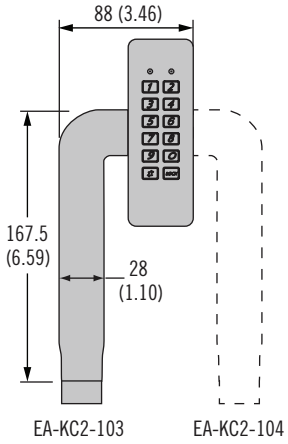

Controller Assembly

Part Number EA-KC2-201

ACTUAL SIZE

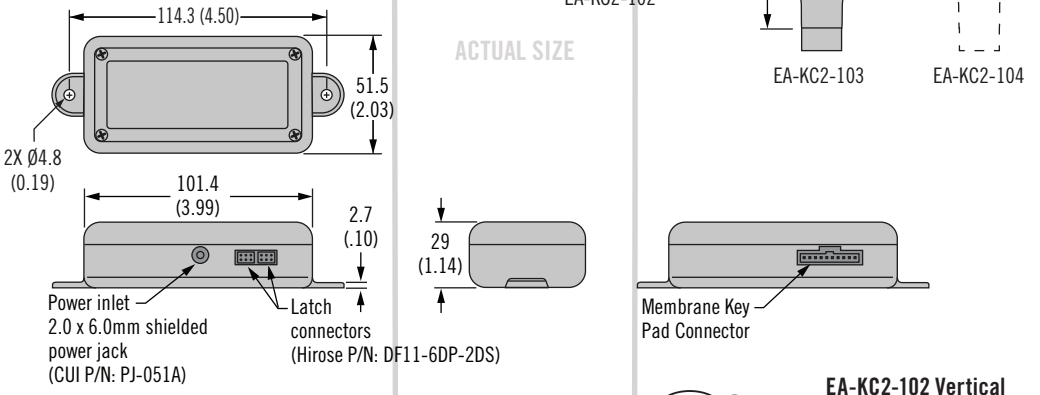

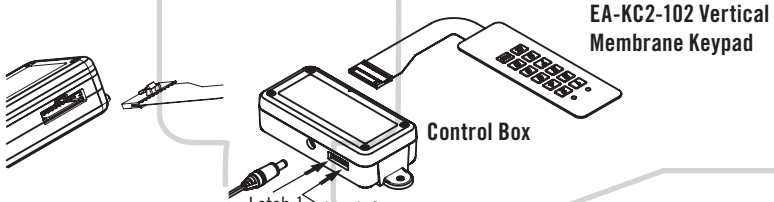

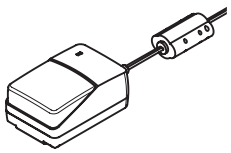

Latch Wire Harness Options

Part Number	Description	
EA-W01-200*	2 Meter Wire Harness Stripped and Tinned	
EA-W20-201-01*	2 Meter Wire Harness to Connect Membrane Controller to Miniature Electronic Keeper (EM-05-XX-XXX)and/or Electronic Rotary Latch (R4-EM-XX-XXX)	
EA-W01-200-01*	2 Meter Wire Harness to Connect Membrane Controller to Electronic Swing Handle(H3-EM-XX-XXX)	

*Contact Southco For Custom Lengths

Power Supply Plug Adapters

Part Number	Description	Function
EA-A02-002**	Power Supply with NA 2-Pin	
EA-A02-002 & EA-A02-002-2	Power Supply with Euro 2-Pin	
EA-A02-002 & EA-A02-002-3	Power Supply with UK 3 Pin	
EA-A02-002 & EA-A02-002-4	Power Supply with SAA 2-Pin	

**EA-A02-002-1 NA 2-PIN included with EA-A02-002 Power Supply.

Dimensions in millimeters (inch) unless otherwise stated

EA-P3 High Frequency RFID Access Controller

Standalone Access Controller

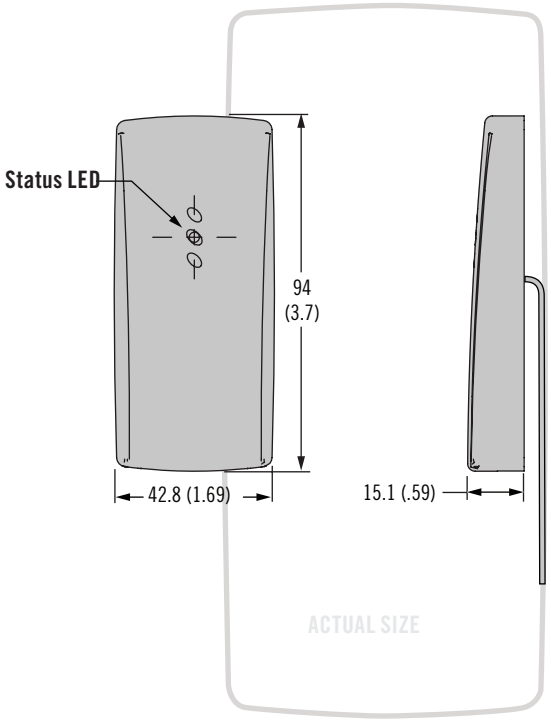

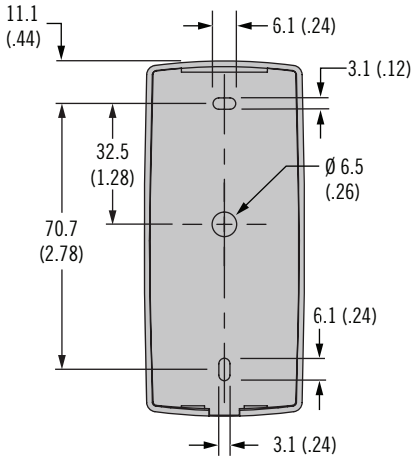

300m Harness (stripped and tinned) installed

- **Non-contact proximity based access control**
- **Reads *MIFARE*® compatible 13.56 MHz RFID credentials**
- **Integrated LED status indicator**
- **Compact, low profile design**
- **Simple, 3 hole installation**
- **Relay Output (Form C)**
- **Enables management of 64 users**
- **Adjustable door release time**

Material & Finish

ABS Plastic

Electrical Specifications

Supply Voltage: 12VDC +/- 10%

Operating Current: 160 mA Maximum (No attached devices)

Operating Temperature: -15 to 55 ^{0}C

Transmit Frequency: 13.56 MHz

Read Range: Up to 5 cm (2 in.)

Notes

** *MIFARE*, *MIFARE* Classic, *MIFARE* Plus and *MIFARE* DESFire are trademarks of NXP B.V.

Panel Preparation

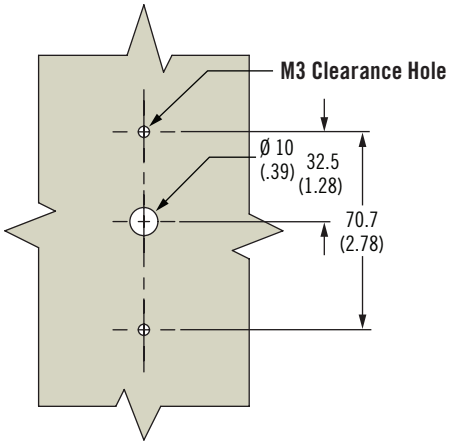

Wire Harness Legend	
Wire Color	**Function**
Red	VCC (12VDC)
Black	GND
Brown	Relay N.O
Orange	Relay COM
Yellow	Relay N.C.
Green	Unused
Blue	Auxiliary Input
Light Green	LED GND
Pink	LED Control (+12VDC)
Purple	Tamper Switch N.C.
Gray	Tamper Switch N.O.
White	Tamper Switch COM

Part Number Selection*	
EA-P3-200-1	High Frequency RFID Controller w/ Logo
EA-C3-101	*MIFARE*® RFID Credential; Slotted, w/o Logo

* Contact Southco for Custom Color and Logo Options

EA-A06 USB Controller

Electronic access

- **Allows computer controlled electro-mechanical latch operation via USB port**
- **14 Independent latch inputs / outputs**
- **Simple programming commands / easy program interface**
- **Integrate with many Southco electro-mechanical latch solutions**
- **Labeled connections for easy set up**

Material & Finish

Controller Housing: ABS
(UL94-5VA Flammability Rating)

Electrical Specifications

Operating Voltage: 12-24 VDC
Do Not Exceed Max Latch Voltage
Max Output Per Latch: 2 Amps

How to Order

1. Order one Controller with USB Cable: EA-A06-001
2. Order Southco Power Supply EA-A02-002 and select the appropriate plug adapter if needed

3. Use latch wire harness options table to select cable to accommodate Southco electromechanical latches

Controller Assembly

Part Number
EA-A06-001

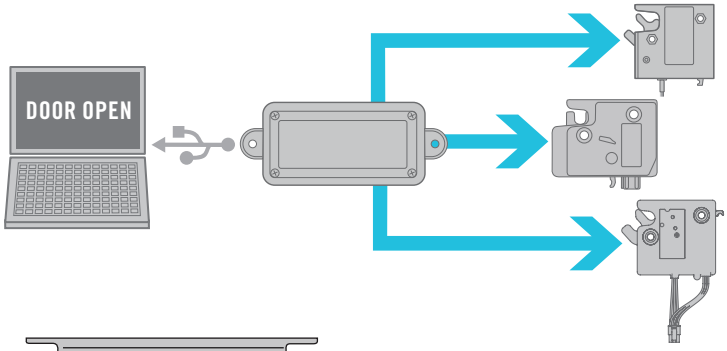

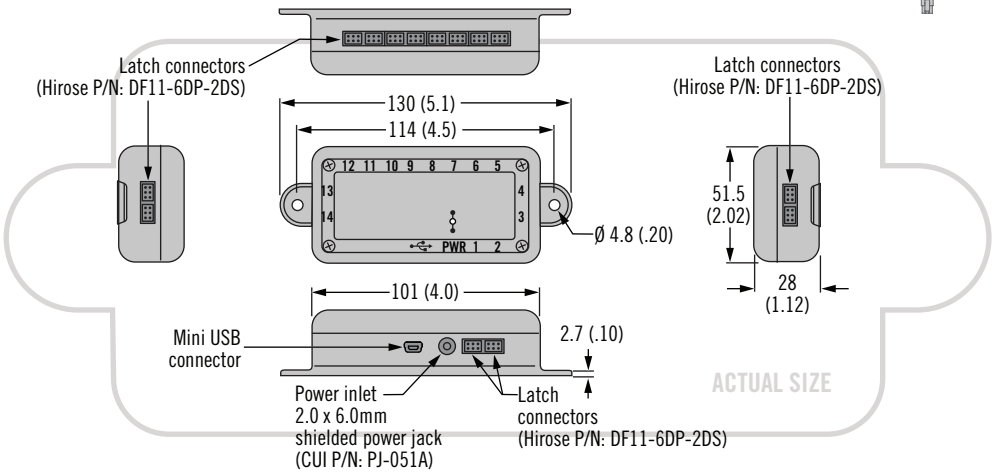

1 Meter USB Cable (Included)

EA-A02-002 Power Supply (Order separately)

Wire Harness Options		
Part Number	**Length**	**Connects to**
EA-W01-200*	2 Meters	Stripped and Tinned
EA-W20-201-01*	2 Meters	
EA-W20-201-01*	2 Meters	
EA-W01-200-01*	2 Meters	
EA-W02-203-01*	2 Meters	

*Contact Southco For Custom Lengths

Power Plug Adapters

Part Number	Description	Function
EA-A02-002**	Power Supply with NA 2-Pin	
EA-A02-002 & EA-A02-002-2	Power Supply with Euro 2-Pin	
EA-A02-002 & EA-A02-002-3	Power Supply with UK 3 Pin	
EA-A02-002 & EA-A02-002-4	Power supply with SAA 2-Pin	

**EA-A02-002-1 NA 2-PIN included with EA-A02-002 Power Supply.

Dimensions in millimeters (inch) unless otherwise stated

Security System Integration Kit layout (Part Number EA-A01-102)

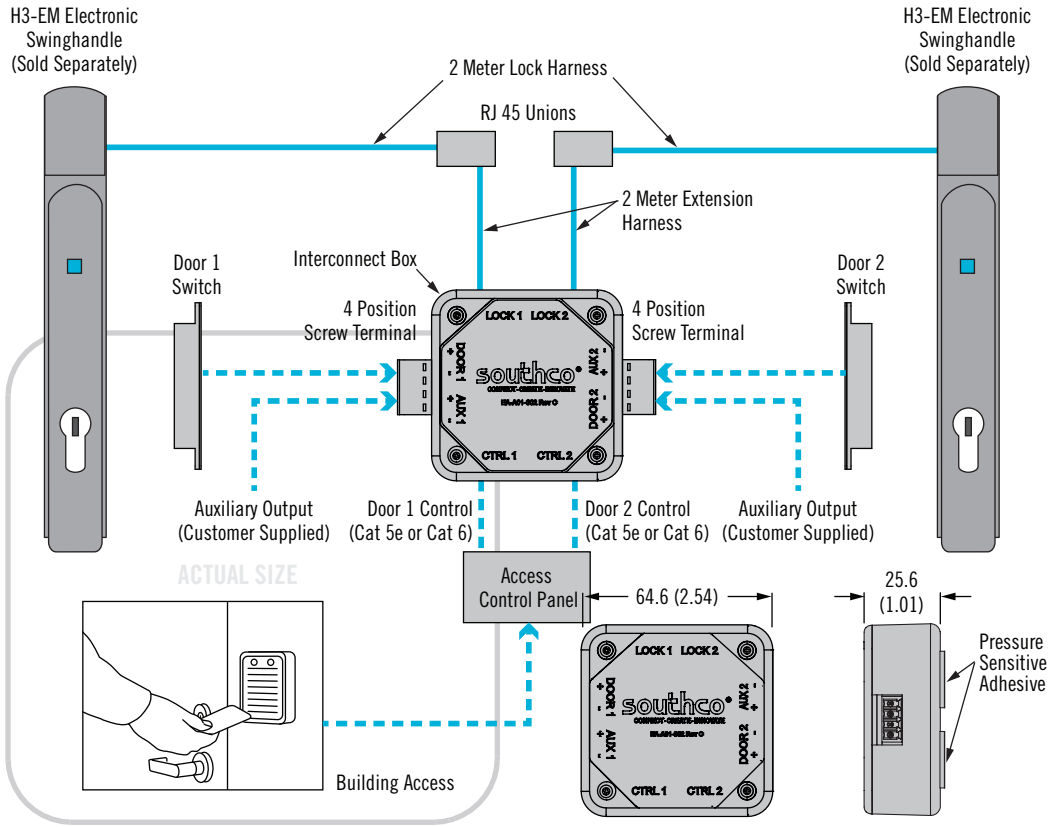

Security System Integration Kit Part Numbers		
EA-A01-102: Use with H3-EM-60, -62, -66 & -68 Series Latches **EA-A01-202: Use with H3-EM-64 & -65 Series Latches** **Kits Include the Following:**		
Quantity	**Description**	
1	Interconnect Box	
2	RJ45 Union (For door removal)	
2	2 Meter Extension Harness (CAT 5e cable)	
2	2 Meter Lock Harness (Custom Southco Cable)	
2	4 Position Screw Terminal (For door switch and auxilliary output connection)	
2	Magnetic Door Switch (For sensing door status. Mount using supplied adhesive or screws.) Note: cable not included	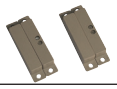
1	User Instructions (J-EA-A01-102-M and J-EA-A01-202-M)	

- **Simplifies wiring between data center racks and remote access control panels**
- **Connects Southco H3-EM Electronic Swinghandle to existing access control system**
- **Facilitates both remote control and monitoring of H3-EM Electronic Swinghandle**
- **Cabinet level cables, door switches, and connectors included in kit**
- **System integration using standard structured cabling**

Material and Finish
Housing: ABS, UL94-5VA
PCB: FR4

Specifications
RoHS Compliant
Auxiliary and Door Switch Contacts not to exceed 0.4 A
Connects to any Wiegand based Access Control Panel

Mounting
Interconnect Box supplied with pressure sensitive adhesive
*Note: In system layout, solid lines shown represent Southco supplied wiring; dotted lines shown represent customer supplied wiring
See Southco Trade Drawing J-EA-A01-102 for additional wiring and pin out details

EA-R01 RF Controller

Key fob actuator / receiver for outdoor applications

- **Durable, water-proof construction**
- **Dual sequenced outputs minimize battery drain**
- **Fused 30 Amp outputs accommodate multiple latches**
- **Auxiliary light/horn output for visual/audible lock confirmation**
- **Simple transmitter programming**
- **Integrate with any Southco Electromechanical latch solution**

Specifications

Receiver Power: 12VDC (± 25%)
Receiver Idle Current: ≤10mA
Receiver Operating Current: ≤30A momentary
Receiver Outputs: Output 1 & 2: 30A polarity reversing relays
Aux Output: 30A single pole relay
Operating Range: up to 30 m (100 ft)

Operating Frequency: 340MHz
Not for use outside North America
Coding Type: Fixed Code
Enclosure Rating: IP67
Transmitter Power: Type 23 12VDC battery
Receiver output fuses 15A Littelfuse 297 Series *MINI*® Fast-Acting automotive blade fuse or equivalent.*

Connection Details

All electrical connections are made via screw terminals accessible by removing 2 screws and name plate

* *MINI* is a registered trademark of Littelfuse, Inc.

Transmitter

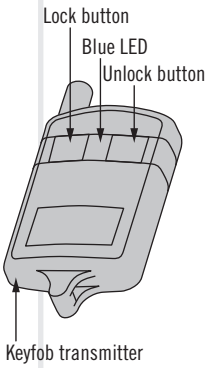

Receiver

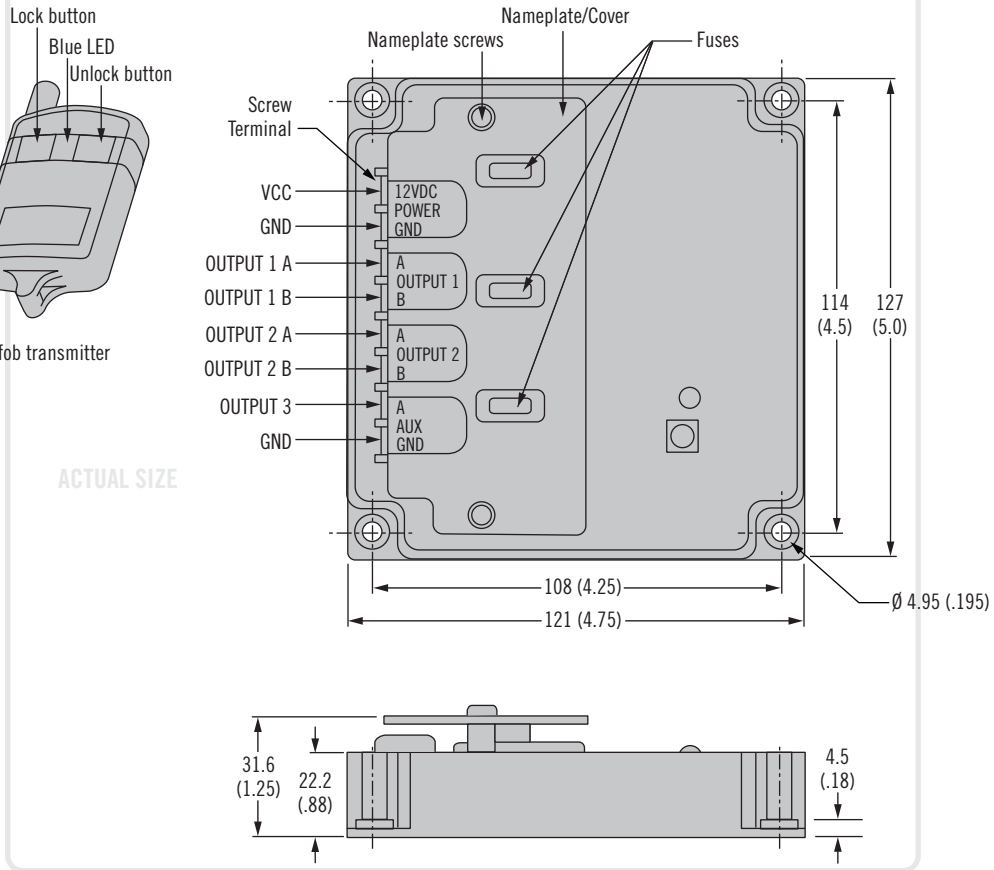

RF Controller Kit Part Number: EA-R01
Includes 1 receiver (EA-R01-201) and 2 transmitters (EA-R01-101)

Operation

Shipped with two pre-programmed transmitters

Press transmitter "UNLOCK" button Controller will produce a 12VDC pulse for 200ms on output 1 terminal A, followed by a 300ms pause followed by a 200ms 12VDC pulse on output 2, terminal A

After another 300ms pause, the controller will produce two 400ms pulses separated by a 200ms pause on the auxiliary light/horn output

Press transmitter "LOCK" button Controller will produce a 12VDC pulse for 200ms on output 1 terminal B, followed by a 300ms pause followed by a 200 ms 12VDC pulse on output 2, terminal B

After another 300ms pause, the controller will produce one 400ms pulse on the auxiliary light/horn output

Simple push-button learn feature with LED feedback for enrolling transmitters. Note: EA-R01 shipped with 2 pre-programmed transmitters

Dimensions in millimeters (inch) unless otherwise stated

EA-R02 RF Remote Control System

Electronic access for indoor applications

Receiver

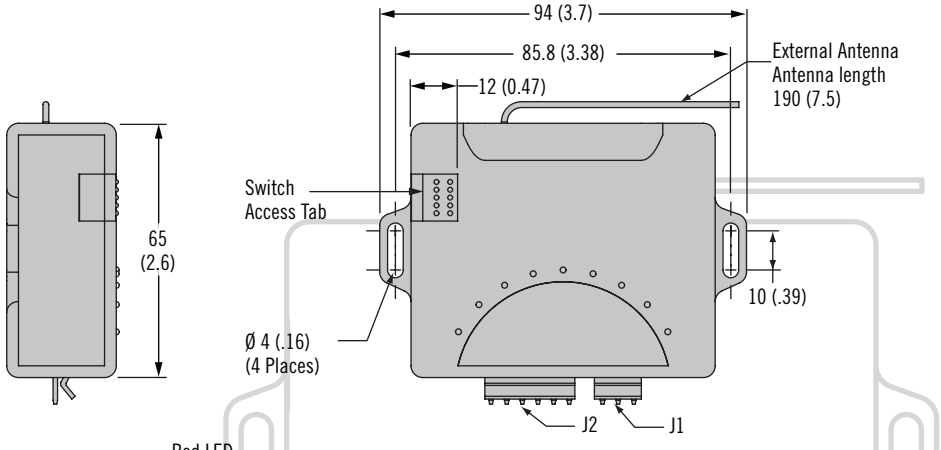

Transmitter

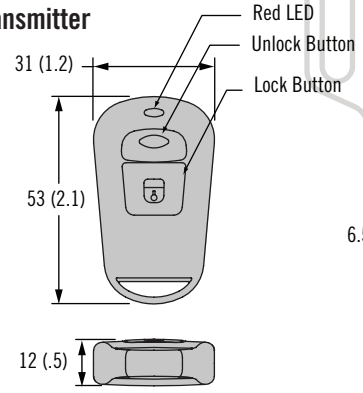

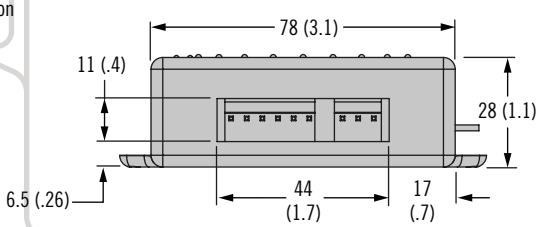

Power Supply and Auxiliary Output Wire Harness (J1)

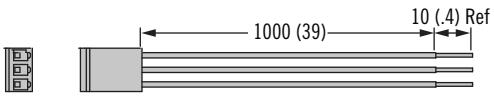

Pin	Wire Color	Description
1	Red	VCC (+12VDC Power Supply Input)
2	Black	GND (Ground)
3	Yellow	Auxiliary Output (Vout = VCC)

LOCK & UNLOCK Relay Wire Harness (J2)

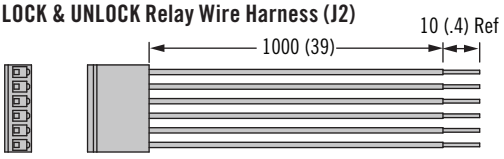

Pin	Wire Color	Description
1	Blue/Black	LOCK Relay – Normally Closed (typically connect to GND)
2	Blue	LOCK Relay – Common (typically connect to latch)
3	Blue/Red	LOCK Relay – Normally Open (typically connect to VCC)
4	Green/Black	UNLOCK Relay – Normally Closed (typically connect to GND)
5	Green	UNLOCK Relay – Common (typically connect to latch)
6	Green/Red	UNLOCK Relay – Normally Open (typically connect to VCC)

RF Remote Control System Part Number: EA-R02
Includes 1 Receiver, 2 Transmitters (EA-R02-102), 1 Pair Power/Auxiliary and Lock/Unlock Relay Connector Wire Harnesses and Operating Instructions

Note: Individual components can be ordered separately. Contact Southco for information.

- **Secure, convenient, wireless remote lock actuation**
- **Quick installation and setup**
- **Proven 433 MHz radio frequency technology**
- **Up to 4 transmitters per receiver**
- **18 meter (60 feet) unobstructed open air operating range**
- **Auxiliary output for horn/ light indicator output**

Material & Finish

ABS Plastic

Electrical Specifications

Receiver

Power: 12VDC (±10%)

Standby Current: 10mA Maximum, No Attached Devices

Operating Current: 100mA Maximum, No Attached Devices

Outputs: Three Form C Relays, Rated 15A at 14VDC

Lock/Unlock Output Pulse Duration: 250ms or 10 sec (Selectable)

Operating Temperature: -20 to 80 °C

Operation

Operating Frequency: 433.92MHz

Not for use in Japan

Coding Type: Fixed Code (24-Bit)

Switch Access Tab

Switch 1 - Used to enroll transmitters

Switch 2 - Used to set LOCK and UNLOCK pulse duration

CE

MONITOR MOUNTS AND ARMS

SOUTHCO® MONITOR MOUNTS AND ARMS

Southco Monitor Mounts allow intuitive and ergonomic positioning of monitors. They are available in a range of options, from simple tilt devices to mount arms that allow the monitor to be easily manipulated in multiple axes. Southco Monitor Mounts offer a unique feature by remaining in the position where the user has left them, with no locking clamps or levers required.

Benefits:

- Intuitive, ergonomic positioning of the monitor or touchscreen
- No maintenance or servicing required
- No clamps or levers to lock/unlock
- Suitable for static and dynamic applications
- Simply grab and move, release and position is held

SOUTHCO® Adjustable Monitor Mounts provide a simple, economical solution.

➲ The adjustable monitor mount offers a simplified solution for static applications where monitors only need to be moved into a single stationary position, or where frequent repositioning is not required. Operating efforts can be manually adjusted using the provided tools to tighten or loosen the joints.

Adjustable Monitor Mounts

Pages 60 - 61

AV-B30-10

AV-B30-41

AV-B30-23

AV-B30-40

SOUTHCO® Dynamic Monitor Mounts provide unparalleled reliability.

➲ Every motion tested *SOUTHCO*® dynamic monitor mount will hold its specified operating effort for the life of most applications without maintenance or adjustment

Dynamic Monitor Mounts

Pages 62 - 85

AV-C20

AV-D25

AV-D32

AV-D30

AV-D32

AV-D40

Monitor Mounts and Arms

Selection Guide

MONITOR MOTION

Tilt
Tilts to adjust to user height and lighting preferences

Swivel
Adds swivel motion for left to right positioning

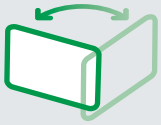

Swing
Adds swing feature that allows the monitor to be folded away for storage

Lift
Adds lifting motion for up and down positioning

TORQUE TYPE

Constant Torque Tilt
Provides consistent operating efforts and the most secure hold for applications with vibration or shock loading

Counterbalanced Tilt
Integrated counterbalance ensures easy operation, by minimizing user efforts, even when repositioning heavy monitors

	AV PRODUCT FAMILY	MONITOR MOTION			
		Tilt	Swivel	Swing	Lift
MONITOR MOUNTS	TILT (T SERIES)	✔			
MONITOR MOUNTS	TILT & SWIVEL (K SERIES)	✔	✔		
MONITOR ARMS	ADJUSTABLE (B SERIES)	✔	✔	✔	
MONITOR ARMS	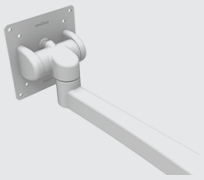 TILT, SWIVEL & SWING (A SERIES)	✔	✔	✔	
MONITOR ARMS	DUAL EXTENSION (D SERIES)	✔	✔	✔	
MONITOR ARMS	VERTICALLY ARTICULATING (C, V & W SERIES)	✔	✔	✔	✔

Use this selection guide to choose the right monitor mount for your application

MONITOR MOTION		MOUNT OPTIONS					
Adjustable	Dynamic Positioning	Table/Desk	Front wall mount	Rear wall mount	Rail wall mount	Pole mount	Docking Mechanism
	✔	✔	✔	✔			
	✔	✔	✔	✔	✔	✔	
✔		✔	✔			✔	
	✔	✔	✔	✔	✔	✔	✔
	✔	✔	✔	✔	✔	✔	
✔	✔	✔	✔	✔	✔	✔	✔

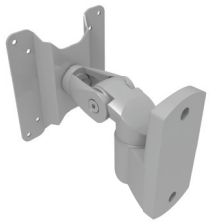

AV Series Adjustable Monitor Mounting Arm

Tilt and swivel · Single arm · Double arm

- **Adjustable joints for flexible operation**
- **Some assembly required for initial installation**
  Installation hardware and adjustment tools supplied
- **Rotate monitor for portrait or landscape orientation**
- **Clamps to desk or table**

Compatible with VESA mounting standards

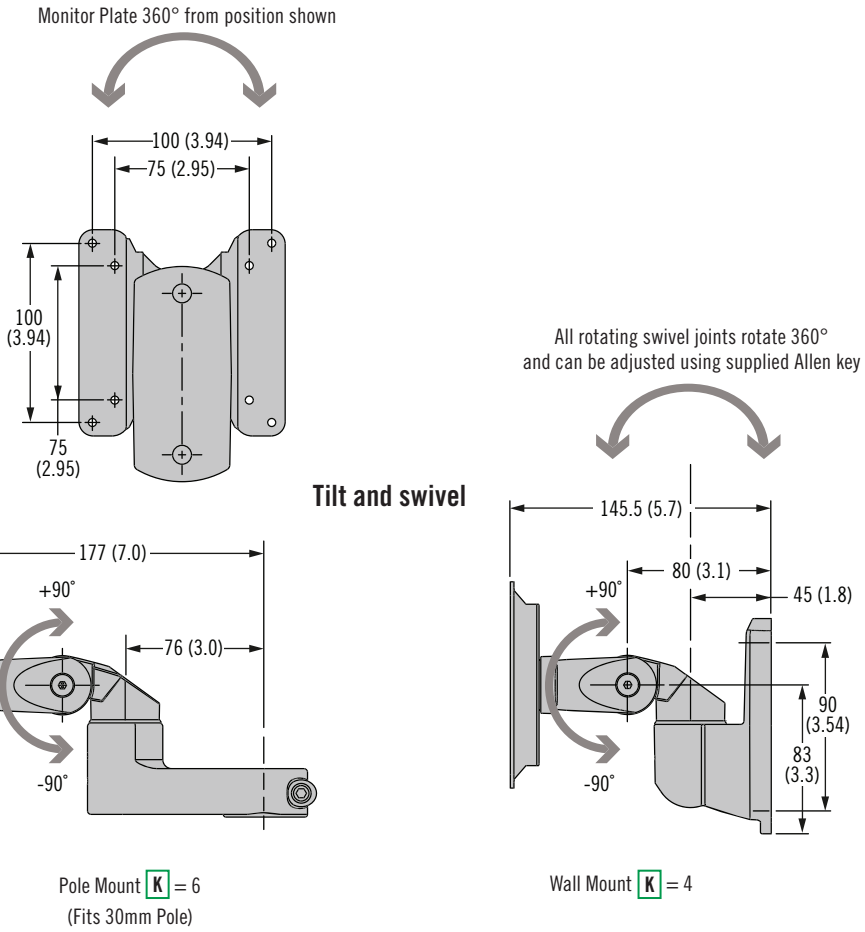

Tilt and swivel

Pole Mount K = 6
(Fits 30mm Pole)

Wall Mount K = 4

Pole Mount Accessories
(Fits all AV-B30 K = 6 variants)
Note: this pole accessory is not compatible with AV-D series mounts

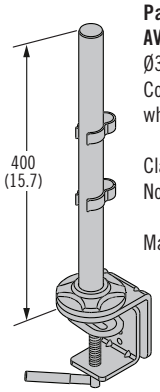

Part Number:
AV-B30-40XC6- F
Ø30mm Pole - clamp mount
Colour: silver (F=70), black (F=50), white (F=76)

Clamp around edge of table.
No holes or damage to table.

Max table thickness 86 (3.38)

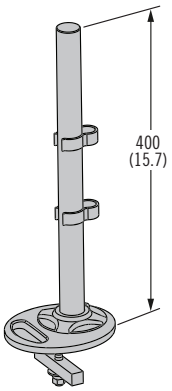

Part Number:
AV-B30-40XG6- F
Ø30mm Pole - grommet mount
Colour: silver (F=70), black (F=50), white (F=76)

Clamp through 12mm (1/2") hole in table.

Max table thickness 34 (1.33)

Dimensions in millimeters (inch) unless otherwise stated

AV Series Adjustable Monitor Mounting Arm

Tilt and swivel · Single arm · Double arm

Single arm

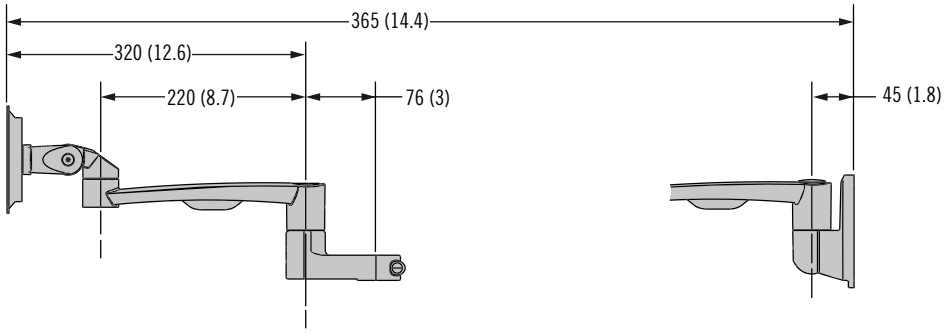

Pole Mount [K] = 6
(Fits 30mm Pole)

Wall Mount [K] = 4

Double arm

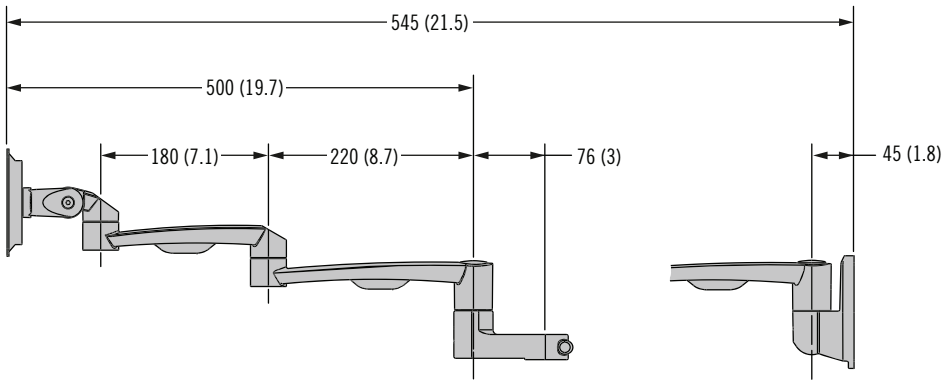

Pole Mount [K] = 6
(Fits 30mm Pole)

Wall Mount [K] = 4

Complete part number by selecting model and color options below.

L	Length & Function
10K	Tilt / swivel
23A	220mm Single arm
41D	400mm Double arm

K	Mounting Style
4	Wall (front) mount
6	Pole mount (Ø30mm Pole)

AV - B30 - L 2 K 3 - F

F	Color
50	Black
70	Silver
76	White

- **Wall or pole mount options**
- **Built-in cable management**

Material and Finish

Aluminum alloy, powder coated

Max monitor weight

Tilt/swivel: 14 kg (31 lbf)
Single arm: 14 kg (31 lbf)
Double arm: 10 kg (22 lbf)

Average ultimate load

Tilt/swivel: 920N (206lbf)
Single arm: 920N (206lbf)
Double arm: 450N (101lbf)
Pole (Clamp mount): 1100N (247lbf)
Pole (Grommet mount): 1400N (314lbf)

Part Number

See table

Part Number Example

AV-B30-41D263-70 = 400mm
Double Arm for Ø30mm Pole mount

AV Series Dynamic Mount

Tilt

- **Intuitive grab and move operation enhances the user experience**
  - No knobs or tools required to reposition the monitor
  - Robust positioning in compact package
  - Holds securely, even in applications with dynamic loading
- **Consistent repeatable operation**
- **Fully enclosed for optimum cleanability**

Product Detail

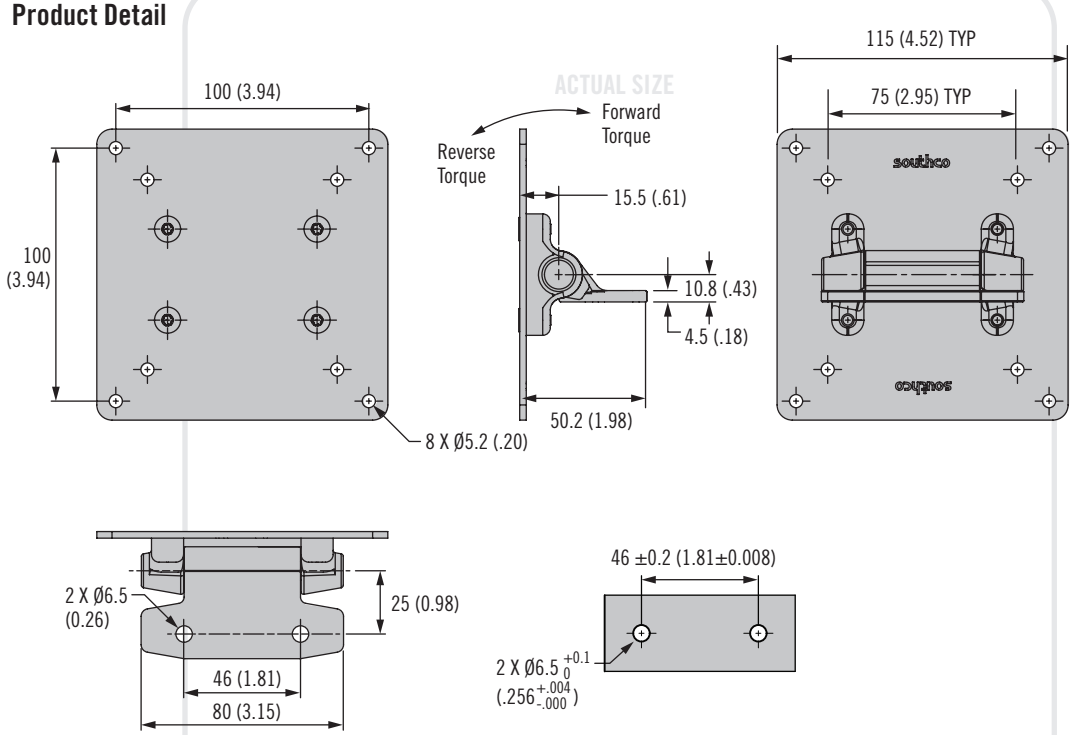

Installation

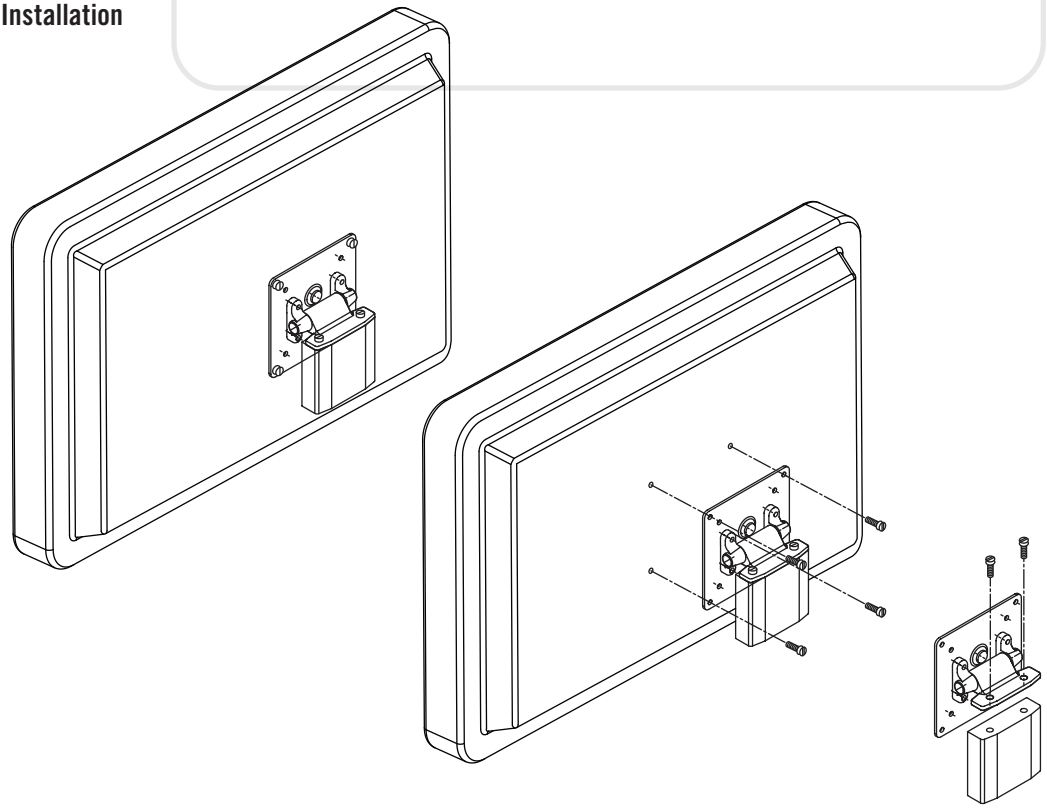

Installation

1. Determine desired mounting location
2. Attach using M6 screws as shown

Caution: Because of the wide variety of available materials, it is the installer's responsibility to ensure that the materials and structure to which the tilt mount is fastened will provide adequate support.

3. Attach monitor using manufacturer's recommended hardware

Compatible with VESA mounting standards

Dimensions in millimeters (inch) unless otherwise stated

Specification and Selection

Step 1
Determine monitor weight and distance (d) from mounting surface to center of gravity.

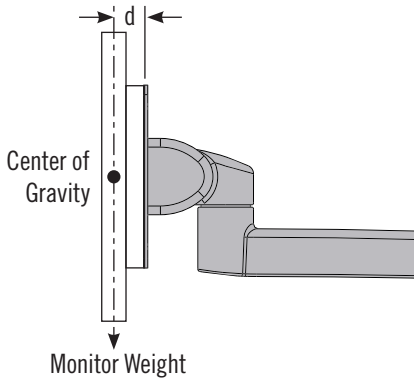

Step 2
Use chart below to select part number.

AV-D25 T-Series Model Selection Guide

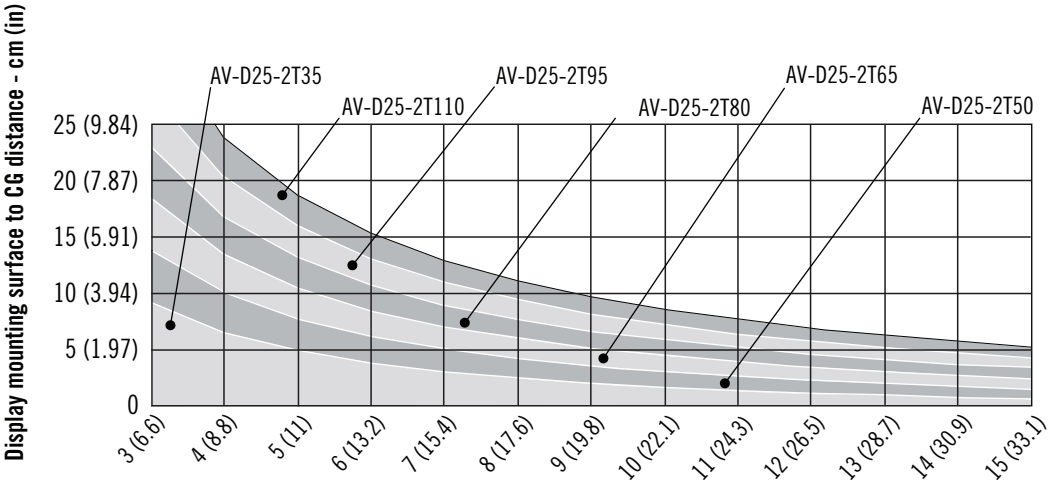

Step 3
Complete part number by selecting color options below.

Part Numbers		Forward Torque N•m (in-lb)	Reverse Torque N•m (in-lb)
Black	White		
AV-D25-2T35F-50	AV-D25-2T35F-76	3.9 (35.0)	3.0 (26.7)
AV-D25-2T50F-50	AV-D25-2T50F-76	5.7 (50.0)	4.0 (35.7)
AV-D25-2T65F-50	AV-D25-2T65F-76	7.3 (65.0)	5.4 (47.5)
AV-D25-2T80F-50	AV-D25-2T80F-76	9.0 (80.0)	6.7 (59.4)
AV-D25-2T95F-50	AV-D25-2T95F-76	10.7 (95.0)	7.8 (68.9)
AV-D25-2T110F-50	AV-D25-2T110F-76	12.4 (110.0)	9.0 (79.8)
AV-D25-2T35R-50	AV-D25-2T35R-76	3.0 (26.7)	3.9 (35.0)
AV-D25-2T50R-50	AV-D25-2T50R-76	4.0 (35.7)	5.7 (50.0)
AV-D25-2T65R-50	AV-D25-2T65R-76	5.4 (47.5)	7.3 (65.0)
AV-D25-2T80R-50	AV-D25-2T80R-76	6.7 (59.4)	9.0 (80.0)
AV-D25-2T95R-50	AV-D25-2T95R-76	7.8 (68.9)	10.7 (95.0)
AV-D25-2T110R-50	AV-D25-2T110R-76	9.0 (79.8)	12.4 (110.0)

- **Smooth operation enhances the user experience**
- **Adjust the monitor without knobs or tools**
- **Holds securely**

Material and Finish
Steel, Aluminum alloy, powder coated

Performance Details
Cycle performance: 20,000 cycles within ± 20% of static torque specification

Max. dynamic working load: 100 N (22.5 lb)
Average ultimate load: 1065 N (240 lb)

Part Number
See table

AV Series Dynamic Mount

Tilt

- **Intuitive grab and move operation enhances the user experience**
  No knobs or tools required to reposition the monitor
  Precise control of operating effort ensures ideal “feel”
  Holds securely, even in applications with dynamic loading
- **Consistent repeatable operation**
- **Fully enclosed for optimum cleanability**

Installation

1. Determine desired mounting location
2. Attach using M5 X 0.8 screws as shown

Caution: Because of the wide variety of available wall materials, it is the installer’s responsibility to ensure that the materials and structure to which the tilt mount is fastened will provide adequate support.

3. Attach monitor using manufacturer’s recommended hardware

Compatible with VESA mounting standards

Product Detail

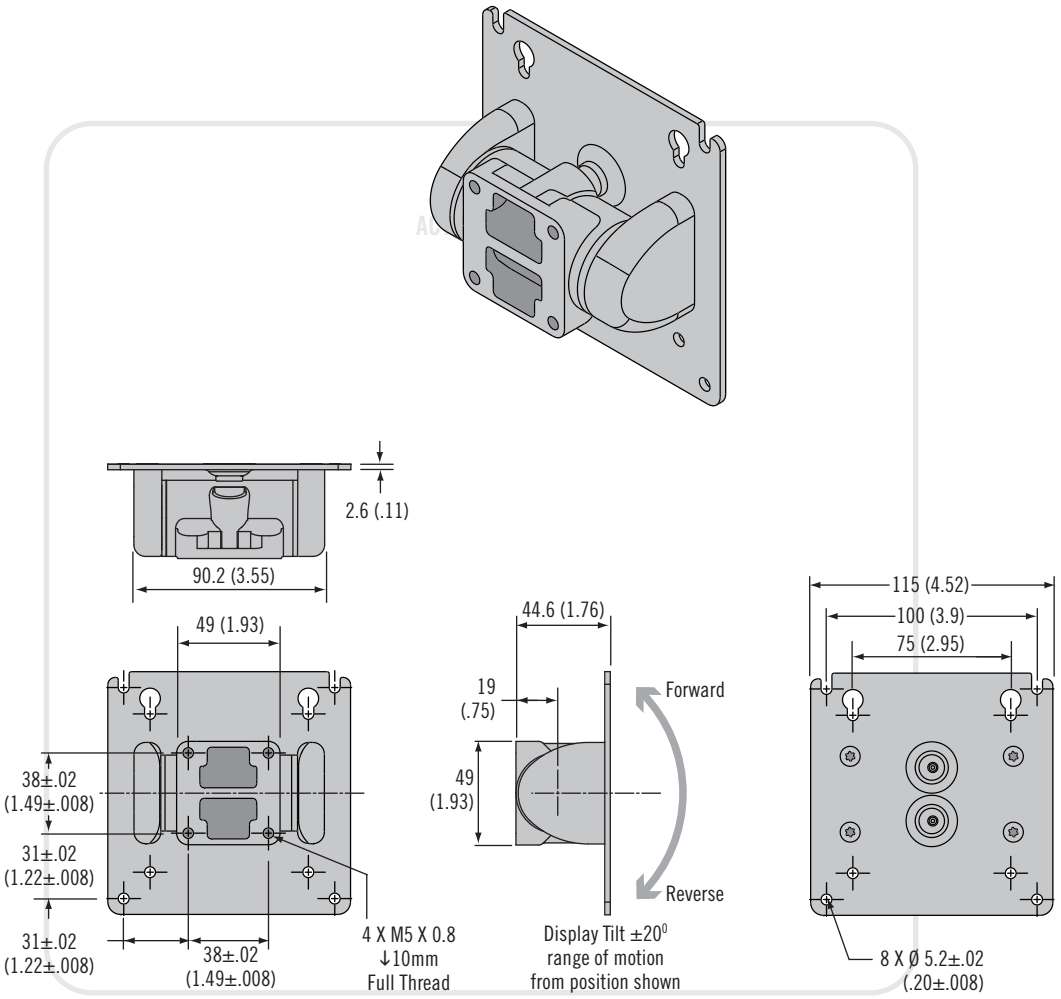

Installation

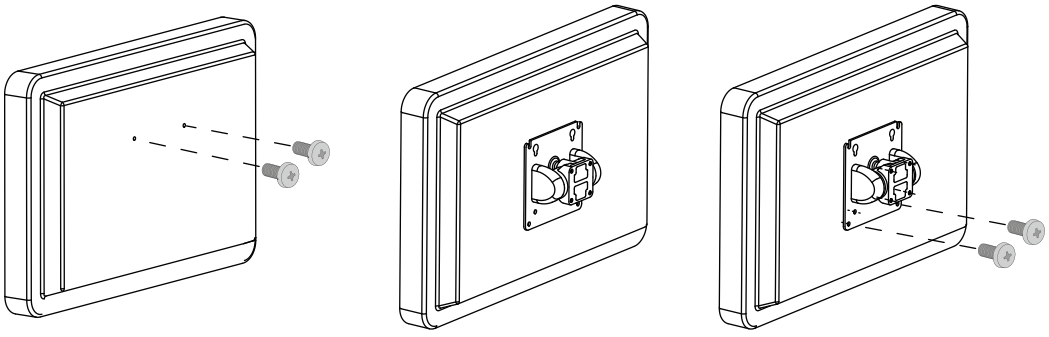

Monitor mounting hardware not supplied

Dimensions in millimeters (inch) unless otherwise stated

Specification and Selection

Step 1

Determine monitor weight and distance (d) from mounting surface to center of gravity.

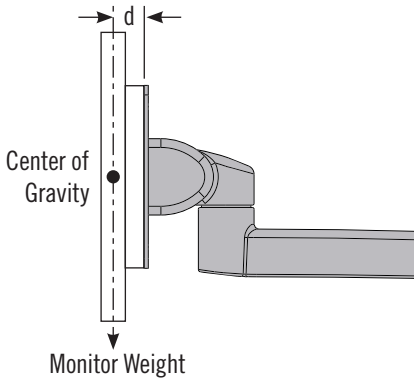

Step 2

Use chart below to select model (1, 2 or 3).

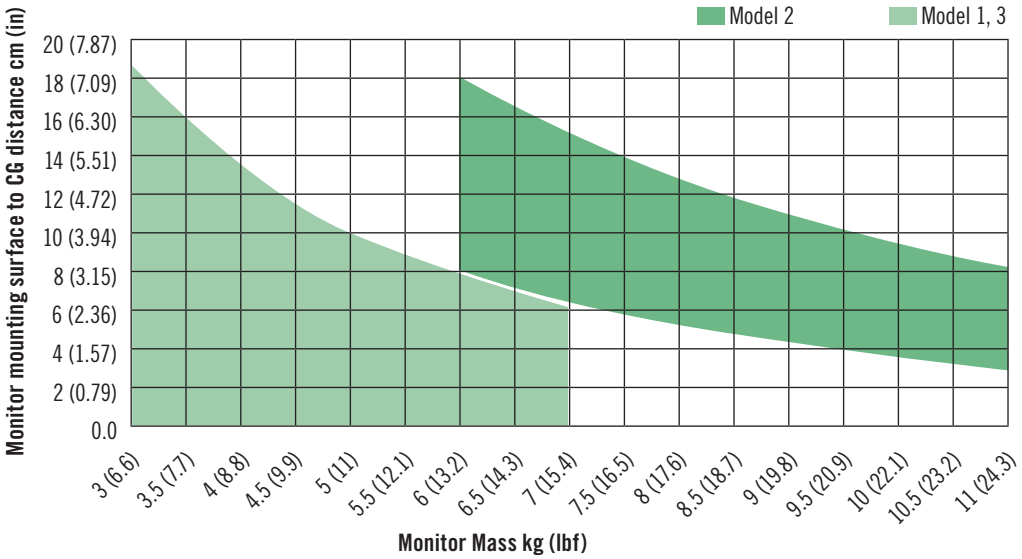

Step 3

Complete part number by selecting model and color options below.

Model S	Monitor size	Tilt Torque N·m (in·lbf)	
		Reverse	Forward
1	Small monitor, easiest positioning	7.9 (70)	2.2 (19.5)
3	Small monitor, extra holding force	8.6 (76)	6 (53)
2	Medium monitor	15.4 (136)	2.26 (20)

F	Color
50	Black
76	White

AV - D30 - 5T10 S - F

For complete installation and operation instructions please consult the product manual included in every package or available to download from www.southco.com

- **Smooth operation enhances the user experience**
- **Adjust the monitor without knobs or tools**
- **Holds securely**

Material and Finish

Aluminum alloy, powder coated

Performance Details

Cycle performance: 20,000 cycles within ± 20% of static torque specification

Maximum dynamic working load:
Model 1 and 3: 70 N (15.7 lbf)
Model 2: 100 N (22.5 lbf)
Average ultimate load: 1845 N (414.8 lbf)

Part Number

See table

Part Number Example

AV-D30-5T101-50 = Dynamic tilt mount, Model 1, black

AV Series Dynamic Mount

Tilt and swivel · Compact

- **Intuitive grab and move operation enhances the user experience**
  No knobs or tools required to reposition the monitor
  Consistent repeatable operation
- **Factory assembled and ready for use**

Product Detail

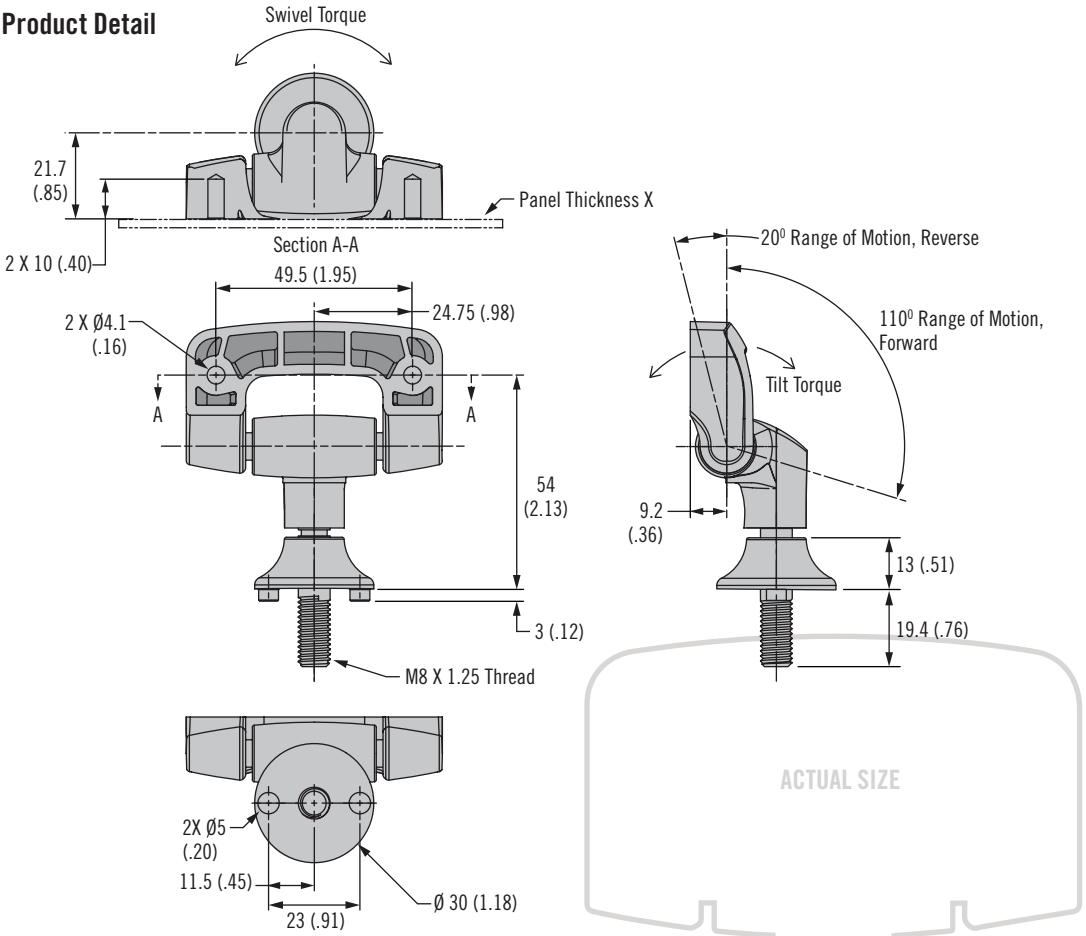

Installation Notes

1. Determine desired mounting location
2. Attach using M8 nut (not supplied) as shown

   Caution: Because of the wide variety of panel materials, it is the installer's responsibility to ensure that the materials and structure to which the product is mounted and the hardware selected will provide adequate support.
3. Attach monitor mounting bracket using recommended self-tapping screws or equivalent

Installation

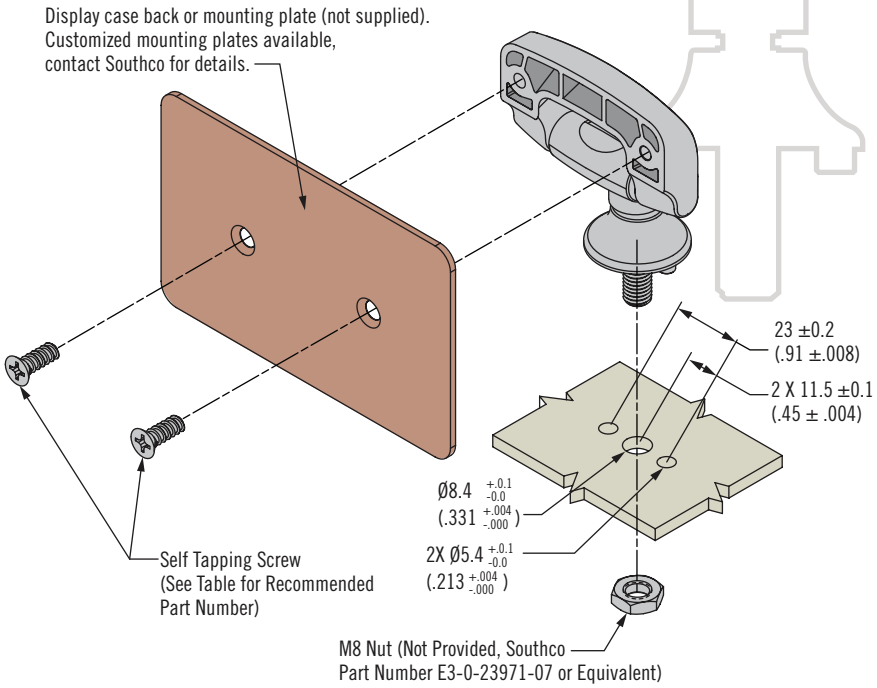

Dimensions in millimeters (inch) unless otherwise stated

southco®

Specification and Selection

Step 1
Determine monitor weight and distance (d) from mounting surface to center of gravity.

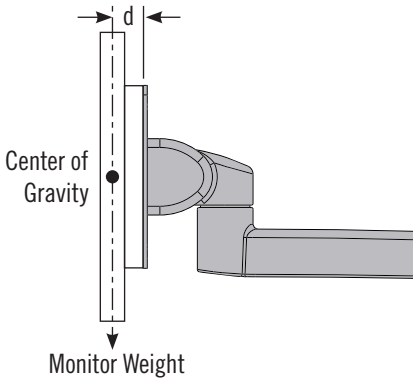

Step 2
Use chart below to confirm suitable monitor weight. For weights outside the shaded area, consider *SOUTHCO*® AV-D30 series Monitor Mounts.

AV-C20 Series - Capacity vs. CG Distance

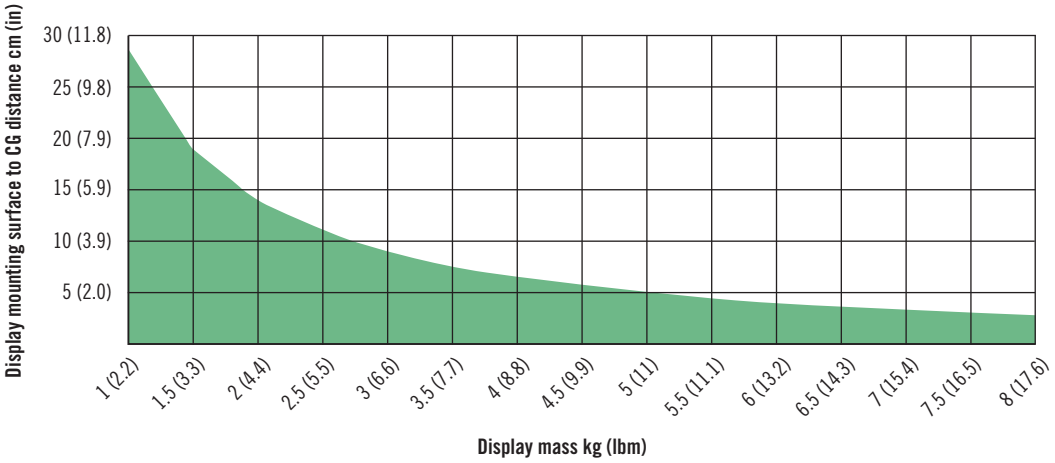

Step 3
Select part number and recommended monitor mounting hardware below:

Part Numbers	Tilt Torque N·m (in·lbf)	Swivel Torque N·m (in·lbf)
AV-C20-K101-20	2.8 (25.0)	2.1 (19.0)

Recommended monitor mounting hardware:

Panel Thickness, X (mm)	Pan-Head Screw (Southco P/N)	Flat-Head Screw (Southco P/N)
1-4	96-79-1	96-79-11
4-7	96-79-2	96-79-12

- **Smooth operation enhances the user experience**
- **Adjust the monitor without knobs or tools**
- **Holds securely in every position**

Material and Finish
Glass-filled nylon, black;
Stainless steel

Performance Details
Cycle performance: 20,000 cycles

Max dynamic working load: 100 N (22.5 lbf)

Average ultimate load: 1000 N (225 lbf)

AV Series Dynamic Mount

Tilt and swivel

- **Intuitive grab and move operation enhances the user experience**
  - No knobs or tools required to reposition the monitor
  - Precise control of operating effort ensures ideal “feel” and eliminates “drift”
  - Holds securely, even in applications with dynamic loading
- **Consistent repeatable operation**
- **Factory assembled and ready for use**

Installation

1. Determine desired mounting location
2. Attach using M6 X 1 screws as shown

Caution: Because of the wide variety of available wall materials, it is the installer’s responsibility to ensure that the materials and structure to which the arm is mounted, and the hardware selected will provide adequate support.

3. Attach monitor using manufacturer’s recommended hardware
4. Remove and recycle the shipping clip

Product Detail

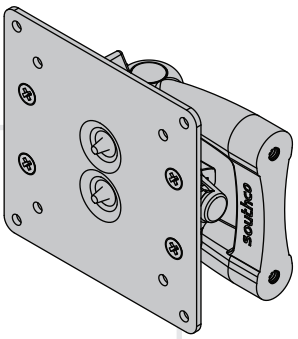

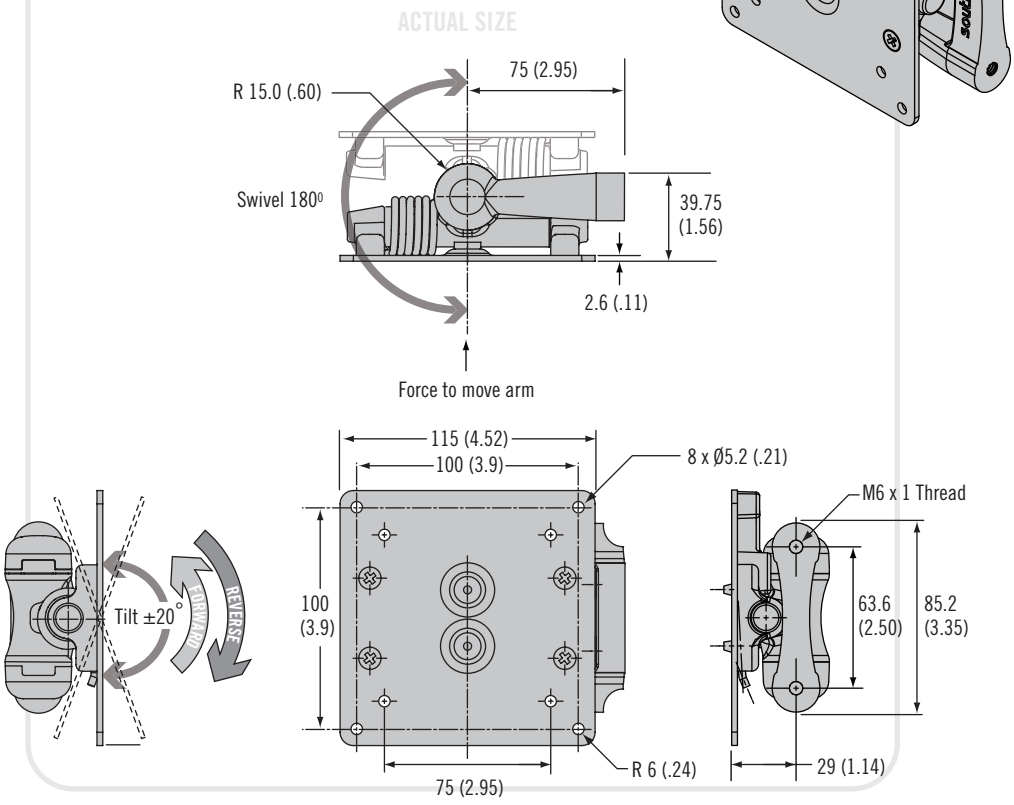

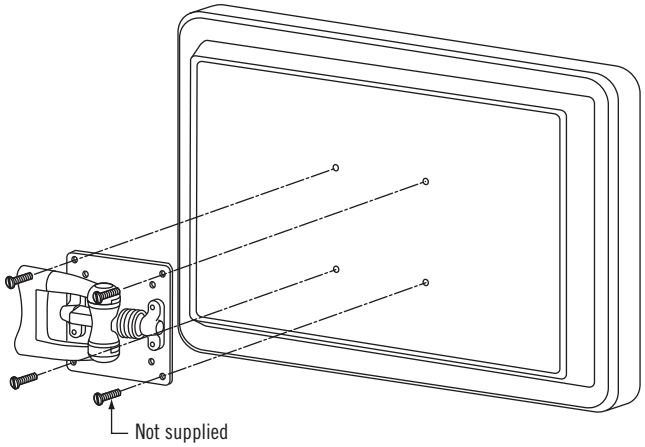

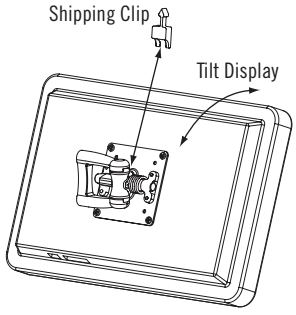

Dimensions in millimeters (inch) unless otherwise stated

AV Series Dynamic Mount

Tilt and swivel

Specification and Selection

Step 1

Determine monitor weight and distance (d) from mounting surface to center of gravity.

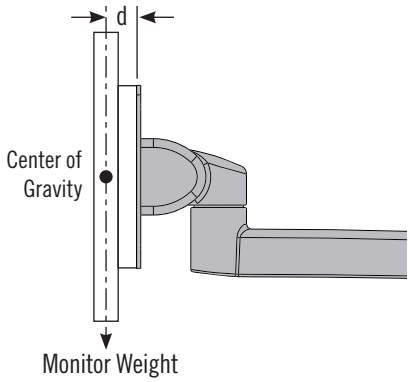

Step 2

Use chart below to select model (1, 2 or 3).

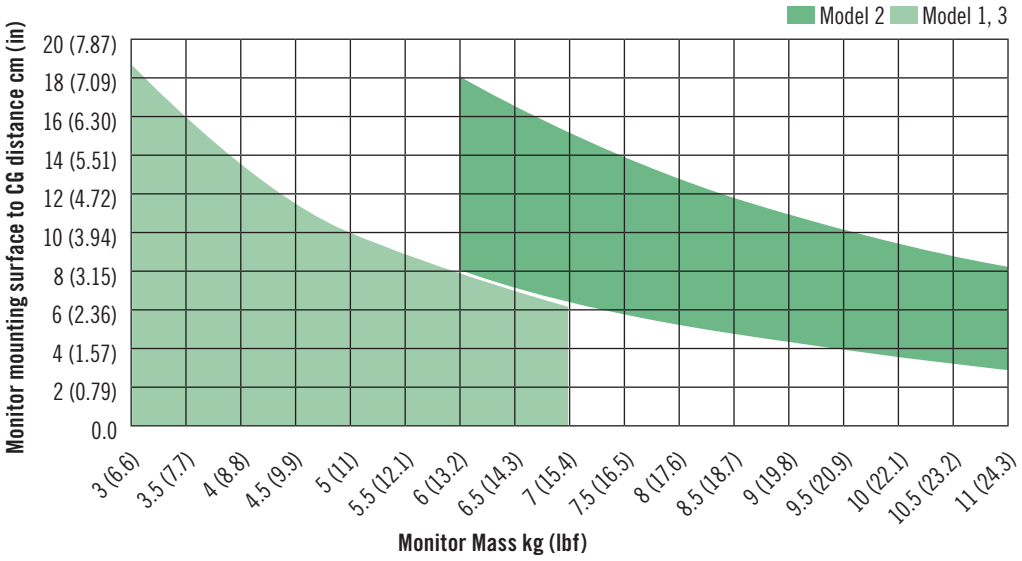

Step 3

Complete part number by selecting model and color options below.

Model S	Monitor size	Tilt Torque N·m (in·lbf)		Swivel Torque
		Reverse	Forward	
1	Small monitor, easiest positioning	7.9 (70)	1.13 (10)	2.3 (20)
3	Small monitor, extra holding force	8.6 (76)	6 (53)	3.4 (30)
2	Medium monitor	15.4 (136)	2.26 (20)	3.4 (30)

AV - D30 - 7K10 S - F

F	Color
50	Black
76	White

For complete installation and operation instructions please consult the product manual included in every package or available to download from www.southco.com/AV

- **Smooth operation enhances the user experience**
- **Adjust the monitor without knobs or tools**
- **Holds securely in every position**

Material and Finish

Aluminum alloy, powder coated

Performance Details

Cycle performance: 20,000 cycles within ± 20% of static torque specification

Maximum dynamic working load:
Model 1 and 3: 66 N (15 lbf)
Model 2: 98 N (22 lbf)
Average ultimate load: 178 N (450 lbf)

Part Number

See table

Part Number Example

AV-D30-7K101-50 = Dynamic mounting arm, Model 1, black

AV Series Dynamic Mounting Arm

Tilt and swivel · Single arm · Double arm

- **Intuitive grab and move operation enhances the user experience**
  No knobs or tools required to reposition the monitor
  Precise control of operating effort ensures ideal “feel” and eliminates “drift”
  Holds securely, even in applications with dynamic loading
- **Consistent repeatable operation**
- **Fully enclosed for optimum cleanability**
- **Snap-on wire management cover**
- **Factory assembled and ready for use**

For mounting options and installation detail please refer to pages 84-85

Tilt and Swivel

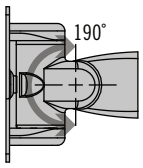

Single Arm

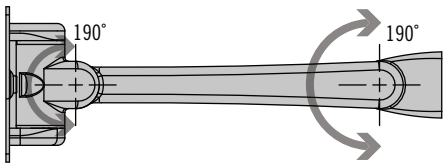

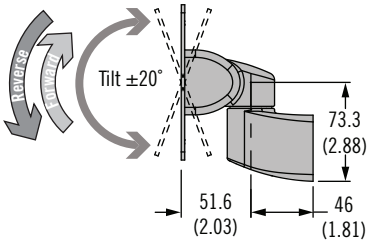

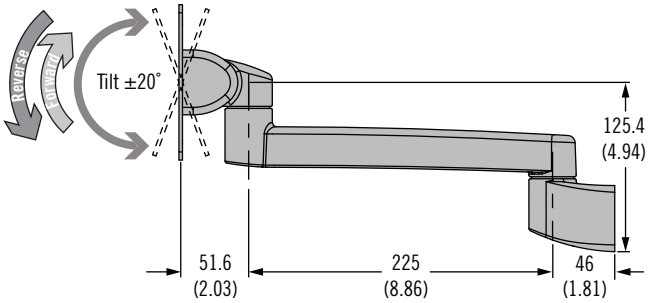

Double Arm

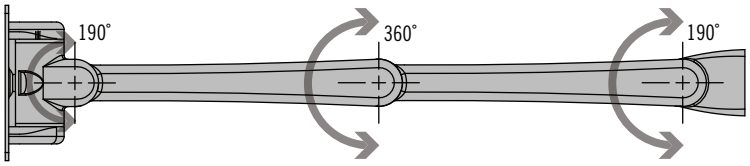

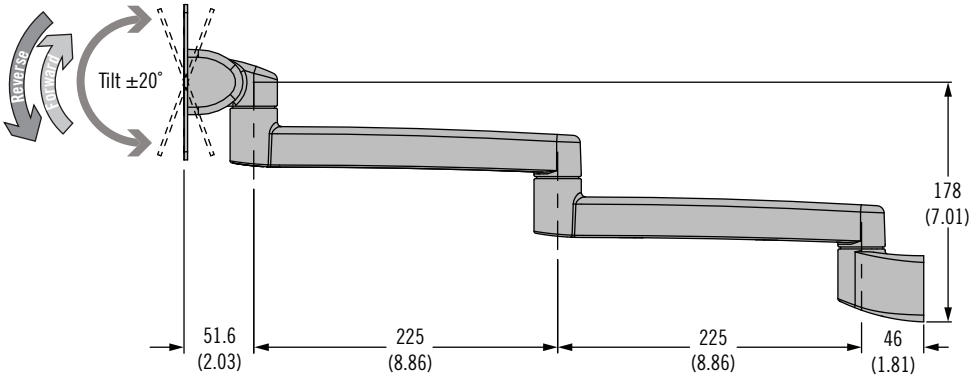

Dimensions in millimeters (inch) unless otherwise stated

AV Series Dynamic Mounting Arm

Tilt and swivel · Single arm · Double arm

Specification and Selection

Step 1
Determine monitor weight and distance (d) from mounting surface to center of gravity.

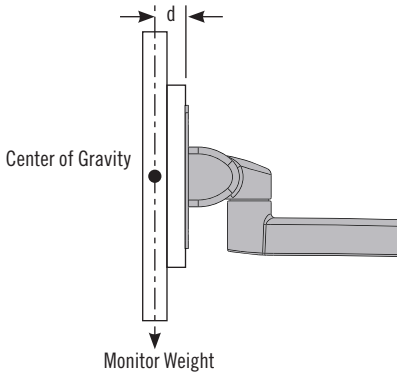

Step 2
Use chart below to select model (1, 2 or 3).

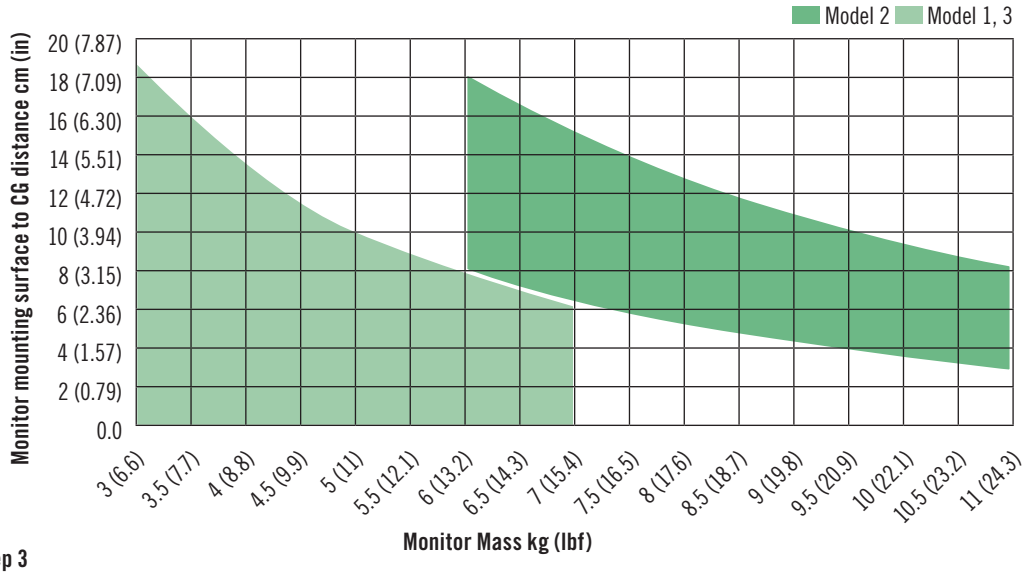

Step 3
Complete part number by selecting length and color options below.

L	Length & Function
10K	Tilt / swivel
23A	225mm Single arm
46D	450mm Double arm

K	Mounting style
0	Wall mount, Rear, no wire notch
1	Wall mount, Rear, with wire notch
2	Table mount, no wire notch
3	Table mount, with wire notch
4	Wall mount, Front
6	Pole mount (35-38mm Pole)
7	Rail mount

AV - D32 - L 1 K S - F

S	Monitor Size
1	Small monitor, easiest positioning
3	Small monitor, extra holding force
2	Medium monitor

F	Finish
50	Black
76	White

Style	Model S	Tilt Torque N·m (in·lbf)		Swivel Torque N·m (in·lbf)		
		Reverse	Forward	At Monitor Mount	At Wall Mount	Center Joint
Tilt and swivel	1	7.9 (70)	1.13 (10)	4.3 (38)	N/A	N/A
	2	15.4 (136)	2.26 (20)	4.3 (38)	N/A	N/A
	3	8.6 (76)	6.0 (53)	4.3 (38)	N/A	N/A
Single arm	1	7.9 (70)	1.13 (10)	4.3 (38)	9.8 (87)	N/A
	2	15.4 (136)	2.26 (20)	4.3 (38)	9.8 (87)	N/A
	3	8.6 (76)	6.0 (53)	4.3 (38)	9.8 (87)	N/A
Double arm	1	7.9 (70)	1.13 (10)	4.3 (38)	9.8 (87)	9.8 (87)
	2	15.4 (136)	2.26 (20)	4.3 (38)	9.8 (87)	9.8 (87)
	3	8.6 (76)	6.0 (53)	4.3 (38)	9.8 (87)	9.8 (87)

Part Number Example
AV-D32-23A101-50 =
Single arm, Model 1, wall mount, no wire notch, black

Material and Finish

Aluminum alloy, powder coated

Performance Details

Cycle performance: 20,000 cycles. See trade drawing for details.
Note: Double Arm not recommended for monitors over 5.4 kg (12 lb)

Max. dynamic working load:
Model 1, 3: 70N (15.7lbf)
Model 2: 100N (22.5lbf)
Average ultimate load:
Tilt/Swivel: 1845N (415lbf)
Single Arm: 1600N (360lbf)
Double Arm: 755N (170lbf)

For mounting options and installation detail please refer to pages 84-85

AV Series Dynamic Mounting Arm

Tilt and swivel · Single arm · Double arm · Heavy Duty

- **Intuitive grab and move operation enhances the user experience**
  - No knobs or tools required to reposition the monitor
  - Precise control of operating effort ensures ideal “feel” and eliminates “drift”
  - Holds securely, even in applications with dynamic loading
- **Consistent repeatable operation**
- **Fully enclosed for optimum cleanability**
- **Snap-on wire management cover**
- **Factory assembled and ready for use**

For mounting options and installation detail please refer to pages 84-85

Tilt and Swivel

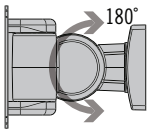

Single Arm

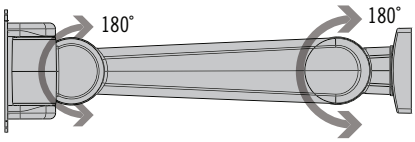

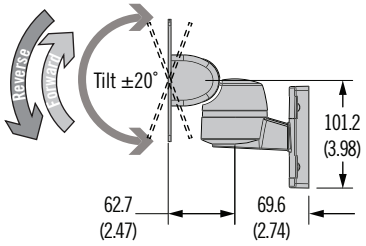

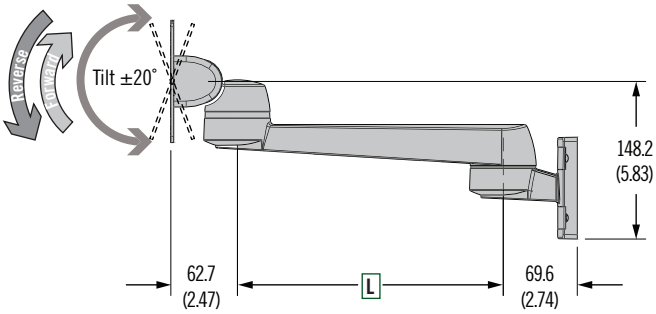

Double Arm

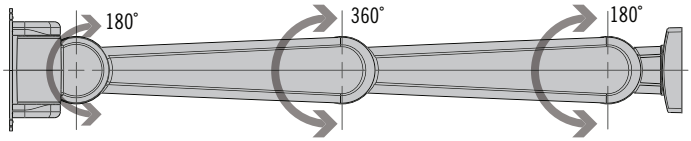

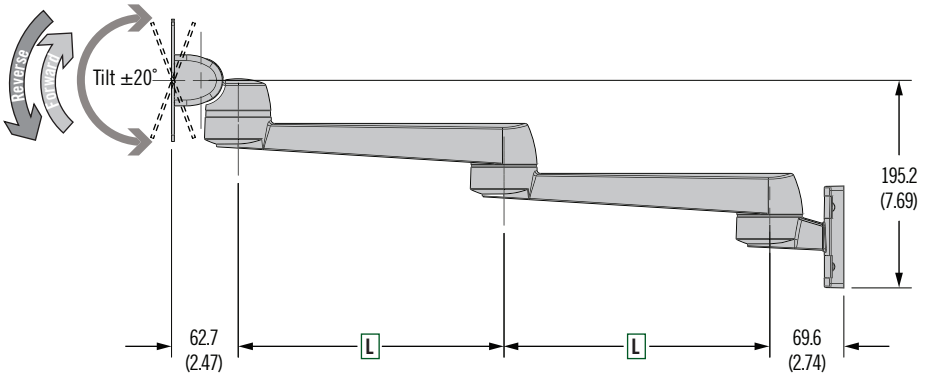

Dimensions in millimeters (inch) unless otherwise stated

AV Series Dynamic Mounting Arm

Tilt and swivel · Single arm · Double arm · Heavy Duty

Specification and Selection

Step 1
Determine monitor weight and distance (d) from mounting surface to center of gravity.

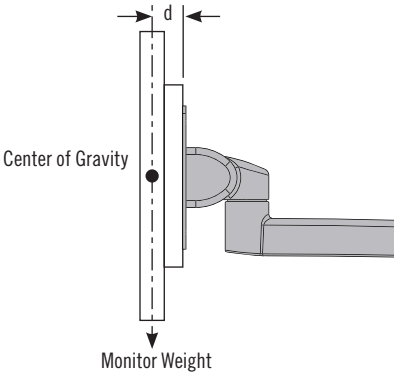

Step 2
Use chart below to select model (1, 2, 3 or 4).
Note: Double Arm not recommended for monitors over 18 kg (39 lb)

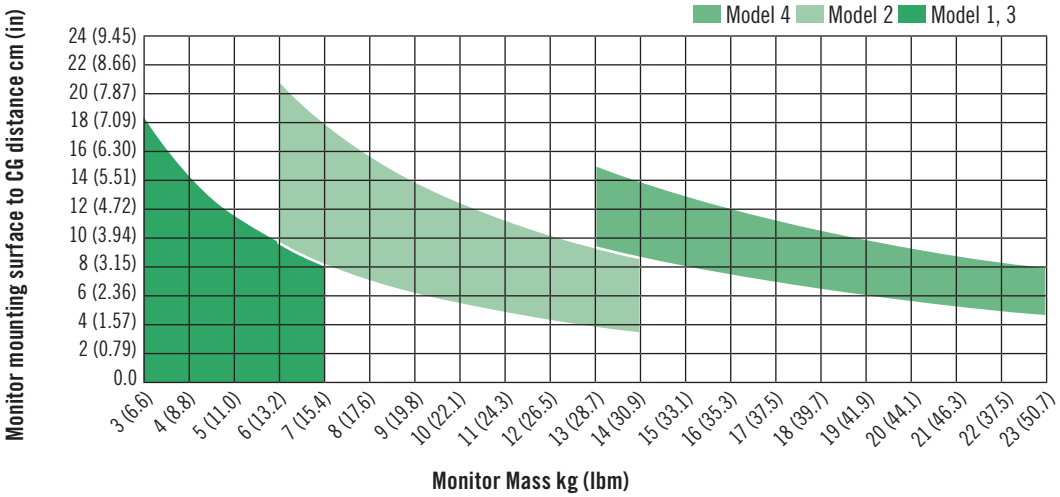

Step 3
Complete part number by selecting length and color options below.

L	Length & Function
13K	Tilt / swivel
25A	250mm Single arm
33A	325mm Single arm
50D	500mm Double arm
65D	650mm Double arm

K	Mounting style
4	Wall mount, Front
6	Pole mount (35-38mm Pole)
7	Rail mount

AV - D40 - L 1 K S - F

S	Monitor size
1	Small monitor, easiest positioning
3	Small monitor, extra holding force
2	Medium monitor
4	Large monitor

F	Finish
50	Black
76	White

Style	Model	Tilt Torque N·m (in·lbf)		Swivel Torque N·m (in·lbf)		
		Reverse	Forward	At Monitor Mount	At Wall Mount	Center Joint
Tilt and swivel	1	7.9 (70)	1.3 (10)	3 (27)	N/A	N/A
	2	15.4 (136)	2.26 (20)	3 (27)	N/A	N/A
	3	8.6 (76)	6.0 (53)	3 (27)	N/A	N/A
	4	23.1 (204)	7 (62)	3 (27)	N/A	N/A
Single arm	1	7.9 (70)	1.3 (10)	3 (27)	6 (53)	N/A
	2	15.4 (136)	2.26 (20)	3 (27)	6 (53)	N/A
	3	8.6 (76)	6.0 (53)	3 (27)	6 (53)	N/A
	4	23.1 (204)	7 (62)	3 (27)	6 (53)	N/A
Double arm	1	7.9 (70)	1.3 (10)	3 (27)	6 (53)	3 (27)
	2	15.4 (136)	2.26 (20)	3 (27)	6 (53)	3 (27)
	3	8.6 (76)	6.0 (53)	3 (27)	6 (53)	3 (27)
	4	23.1 (204)	7 (62)	3 (27)	6 (53)	3 (27)

Material and Finish

Aluminum alloy, powder coated

Performance Details

Cycle performance: 20,000 cycles. See trade drawing for details.
Note: Double Arm not recommended for monitors over 18 kg (39 lb)

Max. dynamic working load:
Model 1, 3: 70 N (15.7 lbf)
Model 2: 100 N (22.5 lbf)
Model 4: 225 N (50.5 lbf)
Average ultimate load:
Tilt/Swivel: 2300 N (517 lbf)
Single Arm: 1600 N (360 lbf)
Double Arm: 1050 N (236 lbf)

Part Number Example

AV-D40-25A142-50 = Single arm, 250mm, Model 2, black

AV Series Dynamic Mounting Arm

Tilt and swivel · Single arm · Non-locking · Locking

- **Intuitive grab and move operation enhances the user experience**
  No knobs or tools required to reposition the monitor
  Precise control of operating effort ensures ideal “feel” and eliminates “drift”
  Holds securely, even in applications with dynamic loading
- **Locking mechanism in stowed position**
- **Low profile in the stowed position**
  Folds to within 50 mm of the wall
- **Snap-open channels simplify wire management**
  Easy monitor installation and replacement
- **Factory assembled and ready for use**

Product Detail

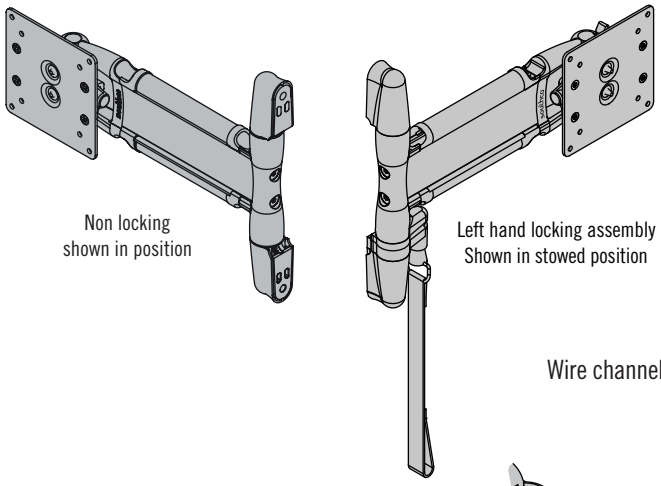

Wire channel in open position.

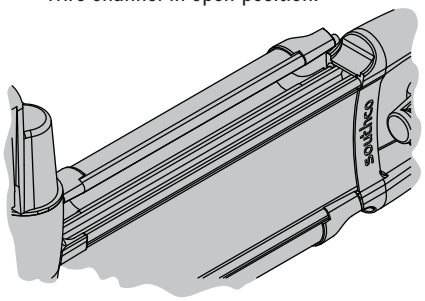

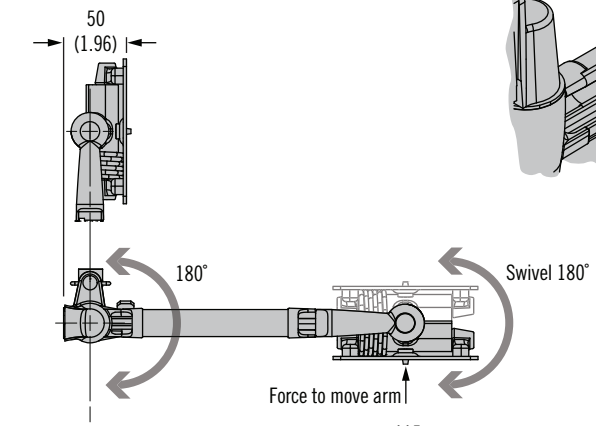

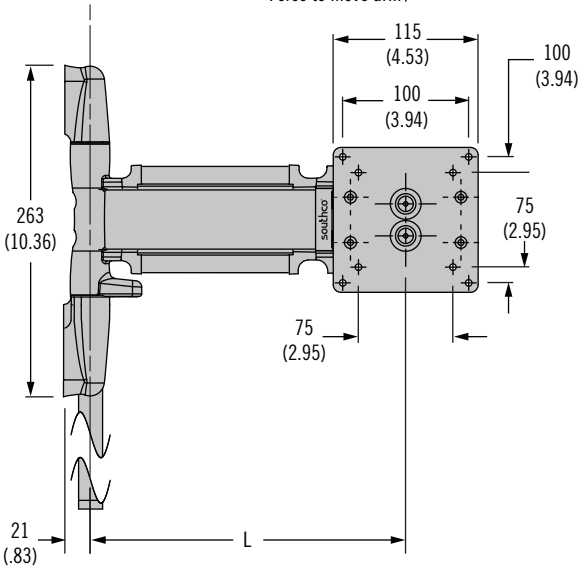

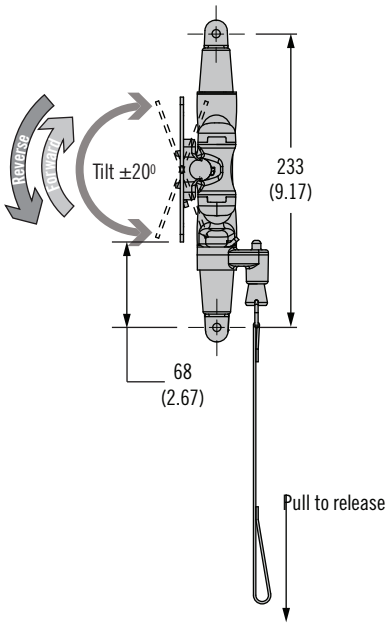

Dimensions in millimeters (inch) unless otherwise stated

AV Series Dynamic Mounting Arm

Tilt and swivel · Single arm · Non-locking · Locking

- **Smooth operation enhances the user experience**
- **Adjust the monitor without knobs or tools**
- **Holds securely in every position**

Specification and Selection

Step 1

Determine monitor weight and distance (d) from mounting surface to center of gravity.

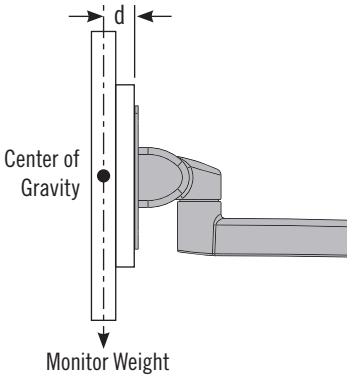

Step 2

Use chart below to select model (1, 2 or 3).

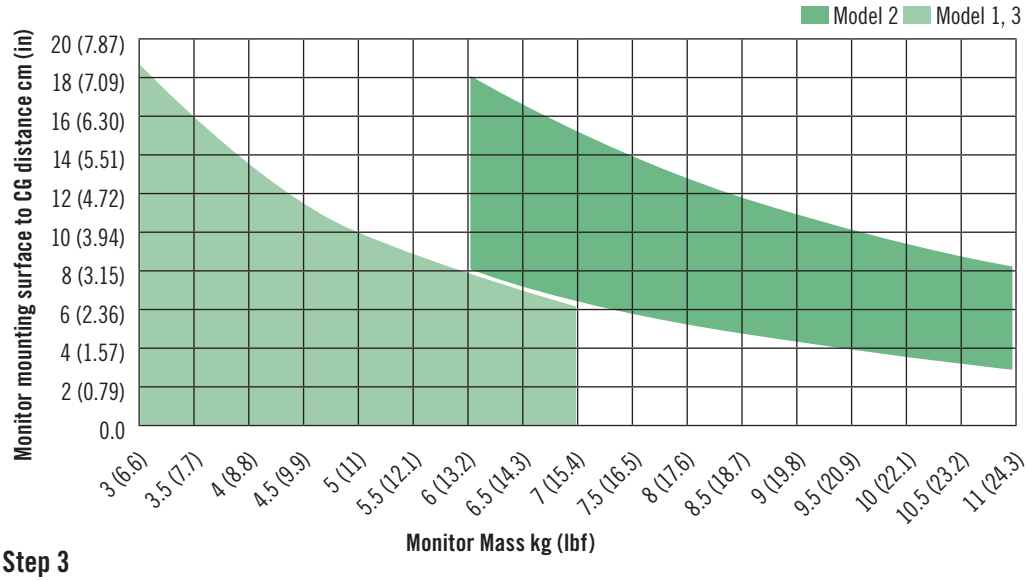

Step 3

Complete part number by selecting length and color options below.

AV - D30 - K A L 10 S - F

K	Length (L)	Average ultimate load N (lbf)
15	150 (5.9)	2000 (450)
25	250 (9.8)	1200 (270)
35	350 (13.8)	850 (190)
45	450 (17.7)	660 (150)

F	Color
50	Black
76	White

Model S	Force to move arm N (lbf)	Tilt Torque N·m (in lbf)		Swivel Torque N·m (in lbf)
		Reverse	Forward	
1	22.2 (5)	7.9 (70)	1.13 (10)	2.3 (20)
2	33.8 (7.6)	15.4 (136)	2.26 (20)	3.4 (30)
3	33.8 (7.6)	8.6 (76)	6.0 (53)	3.4 (30)

L	Rotational Lock
C	Left hand locking
R	Right hand locking
Omit	Non locking

Material and Finish

Aluminum alloy, powder coated

Performance Details

Cycle performance: 20,000 cycles within ± 20% of static torque specification

Max. dynamic working load:
Model 1, 3: 66 N (15 lbf)
Model 2: 98 N (22 lbf)
Average ultimate load: See table

Part Number

See table

Part Number Example

AV-D30-25AC101-50 = Dynamic mounting arm, Model 1, 250 mm Length, black, locking

Southco Performance and Application Guidelines are supplied as general guides only, as conditions vary with each application and installation method. Represented cycle performance is not a guarantee of reliability under actual usage conditions in end user product applications. Users must test potential product solutions under the actual application conditions and environment to determine suitability of the product for the purpose and function intended by the user and to assure desired performance.

AV Series Dynamic Mounting Arm

Tilt and swivel · Height adjustment · Single arm

- **Intuitive grab and move operation enhances the user experience**
  No knobs or tools required to reposition the monitor
  Precise control of operating effort ensures ideal “feel” and eliminates “drift”
- **Screw-fit covers to secure cables**
  Easy monitor installation and replacement
- **Factory assembled and ready for use**

Product Detail

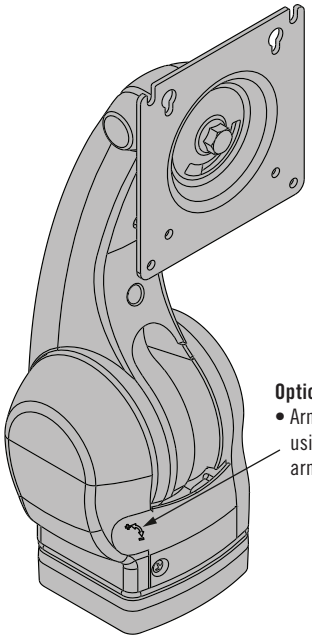

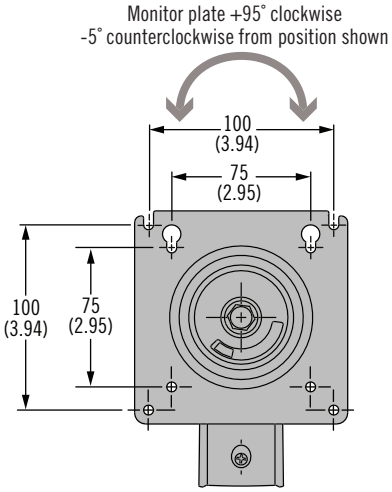

Optional adjustable version
- Arm counterbalance adjustment using 8mm hex key inside lower arm front cover

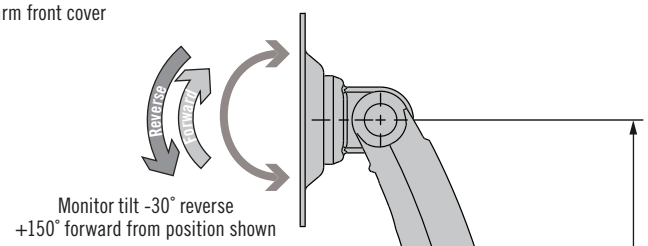

Panel Preparation

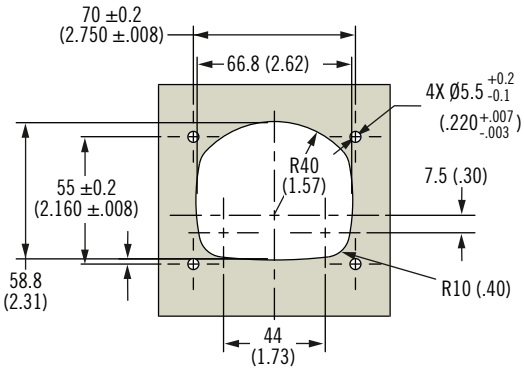

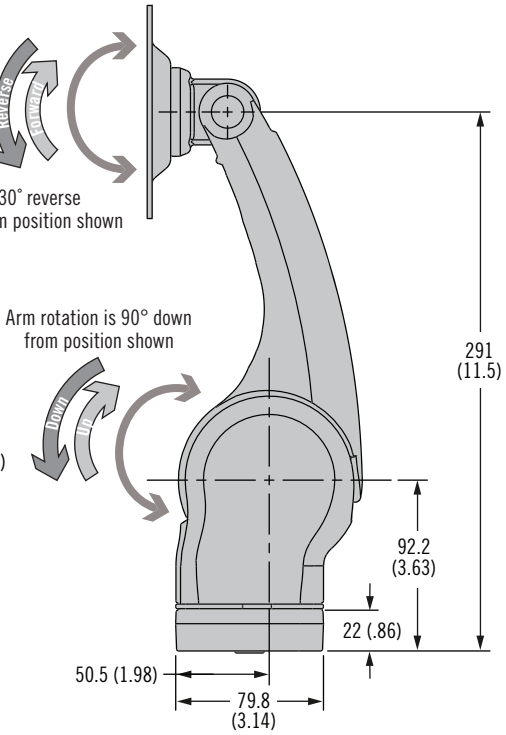

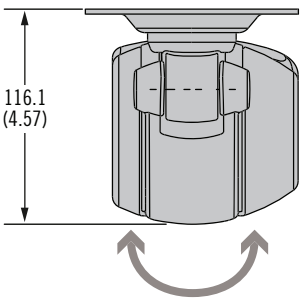

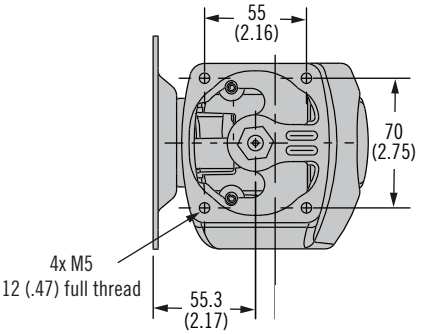

Dimensions in millimeters (inch) unless otherwise stated

AV Series Dynamic Mounting Arm

Tilt and swivel · Height adjusting · Single arm

- **Smooth operation enhances the user experience**
- **Adjust the monitor without knobs or tools**
- **Holds securely in every position**

Specification and Selection

Step 1

Determine monitor weight and distance (d) from mounting surface to center of gravity.

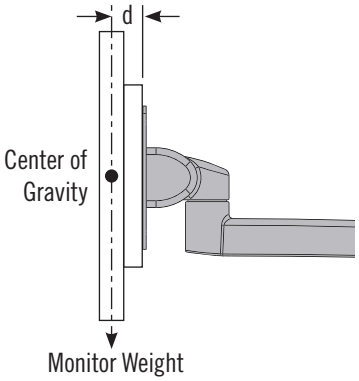

Step 2

Use chart below to select model

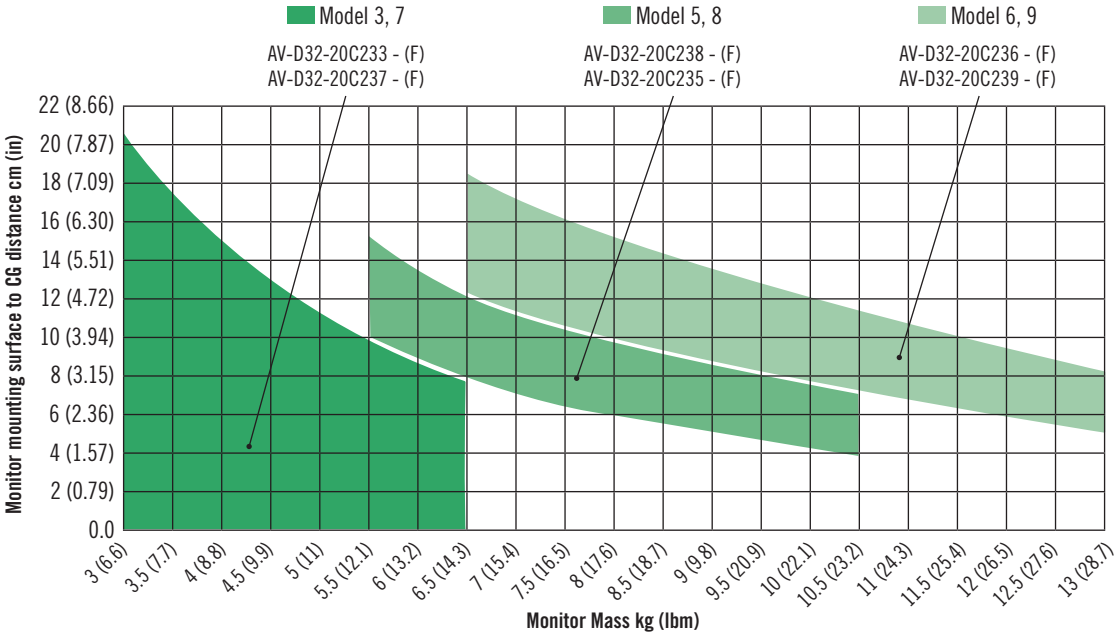

Step 3

Complete part number by selecting adjustment type and color options below.

Model [S]	Adjustable	Monitor mass kg (lbm)	Tilt Torque N·m (in lbf)		Swivel Torque N·m (in lbf)
			Reverse	Forward	
3	No	3.6 - 6.8 (8-15)	8.0 (70.8)	6.4 (56.9)	2.8 (24.8)
5	No	5.6 - 10.4 (12.3-22.9)	11.3 (100.5)	8.5 (75.2)	
6	No	6 - 13 (13.2 - 22.9)	14.7 (130)	10.5 (93.6)	
7	Yes	Max 6.8 (15)	8.0 (70.8)	6.4 (56.9)	
8	Yes	Max 10.4 (22.9)	11.3 (100.5)	8.5 (75.2)	
9	Yes	Max 13 (28.7)	14.7 (130)	10.5 (93.6)	

AV - D32 - 20C23 [S] - [F]

[F]	Color
50	Black
76	White

Material and Finish

Aluminum alloy, powder coated steel & polymer components

Performance Details

Cycle performance: 20,000 cycles within ± 20% of static torque specification

Max. dynamic working load:
See part table
Ultimate load:
1181N (265 lbm) downward
540N (121 lbm) upward

Part Number

See table

AV Series Dynamic Mounting Arm

Tilt and swivel · Single arm · Height Adjusting

- **Intuitive grab and move operation enhances the user experience**

  No knobs or tools required to reposition the monitor

  Precise control of operating effort ensures ideal “feel” and eliminates “drift”

  Holds securely, even in applications with dynamic loading

- **Consistent repeatable operation**
- **Fully enclosed for optimum cleanablility**
- **Snap-open channels simplify wire management**
- **Factory assembled and ready for use**

For mounting options and installation detail please refer to pages 84-85

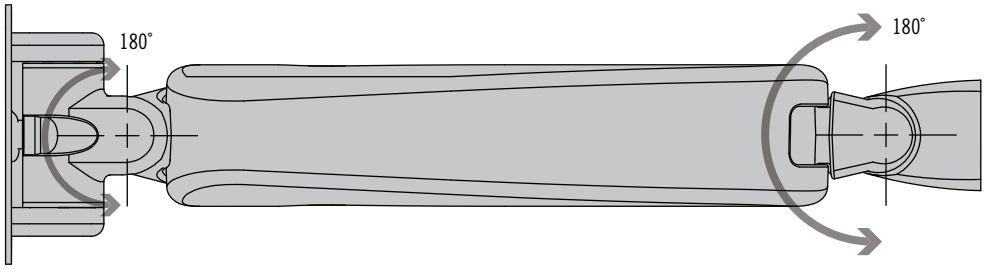

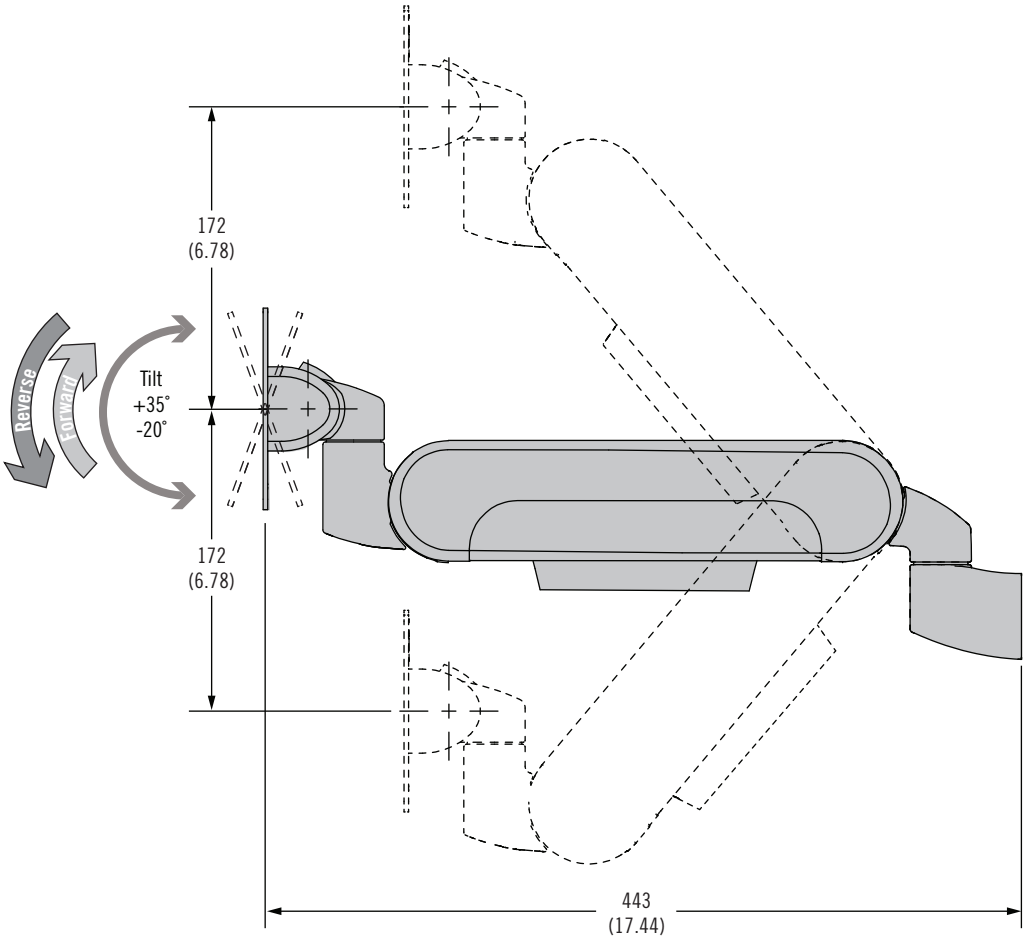

Dimensions in millimeters (inch) unless otherwise stated

southco®

AV Series Dynamic Mounting Arm

Tilt and swivel · Single arm · Height Adjusting

Specification and Selection

Step 1

Determine monitor weight and distance (d) from mounting surface to center of gravity.

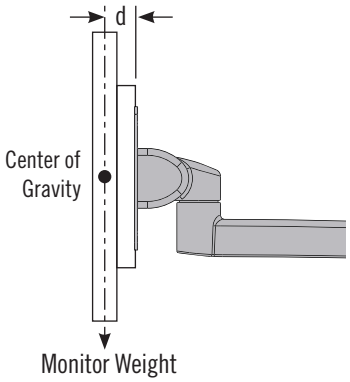

Step 2

Use chart below to select model (1, 2 or 3).

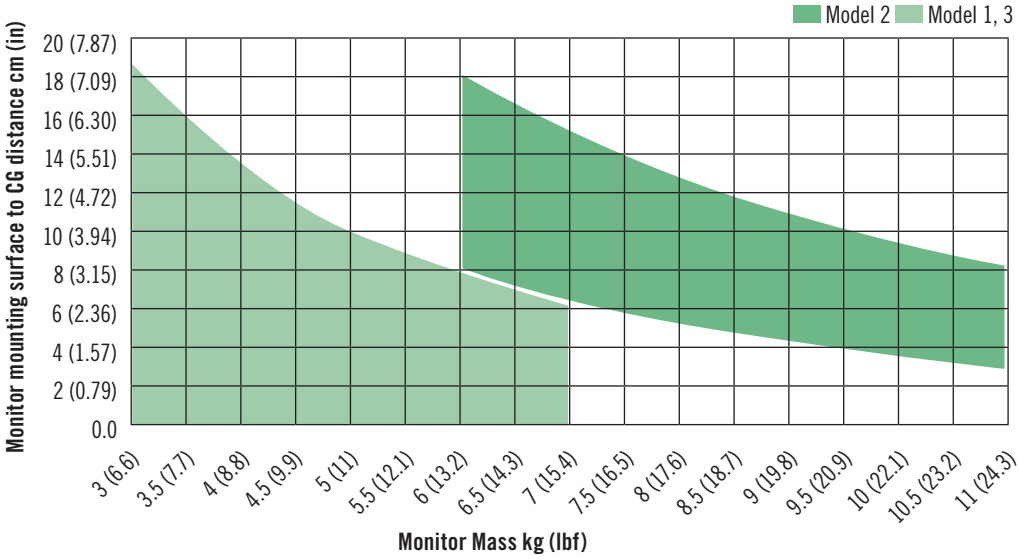

Step 3

Complete part number by selecting model and color options below.

AV - D32 - 30V1 [K] [S] - [F]

K	Mounting Style
0	Wall mount, rear, no wire notch
1	Wall mount, rear, with wire notch
2	Table mount, no wire notch
3	Table mount, with wire notch
4	Wall mount, Front
6	Pole mount (35-38mm Pole)
7	Rail mount

F	Color
50	Black
76	White

S	Monitor Size
1	Small monitor, easiest positioning
3	Small monitor, extra holding force
2	Medium monitor

Material and Finish

Aluminum alloy, powder coated

Performance Details

Cycle performance: 20,000 cycles.

Swivel Torque:
At Device Mount: 4.3 N-m (38 in-lbf)
At Wall Mount: 6.0 N-m (53 in-lbf)

Average ultimate load: 665N (150lbf)

See trade drawing for details.

Part Number Example:
AV-D32-30V101-50 = Single Arm, Model 1, wall mount, no wire notch, black

AV Series Dynamic Mounting Arm

Tilt and swivel · Double arm · Height Adjusting

- **Intuitive grab and move operation enhances the user experience**
  - No knobs or tools required to reposition the monitor
  - Precise control of operating effort ensures ideal “feel” and eliminates “drift”
  - Holds securely, even in applications with dynamic loading
- **Consistent repeatable operation**
- **Fully enclosed for optimum cleanablility**
- **Snap-open channels simplify wire management**
- **Factory assembled and ready for use**
- **Optional locking mechanism in stowed position**

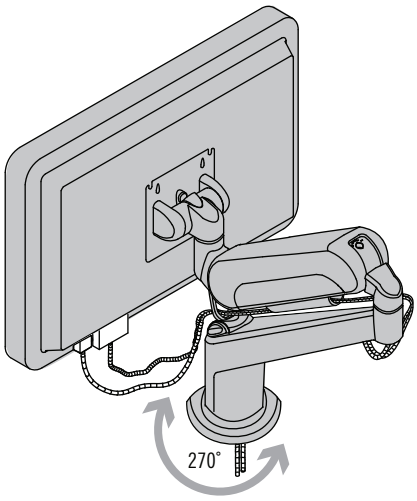

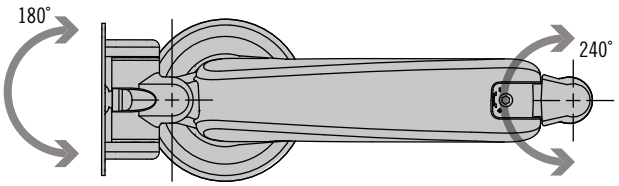

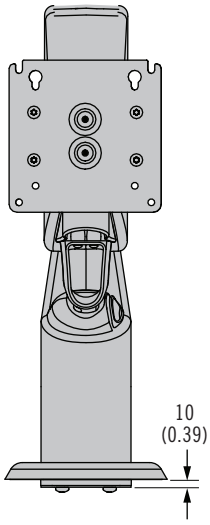

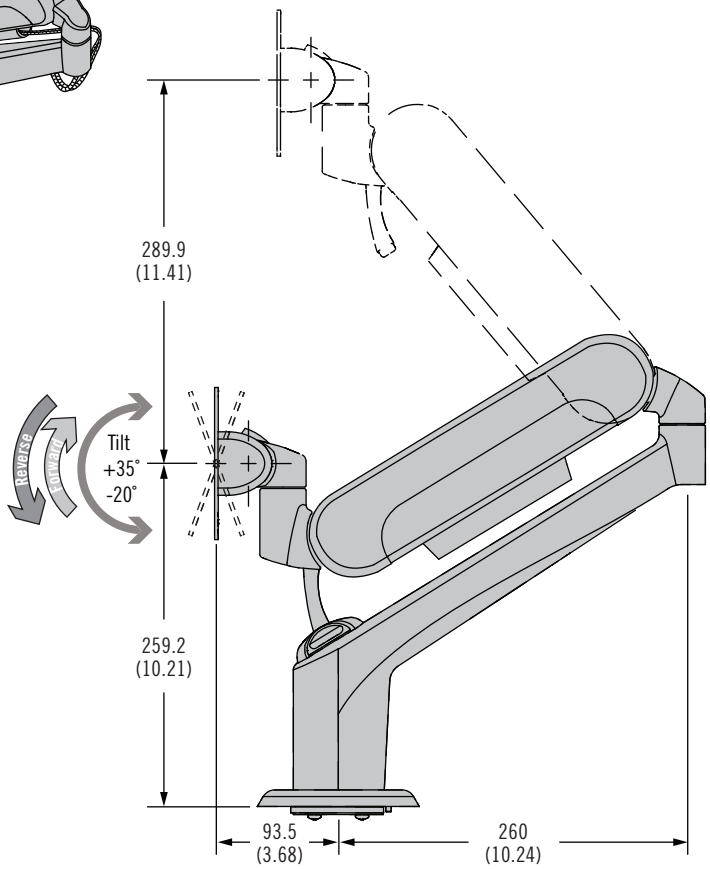

Panel Preparation

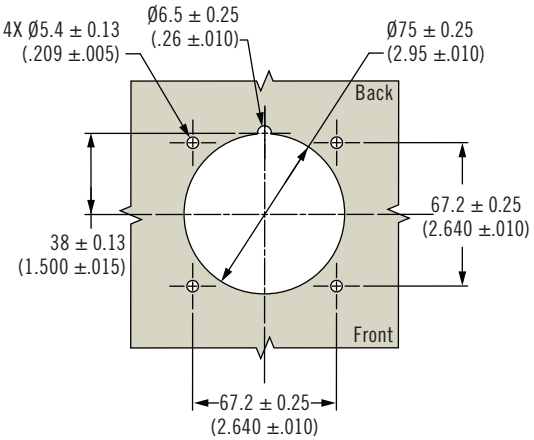

Optional Locking Mechanism

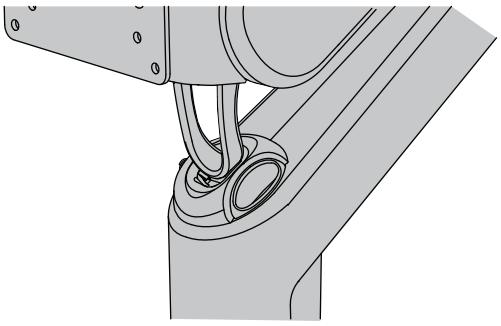

Dimensions in millimeters (inch) unless otherwise stated

AV Series Dynamic Mounting Arm

Tilt and swivel · Double arm · Height Adjusting

Specification and Selection

Step 1

Determine monitor weight and distance (d) from mounting surface to center of gravity.

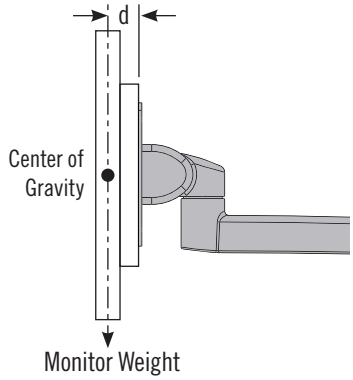

Step 2

Use chart below to select model (1, 2 or 3).

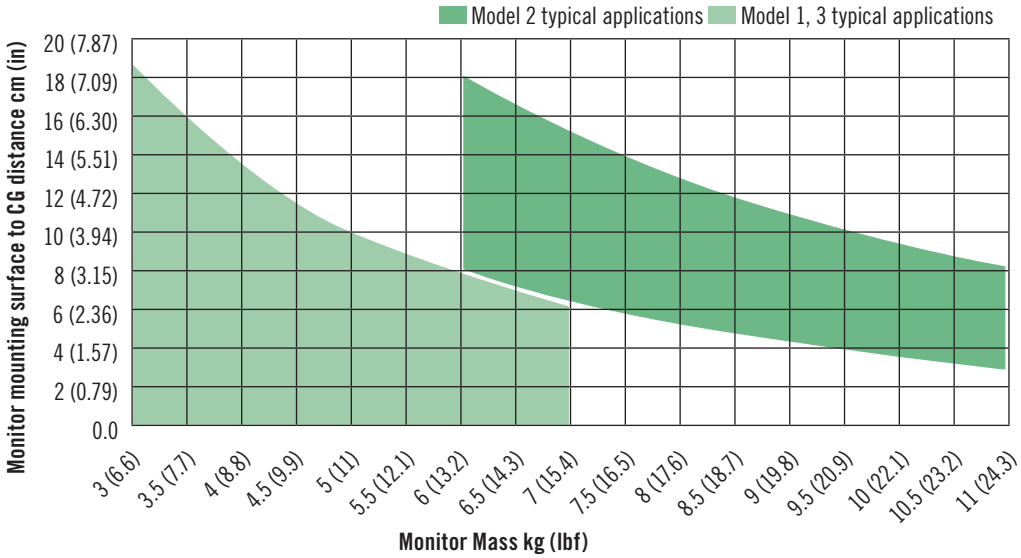

Step 3

Complete part number by selecting model and color options below.

K	Optional Locking Mechanism
C	With Locking Mechanism
Omit	Non-Locking

AV - D32-61 W [K] 13 [S] - [F]

Model [S]	Tilt Torque N·m (in lbf)		Maximum Monitor Weight kg(lb)
	Reverse	Forward	
1	7.9 (70)	1.13 (10)	7 (15)
2	15.4 (136)	2.26 (20)	10 (22)
3	8.6 (76)	6.0 (53)	7 (15)

[F]	Color
50	Black
76	White

Material and Finish

Aluminum alloy, powder coated

Performance Details

Cycle performance: 20,000 cycles.

Swivel Torque:
At Device Mount: 4.3 N-m (38 in-lbf)
At Center Joint: 6.0 N-m (53 in-lbf)
At Mounting Surface: 6.8 N-m (60 in-lbf)

Average ultimate load: 490N (110 lbf)

See trade drawing for details.

Part Number Example:
AV-D32-61WC131-50 = Model 1, locking, black

AV Series Dynamic Mounting Arm

Tilt and swivel · Double arm · Height Adjusting

- **Intuitive grab and move operation enhances the user experience**
  No knobs or tools required to reposition the monitor
  Precise control of operating effort ensures ideal “feel” and eliminates “drift”
  Holds securely, even in applications with dynamic loading
- **Consistent repeatable operation**
- **Fully enclosed for optimum cleanablility**
- **Snap-open channels simplify wire management**
- **Factory assembled and ready for use**

For mounting options and installation detail please refer to pages 84-85

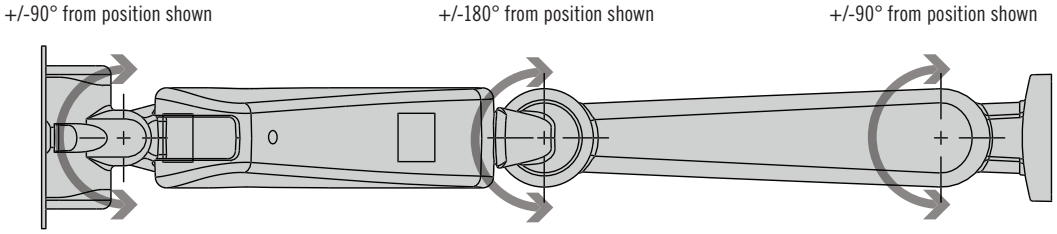

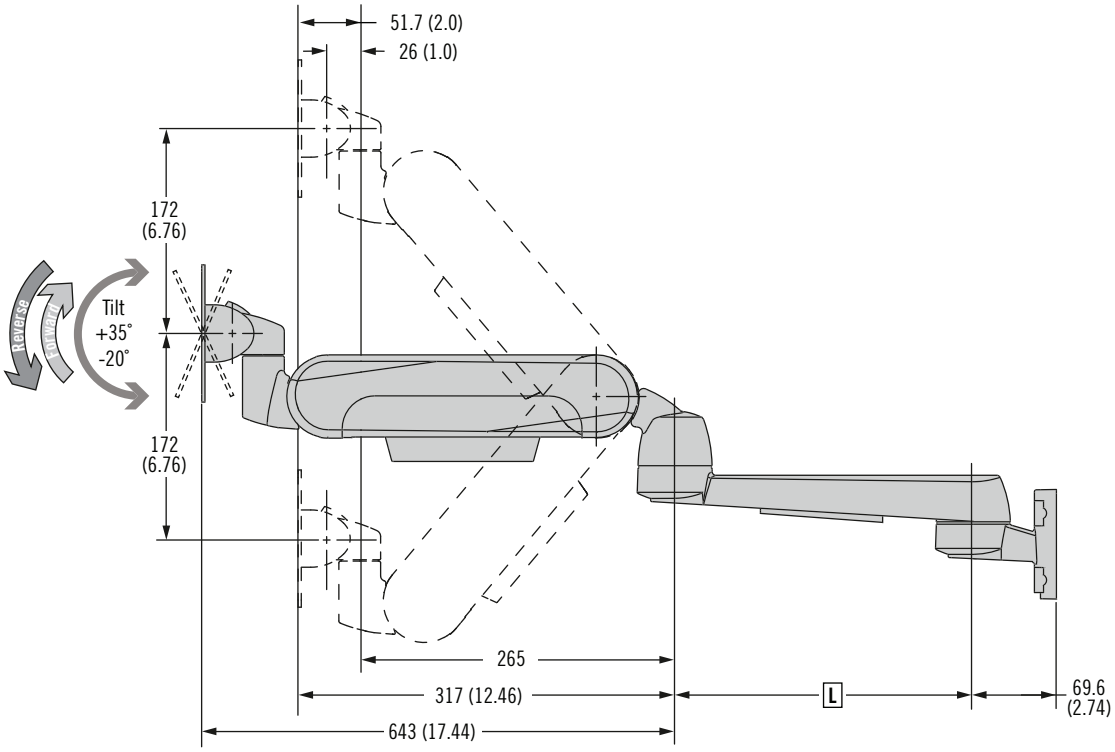

Dimensions in millimeters (inch) unless otherwise stated

southco®

AV Series Dynamic Mounting Arm

Tilt and swivel · Double arm · Height Adjusting

Specification and Selection

Step 1

Determine monitor weight and distance (d) from mounting surface to center of gravity.

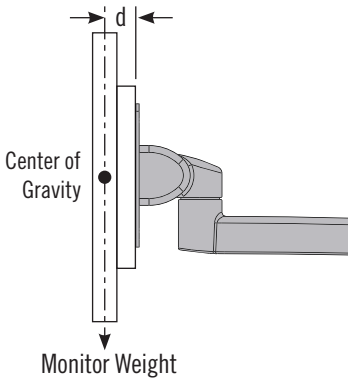

Step 2

Use chart below to select model (1, 2 or 3).

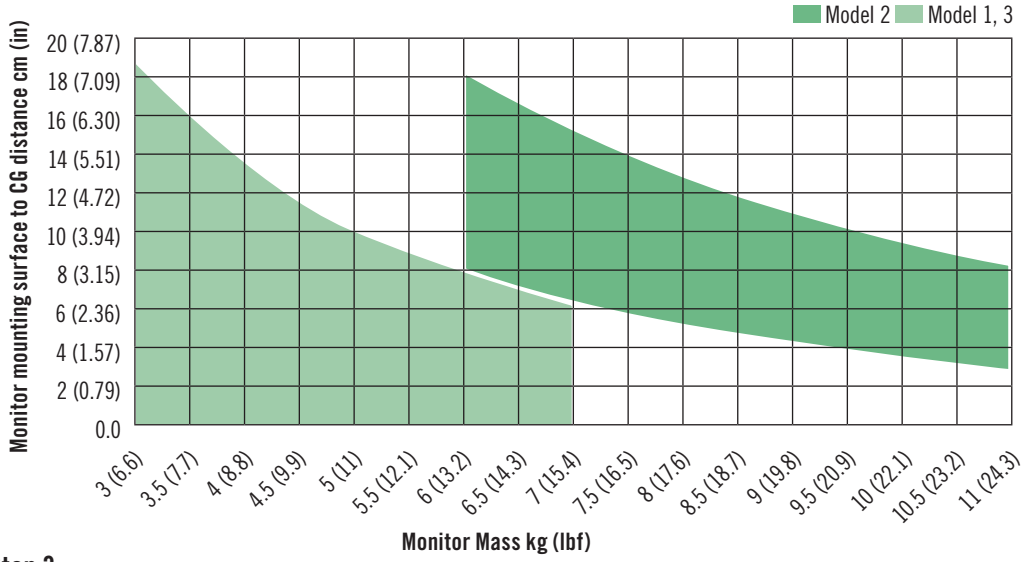

Step 3

Complete part number by selecting model and color options below.

AV - D32 - [L] 1 [K] [S] - [F]

[L]	Length
72W	Height adjusting + 250mm lateral arm
79W	Height adjusting + 325mm lateral arm

[F]	Color
50	Black
76	White

[S]	Monitor Size
1	Small monitor, easiest positioning
3	Small monitor, extra holding force
2	Medium monitor

[K]	Mounting Style
4	Wall mount, Front
6	Pole mount (35-38mm Pole)
7	Rail mount

Material and Finish

Aluminum alloy, powder coated

Performance Details

Cycle performance: 20,000 cycles.

Swivel Torque:
At Device Mount: 4.3 N-m (38 in-lbf)
At Center Joint: 6.0 N-m (53 in-lbf)
At Mounting Surface: 6.0Nm (53in-lbf)

Average ultimate load: 490N (110 lbf)

See trade drawing for details.

Part Number Example:
AV-D32-72W141-50 = 250mm lower arm, Model 1, wall mount, black

AV Series Dynamic Mounting Arm

Tilt and swivel · Single arm · Double arm · Mounting details

- **Mounting details**

Mounting Options

Monitor Mounting Plate

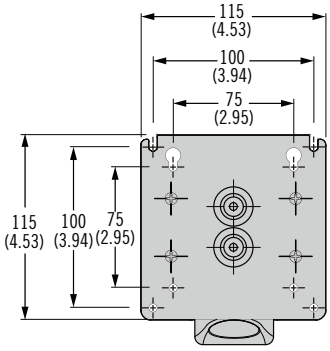

Wall mount front fastened K=4

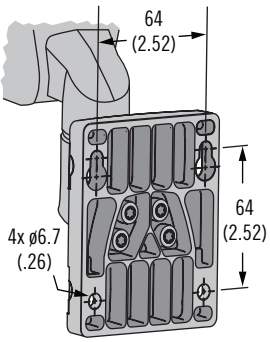

Wall Mount, Rear Fastened K=0

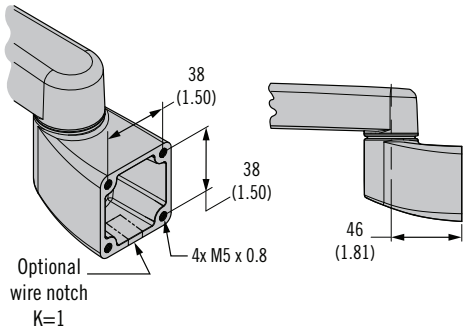

Table Mount K=2

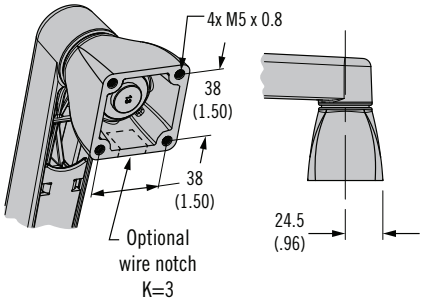

Pole Mount K=6

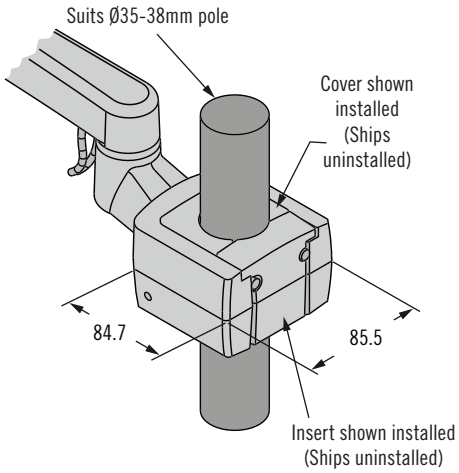

Rail Mount K=7

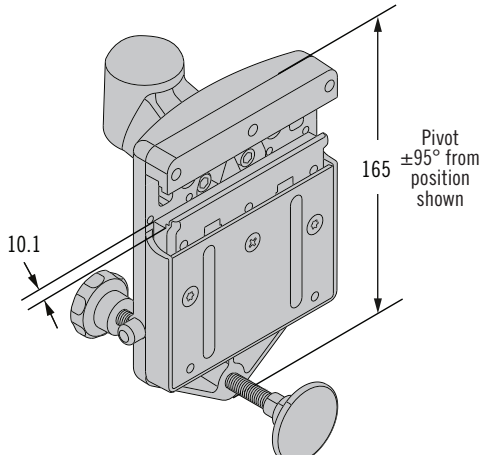

Clamp suits wall rails
8x30mm and 10x25mm

Dimensions in millimeters (inch) unless otherwise stated

Installation

1.

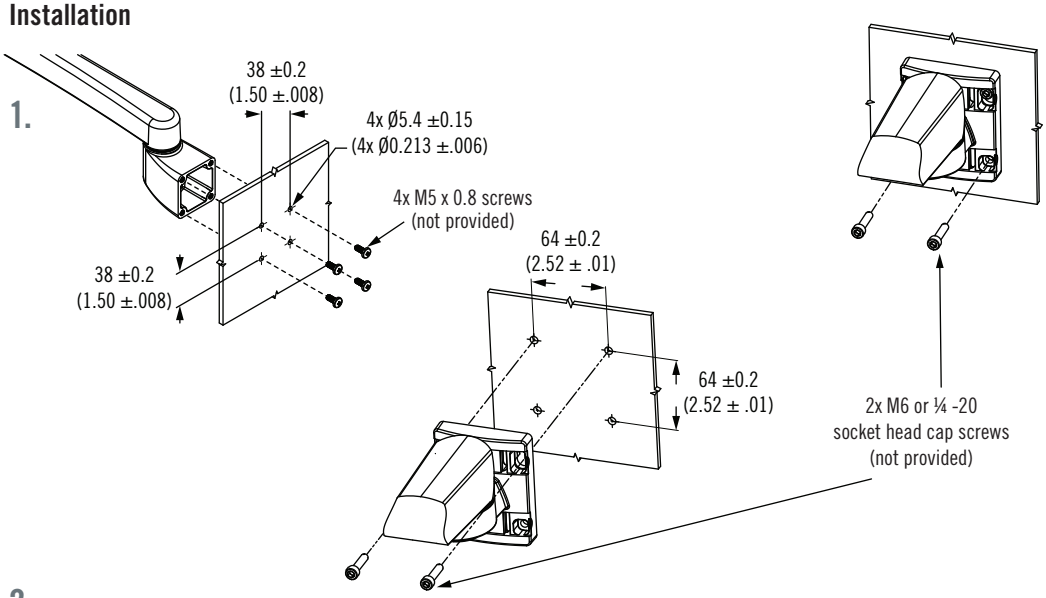

2.

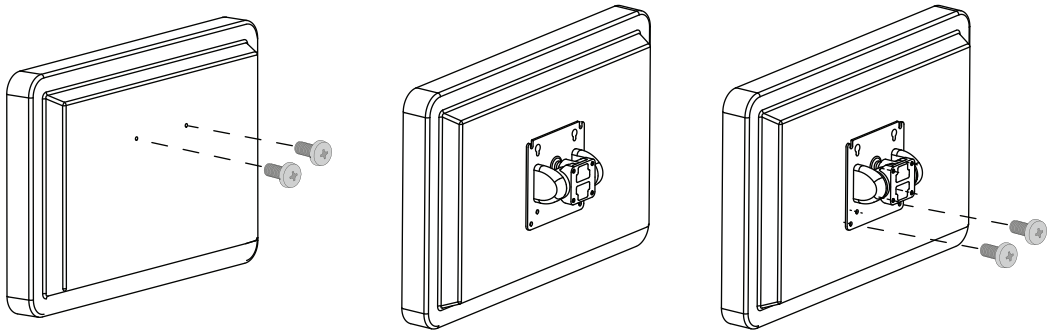

3.

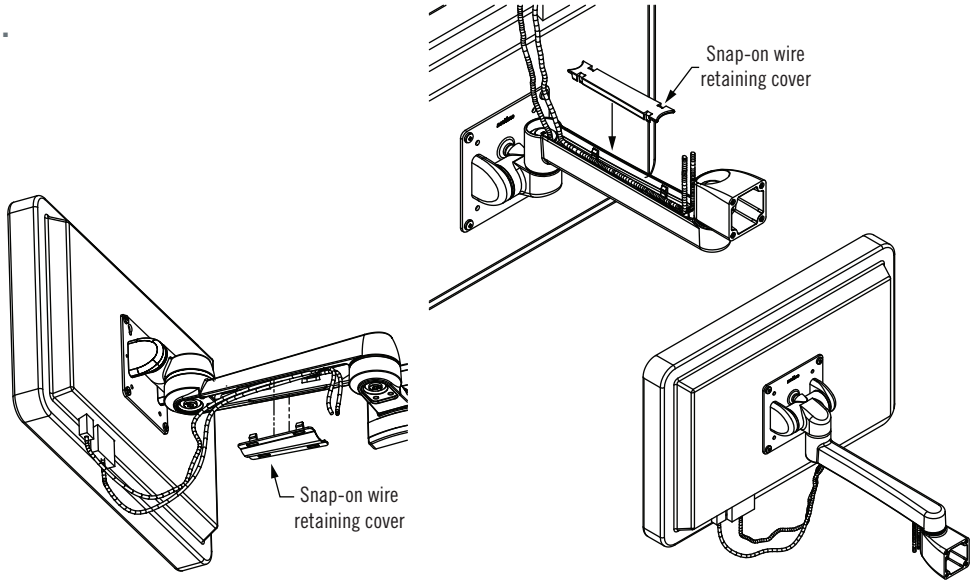

- **Mounting details**

COMPRESSION LATCHES

Quarter Turn Latches

Pages 90 - 125

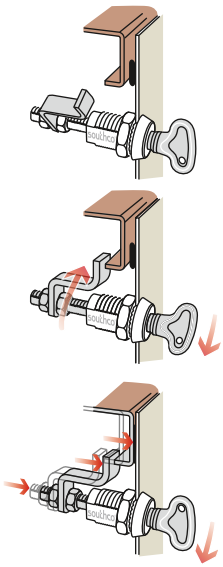

Reduce or eliminate noise and rattle, or compress gaskets for environmental sealing. A wide variety of compression latch styles include many secure key and tool access options.

An extensive line of latches built to provide both cam engagement and vibration-dampening compression with a simple turning motion. New access styles, new materials and finish options, and expended installation styles make these the most versatile compression latch solutions.

- Up to 6.4mm (.25 ") compression
- Fixed and adjustable grips
- Numerous hand, tool and key actuation styles
- Extensive range of body & installation styles
- Sealed versions to meet NEMA / IP standards

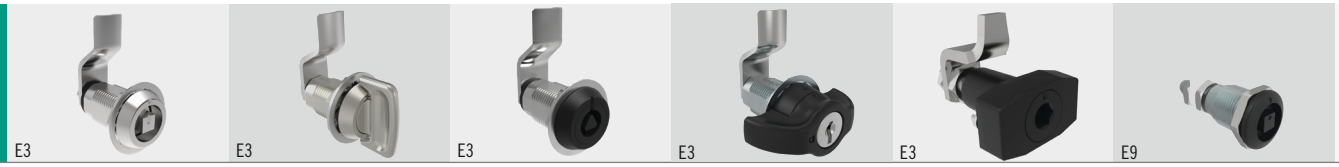

Lift and Turn

Pages 126-135

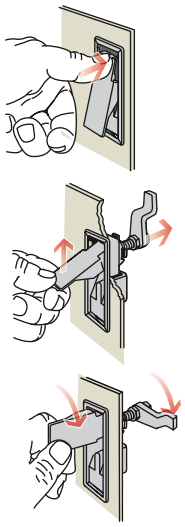

Simply lift handle to release compression, then turn handle 90˚ to open. Larger profile latches provide ample hand grip to unlatch and manipulate larger doors. Flush mounted and miniature styles for better aesthetics or where space is limited. Available in a wide range of materials and finishes.

- Convenience of latch and handle in one
- Choices of pre-set pull-up compression
- Includes stylish flush mount options

Lever

Pages 136 - 141

This compression latch family includes a wide range of low profile and flush lever latch solutions, some with push-button handle release for stylized enclosures ranging from transit storage compartments to electronics cabinetry. Also includes heavy-duty latches for compressing and prying open gasketed doors in industrial strength applications such as refrigerated storage.

- Latch and handle capability in one assembly
- Over-center models provide secure closure plus opening leverage
- Accommodates a wide range of grip dimensions
- Includes stylish flush mount options
- Sealed versions to meet NEMA / IP standards
- Several tool and key access versions

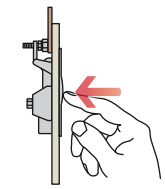

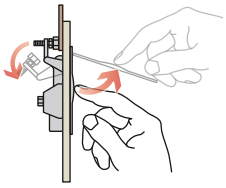

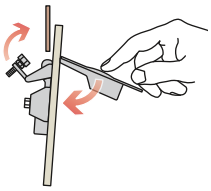

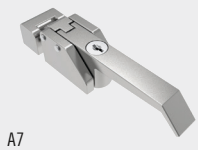
A7

C2

C5

C5

Self-Adjusting

Pages 142 - 144

Self-adjusting latches provide user-controlled compression adjustment during each actuation. They are available in a range of styles from miniature versions to larger sizes for heavier duty applications, ranging from construction equipment to industrial enclosures. They also provide some of the quickest, most economical, and easiest to access compression solutions for quietening small access doors in vibration-prone sheet metal applications ranging from HVAC equipment to fan-cooled electronics enclosures.

- User-controlled compression
- Adjusts easily for grip setting or dimensional variations in cabinets
- Numerous actuation styles
- Accommodates a wide range of grip dimensions

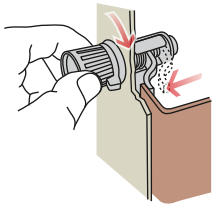

27

48

43

57

Compression Latches

Selection guide

Use this selection guide to choose the right compression latch for your application

- Key-Locking Available
- Key-Choice System
- NEMA / IP Rated
- Multi-Point Latching
- Padlockable
- Stainless Steel
- Vibration Resistant
- Fire Resistant

			MATERIAL			INSTALLATION		
		Product class	Stainless Steel	Zinc and Steel	Aluminum	Round Hole Install	Flush / Low Profile	Maximum Door Thickness
QUARTER TURN LATCHES PAGES 90-125		E3 19.1mm	✔	✔	✔	✔ Use spur washer	✔	18 (.71)
		E3 13.5mm	✔	✔			✔	13 (.50)
		E3 3 Hole		✔		✔	✔	4 (.16)
		E9 20.1mm		✔			✔	18 (.71)
LIFT AND TURN PAGES 126-135		N2	✔	✔			✔	12.7 (.50)
		62 Flush		✔			✔	6 (.25)
		62 Handle		✔				6 (.25)
		M1	✔			✔	✔	29 (1.14)
LEVER PAGES 136-141		C5 90mm		✔			✔	41 (1.61)
		C5 71mm		✔			✔	11 (.43)
		C2		✔			✔	8 (.32)
		A7		✔				Surface mount
SELF-ADJUSTING PAGES 142-144		27, 48	✔	✔			✔	4.8 (.19)
		43, 44, 14	✔	✔		✔	✔	Rear mount
		57	✔	✔		✔	✔	Rear mount

Dimensions in millimeters (inch) unless otherwise stated

PERFORMANCE						OPTIONS				
Fire EN 45545	NEMA / IP Rated	Vibration Resistant	Maximum Static Load	Compression	Grip Range	Key-Locking	Tool Access	Key-Choice System	Padlockable	Multi-Point Latching
✔	✔	✔	300 - 600 N (67 - 135 lbf)	6.4 (.25)	3.3 - 81.2 (.13 - 3.20)	✔	✔		✔	✔
✔	✔	✔	330 - 356 N (75 - 80 lbf)	4 (.17)	3.2 - 28.6 (.13 - 1.13)		✔			
		✔	450 N (100 lbf)	6.4 (.25)	7.9 - 76.2 (.31 - 3.00)	✔	✔			✔
✔	✔	✔		4 (.17)	1-74.5 (.04-2.93)		✔			✔
		✔	1000 N (225 lbf)	6 (.24)	2.5 - 104 (.10 - 4.1)	✔				
		✔	220 - 1250 N (50 - 280 lbf)	2 - 5.5 (.06 - .22)	4.5 - 111 (.17 - 4.38)	✔	✔	✔		✔
		✔	220 - 1250 N (50 - 280 lbf)	2 - 5.5 (.08 - .22)	0 - 66 (0 - 2.59)	✔	✔	✔		✔
	✔	✔	350 - 1010 N (78 - 227 lbf)	4 - 5 (.16 - .2)	10 - 88 (.39 - 3.47)	✔				✔
	✔	✔	445 N (100 lbf)	User defined	1 - 57 (.04 - 2.25)	✔	✔	✔		
		✔	170 - 290 N (40 - 65 lbf)	User defined	1 - 30 (.04 - 1.18)	✔				
	✔	✔	200 N (45 lbf)	User defined	1 - 46 (.04 - 1.81)	✔	✔	✔		
		✔	2200 N (500 lbf)	9.5 (.38)	Surface mount flush	✔				
		✔	220 N (50 lbf)	User defined	0.8 - 22.2 (.03 - .88)		✔			
		✔	330 - 670 N (75 - 150 lbf)	User defined	3.2 - 42.9 (.12 - 1.69)		✔			
		✔	13.4 - 235 N (3 - 53 lbf)	User defined	1.2 - 14.3 (.05 - .56)		✔			

E3 *VISE ACTION*® Compression Latch

Overview

Versatility and simplicity in action

Southco's VISE ACTION® Compression Latches provide mechanical advantage, ensuring tight, vibration resistant door closure to seal out water and dust, while allowing easy access with a choice of key and tool security options. The smooth operation of the VISE ACTION® design aligns the cam behind the frame and draws it up tight with a single continuous half-turn motion.

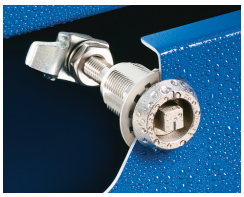

Environmental Sealing

Provides consistent compression to seal out water and dust

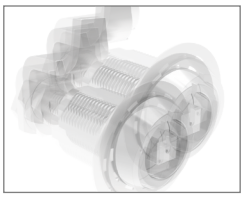

Vibration Resistant

Helps reduce or eliminate noise and rattles caused by vibration

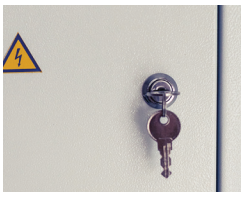

Secure Access

Many tool and key access styles restrict access and discourage vandalism

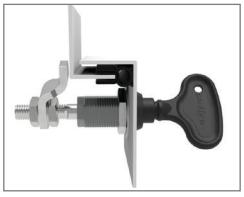

Simple Operation

Continuous half-turn motion aligns the cam and pulls the latch tight

User Friendly

Easy-to-grip knob and handle-actuated styles for quick, simple access

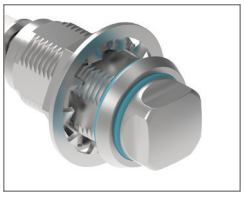

Customizable

Variety of shapes and sizes to accommodate different door/panel thickness

Dimensions in millimeters (inch) unless otherwise stated

Technical Specifications

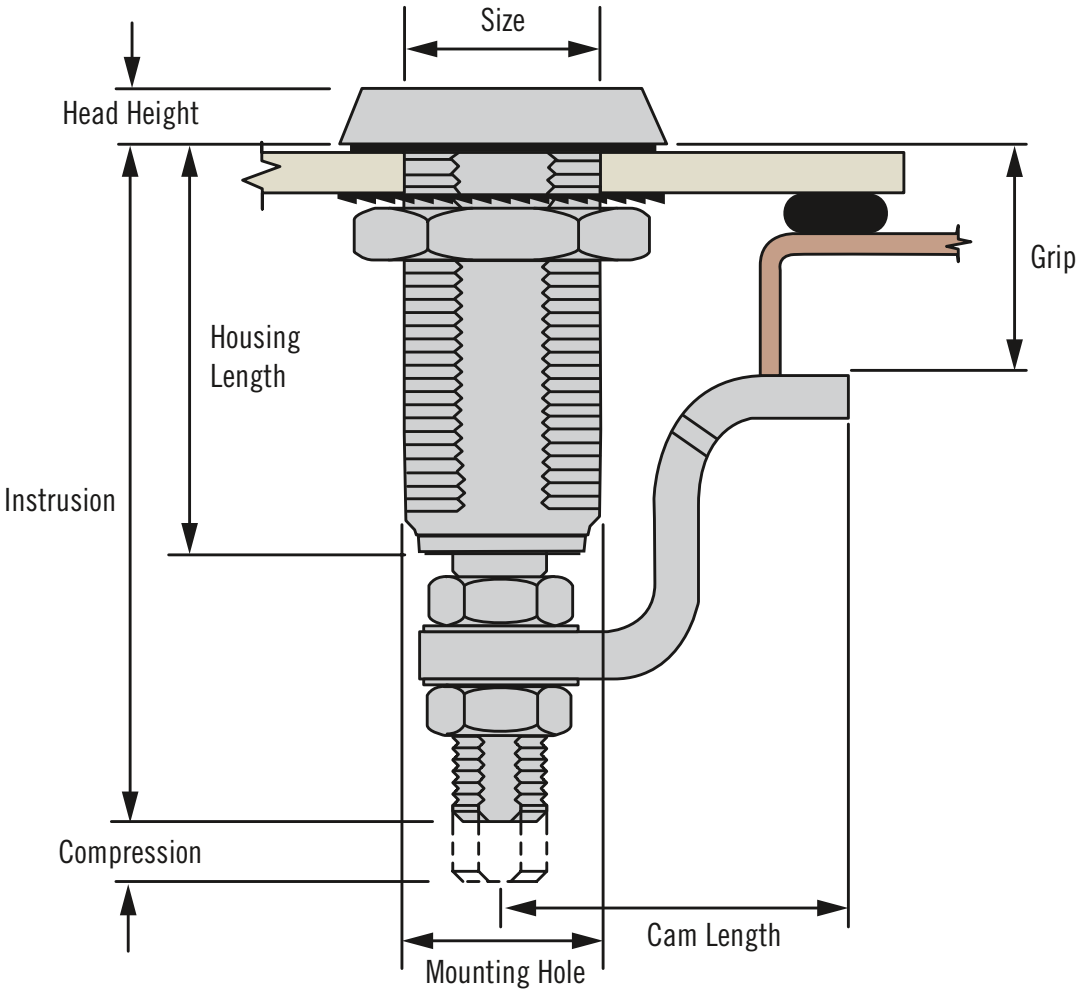

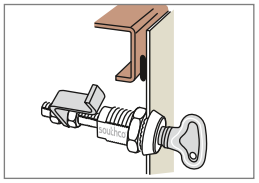

First 90⁰ turn:
Cam rotates behind frame

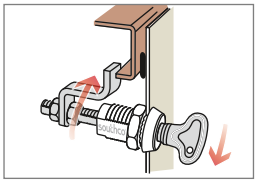

*The door is now **latched** against opening*

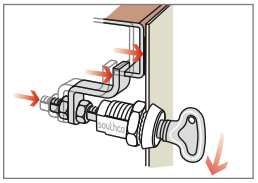

Completing the half-turn motion, the shaft and cam compress to pull the door against the frame

Available Options

Material
Zinc, stainless steel, aluminum

Finish
Powder coating, chrome plating, anodizing, passivation, electropolishing

Grips
Fixed, adjustable

Size
Small (13.5mm mounting hole), large (19.1mm mounting hole)

Rotation
Turn clockwise to latch, turn counter-clockwise to latch

Access Restriction
None, tool, key locking, padlockable

Compliance Specifications
NEMA4, IP65/69K, UL, EN 44545-3, DIN EN 1672-2, DIN EN61373

E3 *VISE ACTION*® Compression Latch

Zinc housing · Tool or hand operated
Fixed or adjustable grip · 19.1mm size

- **Consistent pre-set compression**
- **Tool operated for security**
- **EN 45545-3 E10 Compliant**

Material and Finish

Zinc alloy, powder coated or chrome plated and steel, zinc plated

Performance Details

Compression: 6.4 mm (.25 in)
Maximum static load:
Adjustable Grip: 450 N (100 lbf)
Fixed Grip: 300 N (67lbf)

Sealing Notes

NEMA 4 and IP65 enabled by using optional flange gasket (part number E5-17)

Installation Notes

Recommended tightening torque for the mounting nut is 20 N·m (176 in·lbf)
Adjustable Grip: Position cam so latching function can be achieved comfortably by hand.
Fixed Grip: Mounting screw torque 10 N·m (88 in·lbf)

Keys and Accessories

See pages 118-121

FIXED GRIP

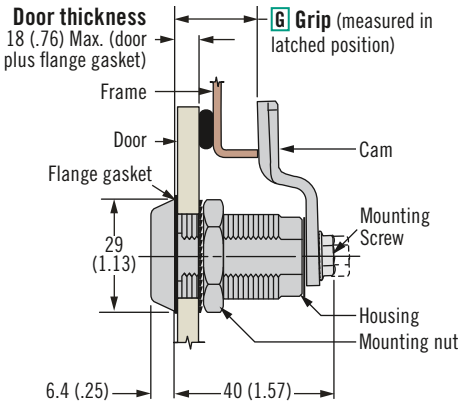

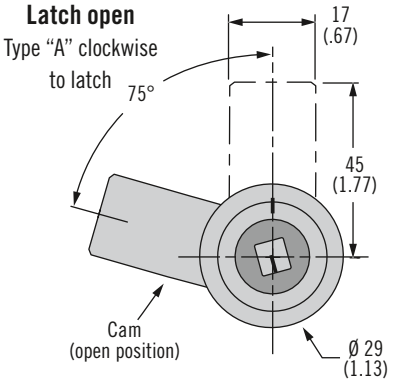

ADJUSTABLE GRIP

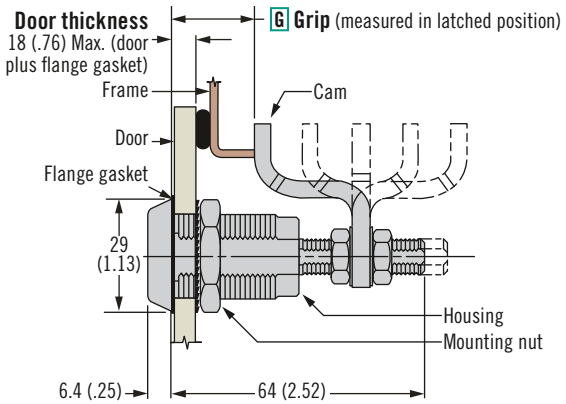

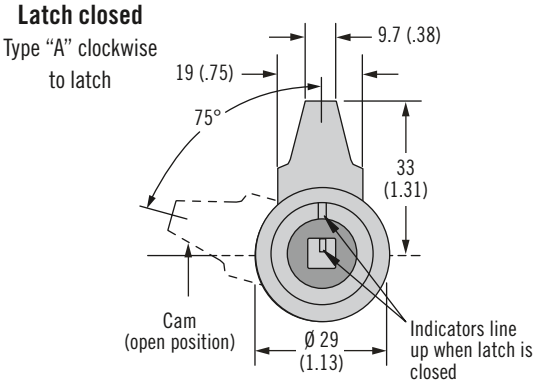

ACTUAL SIZE

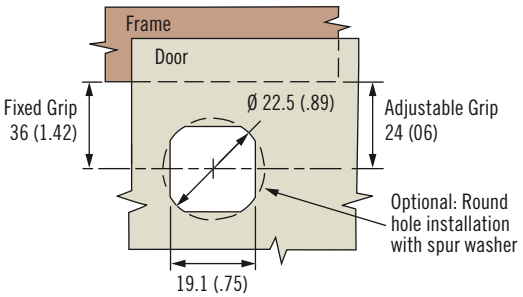

Railway Standard - Bellcore 216

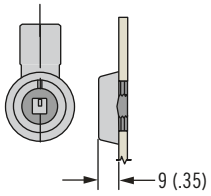

Other tool head styles
(Slotted recess shown)

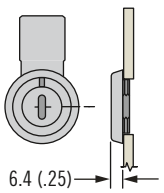

T-Handle Style

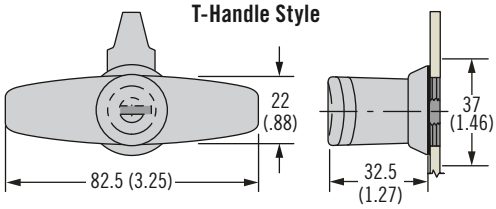

Knob Style

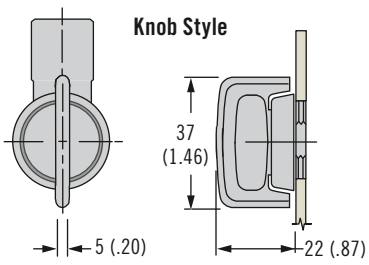

Wing Knob Style
Lock core (shown in unlocked position

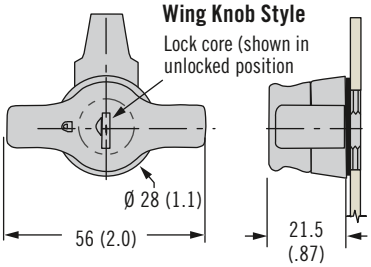

Dimensions in millimeters (inch) unless otherwise stated

Latch Installation Method

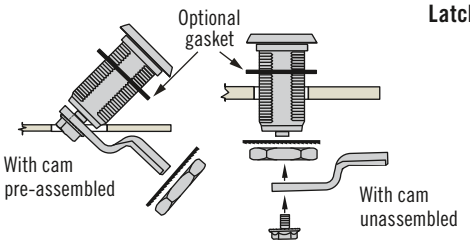

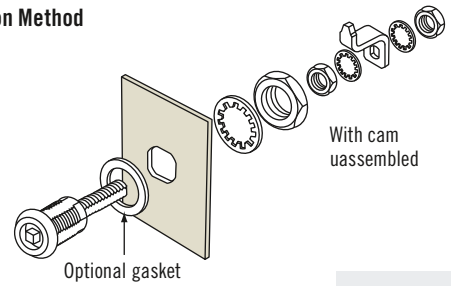

Part Number Selection

E3 - R H - G F

F Finish

1 Chrome plated
5 Black powder coated
7 Silver powder coated

H Head Styles

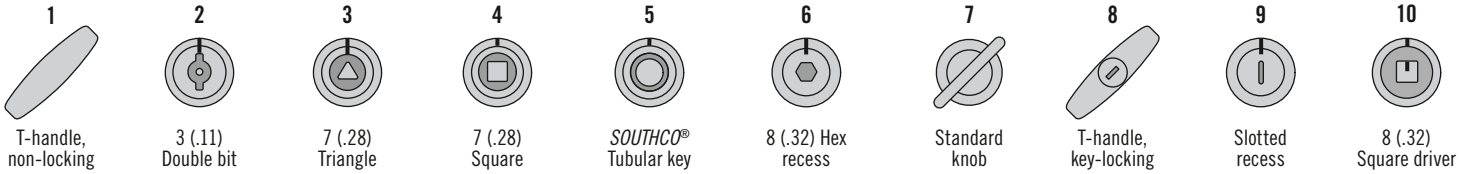

FIXED GRIP

R Rotation

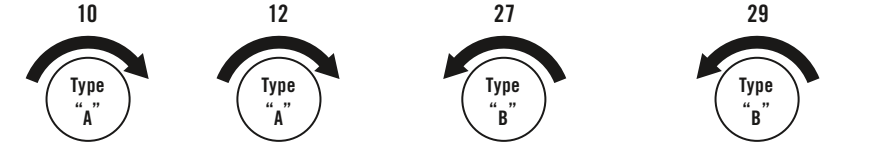

G Grip Table

Total Grip	G	Maximum Door Thickness with Cam Preassembled
15 (.59)	00	Use unassembled
17 (.67)	01	Use unassembled
19 (.75)	02	1 (.04)
21 (.83)	03	2 (.08)
23 (.91)	04	4 (.16)
25 (.98)	05	5 (.20)
27 (1.06)	06	6 (.24)
29 (1.14)	07	7 (.28)
31 (1.22)	08	
33 (1.30)	09	

Total Grip	G	Maximum Door Thickness with Cam Preassembled
35 (1.38)	10	7 (.28)
37 (1.46)	11	
39 (1.53)	12	
41 (1.61)	13	
43 (1.69)	14	
45 (1.77)	15	7 (.28)
47 (1.85)	16	
49 (1.93)	17	
51 (2.01)	18	
53 (2.09)	19	

For Fixed Grip, if your grip is between two options choose the smaller grip

ADJUSTABLE GRIP

R Rotation

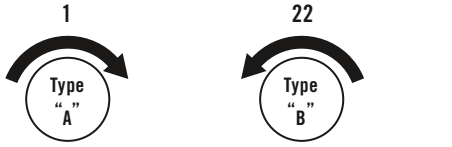

G Grip Table

G Grip	Minimum	Maximum	Cam Type
1	11.4 (.45)	27.2 (1.07)	Deep offset cam, forward
	66.3 (2.61)	76.2 (3.00)	Deep offset cam, reversed
2	25.4 (1)	41.1 (1.62)	Offset cam, forward
	52.6 (2.07)	68.3 (2.69)	Offset cam, reversed
3	38.9 (1.53)	54.6 (2.15)	Straight cam

Dimensions in millimeters (inch) unless otherwise stated

E3 *VISE ACTION*® Compression Latch

Zinc housing · Tool operated
Compact · Fixed or adjustable grip · 19.1mm size

- **Minimal panel intrusion**
- **Consistent pre-set compression**
- **Tool operated for security**
- **EN 45545-3 E10 Compliant**

Material and Finish

Zinc alloy, powder coated or chrome plated and steel, zinc plated

Performance Details

Compression: 6.4 mm (.25 in)
Maximum static load:
Adjustable Grip: 450N (100 lbf)
Fixed Grip: 300N (67lbf)

Sealing Notes

NEMA 4 and IP65 enabled by using supplied flange gasket

Installation Notes

Recommended tightening torque for the mounting nut is 20 N·m (176 in·lbf)
Adjustable Grip: Position cam so latching function can be achieved comfortably by hand.
Fixed Grip: Mounting screw torque 10 N·m (88 in·lbf)

Keys and Accessories

See pages 118-121

FIXED GRIP

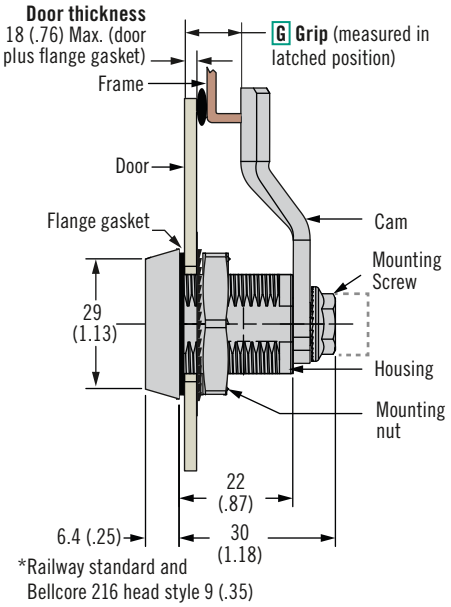

ADJUSTABLE GRIP

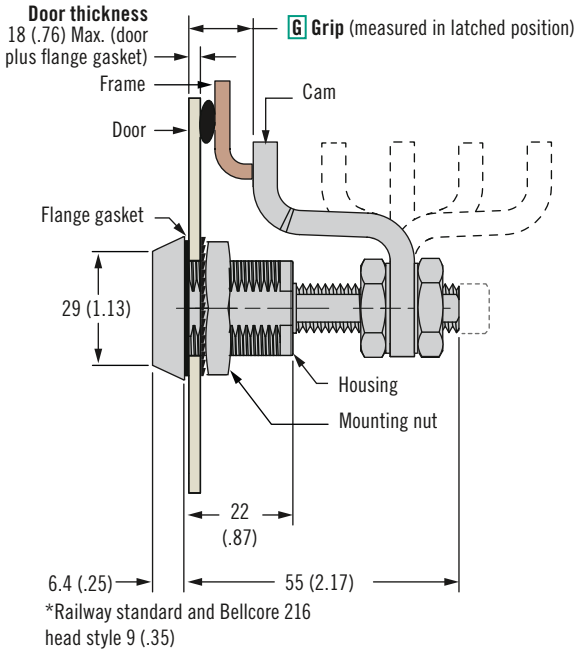

Latch open

Type "A" clockwise to latch

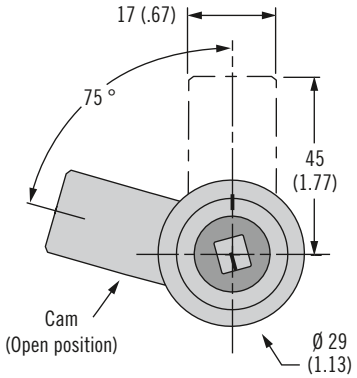

Latch closed

Type "A" clockwise to latch

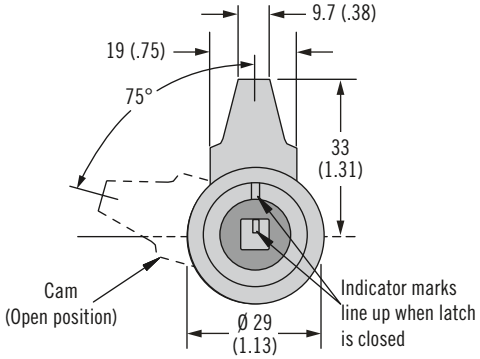

ACTUAL SIZE

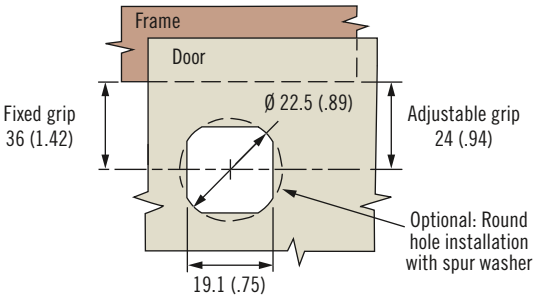

Dimensions in millimeters (inch) unless otherwise stated

southco®

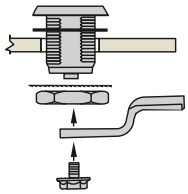

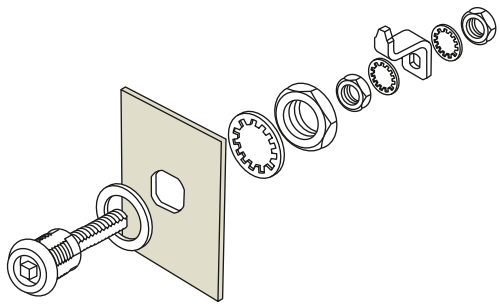

Part Number Selection

FIXED GRIP

E3 - C R H - UU F

ADJUSTABLE GRIP

E3 - C R H - 0 F

F Finish

1 Chrome plated
5 Black powder coated
7 Silver powder coated

H Head Styles

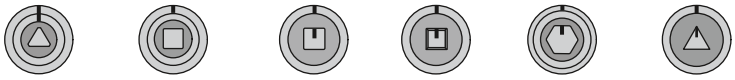

3 — 7 (.28) Triangle
4 — 7 (.28) Square
10 — 8 (.32) Square driver
11 — Railway standard
15 — Bellcore 216
20 — 8 (.32) Triangle

R Rotation

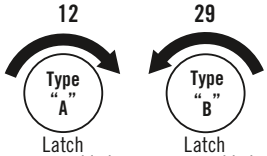

12 — Latch unassembled
29 — Latch unassembled

R Rotation

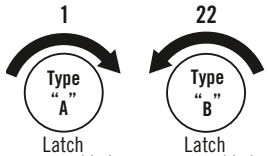

1 — Latch unassembled
22 — Latch unassembled

Rotation Option

Type A: Turn clockwise to latch
Type B: Turn counter-clockwise to latch

Cam Part Number (order separately from latch)			
Grip	**Part Number**	**Grip**	**Part Number**
4 (.16)	E5-2500	24 (.94)	E5-2510
6 (.24)	E5-2501	26 (1.02)	E5-2511
8 (.31)	E5-2502	28 (1.10)	E5-2512
10 (.39)	E5-2503	30 (1.18)	E5-2513
12 (.47)	E5-2504	32 (1.26)	E5-2514
14 (.55)	E5-2505	34 (1.34)	E5-2515
16 (.63)	E5-2506	36 (1.42)	E5-2516
18 (.71)	E5-2507	38 (1.50)	E5-2517
20 (.79)	E5-2508	40 (1.57)	E5-2518
22 (.87)	E5-2509	42 (1.65)	E5-2519

Minimum Grip	Maximum Grip	Cam Type	Part Number
3.3 (.13)	14.7 (.58)	Deep offset cam, forward	E3-28-201-12
56.6 (2.23)	66.6 (2.62)	Deep offset cam, reversed	
14.6 (.57)	30.3 (1.19)	Offset cam, forward	E3-28-202-12
42 (1.65)	57.7 (2.27)	Offset cam, reversed	
28.2 (1.13)	44.5 (1.75)	Straight cam	E3-28-203-12

See table

Order latch and cam separately.

Select grip from Cam table if your grip is between two options choose the smaller grip

Dimensions in millimeters (inch) unless otherwise stated

E3 *VISE ACTION*® Compression Latch

Zinc housing · Tool or hand operated
Adjustable grip · 13.5mm size

- **Reduced dimensions**
- **Consistent pre-set compression**
- **Easy grip adjustment**
- **Tool operated for security**
- **EN 45545-3 E10 Compliant**

Material and Finish
Zinc alloy, powder coated or chrome plated and steel, zinc plated

Performance Details
Compression: 4 mm (.17 in)
Maximum static load: 330 N (75 lbf)

Sealing Notes
NEMA 4 and IP65 enabled by using optional flange gasket (part number E3-0-30268-02)

Installation Notes
Recommended tightening torque for the mounting nut is
20 N·m (176 in·lbf)
Position cam so latching function can be achieved comfortably by hand.

Keys & Accessories
See pages 118-121

Part Number Selection
See table

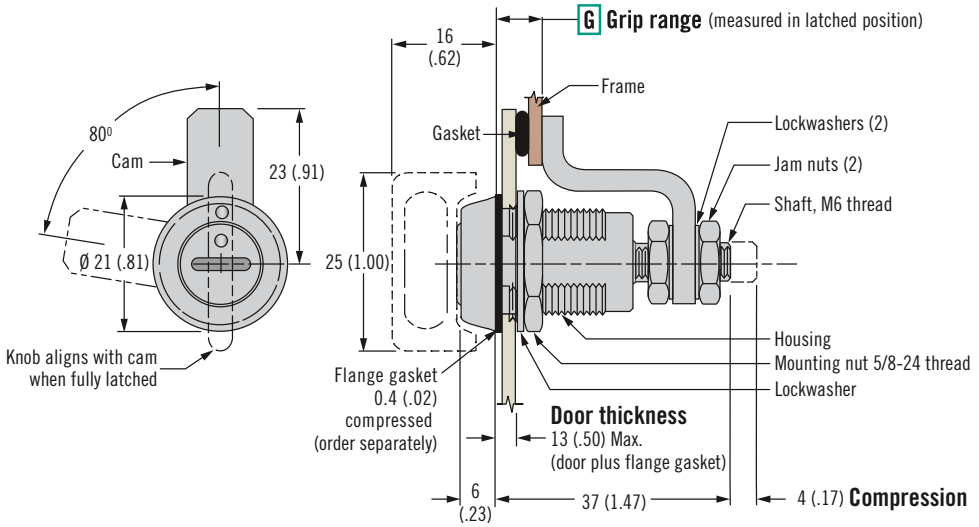

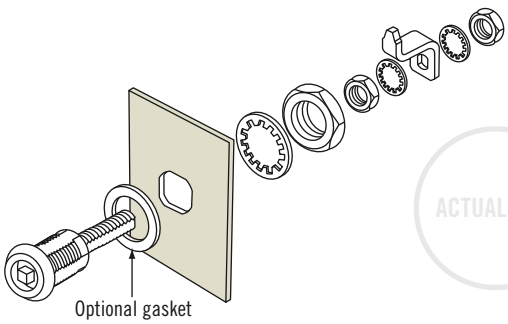

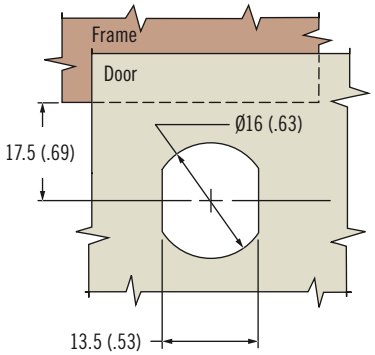

E3 - R H - G F

R Rotation

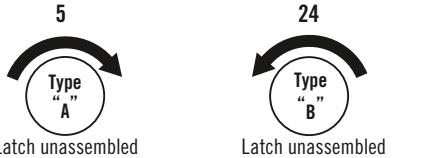

H Head Styles

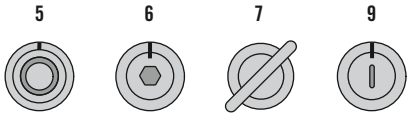

F Finish
1 Chrome plated
5 Black powder coated
7 Silver powder coated

G Grip	Minimum	Maximum
1	3.2 (.13)	6.4 (.25)
2	6.4 (.25)	9.5 (.37)
3	9.5 (.37)	12.7 (.50)
4	12.7 (.50)	15.9 (.63)
5	15.9 (.63)	19 (.75)
6	19 (.75)	22.2 (.87)
7	22.2 (.87)	25.4 (1)
8	25.4 (1)	28.6 (1.13)

Dimensions in millimeters (inch) unless otherwise stated

E3 *VISE ACTION*® Compression Latch

Zinc housing · Tool or hand operated
Three hole mount · Adjustable grip · 19.1mm size

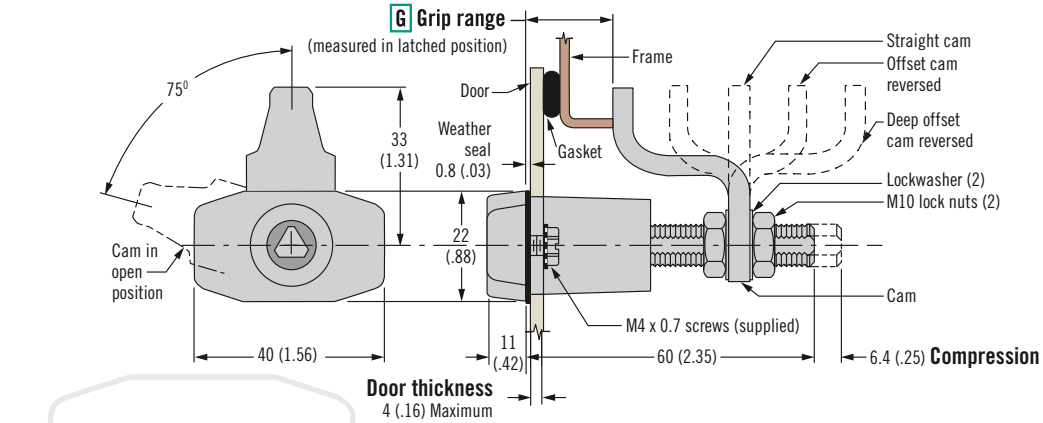

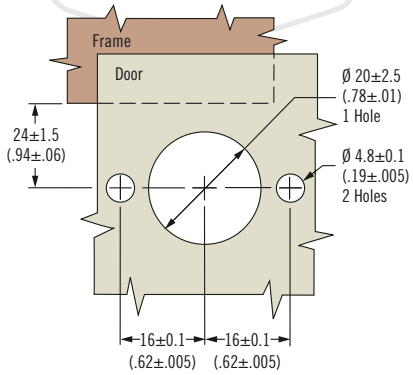

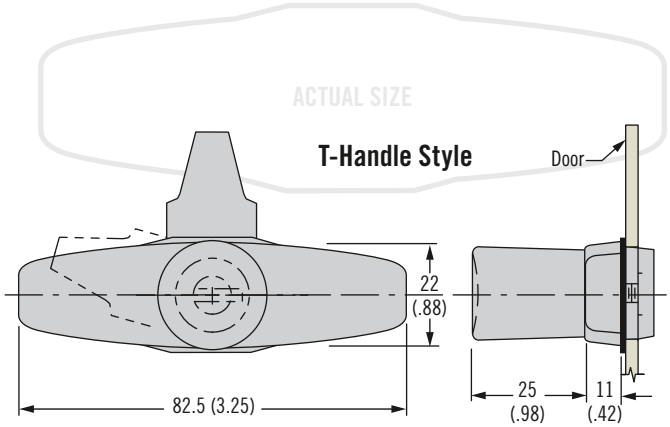

- **For thick panel or soft material**
- **Consistent pre-set compression**
- **Easy grip adjustment**
- **Simplified round hole prep**
- **Tool operated for security**

Material and Finish

Zinc alloy, powder coated or chrome plated and steel, zinc plated

Performance Details

Compression: 6.4 mm (.25 in)
Maximum static load:
450 N (100 lbf)

Installation Notes

For door thickness greater than 4 (.16) calculate screw length using the following formula:
Door thickness + 6 (.24)

Keys and Accessories

See pages 118-121

Part Number Selection

E3 - R H - G F

H Head Styles

1	2	3	4	5	6	8
T-handle, non-locking	3 (.11) Double bit	7 (.28) Triangle	7 (.28) Square	*SOUTHCO*® Tubular key	8 (.32) Hex recess	T-handle, key-locking

R Rotation

3 — Type "A"

Latch unassembled
Turn clockwise to latch

G Grip	Minimum	Maximum	Cam Type
1	7.9 (.31)	23.6 (.93)	Deep offset cam, forward
	62.7 (2.47)	76.2 (3.00)	Deep offset cam, reversed
2	21.8 (.86)	37.3 (1.47)	Offset cam, forward
	49 (1.93)	64.8 (2.55)	Offset cam, reversed
3	35.3 (1.39)	50.8 (2.00)	Straight cam

F Finish

1 Chrome plated
5 Black powder coated
7 Silver powder coated

E3 *VISE ACTION*® Compression Latch

Zinc housing · Tool operated
Flush · Fixed grip · 19.1mm size

- **Completely flush outer surface**
- **Consistent pre-set compression**
- **Designed for thicker panels such as wood**
- **Tool operated for security**

Material and Finish

Zinc alloy, powder coated or chrome plated and steel, zinc plated

Performance Details

Compression: 6.4 mm (.25 in)
Maximum static load: 300 N (67 lbf)

Installation Notes

1. Insert the latch through the rear of the door. Place the mounting washer then the mounting nut onto the latch.
2. Adjust mounting nut so that the head of the latch is flush with the outside of the door. The holes in the washer and the nut must be aligned. The latch must be aligned to the latching position. Southco recommends using a minimum of three mounting screws in a pattern shown. Recommended tightening torque for pawl mounting screw is 10 N·m (88.5 in·lbf).

Keys & Accessories

See pages 118-121

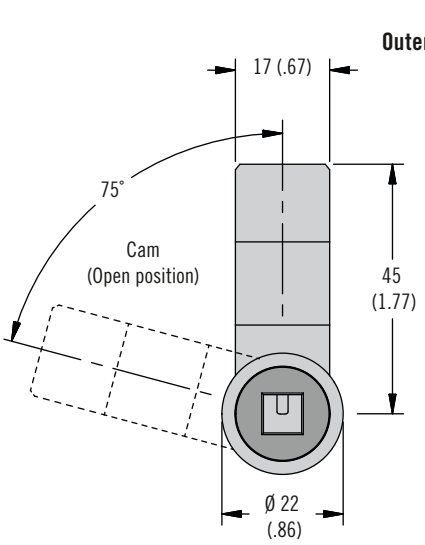

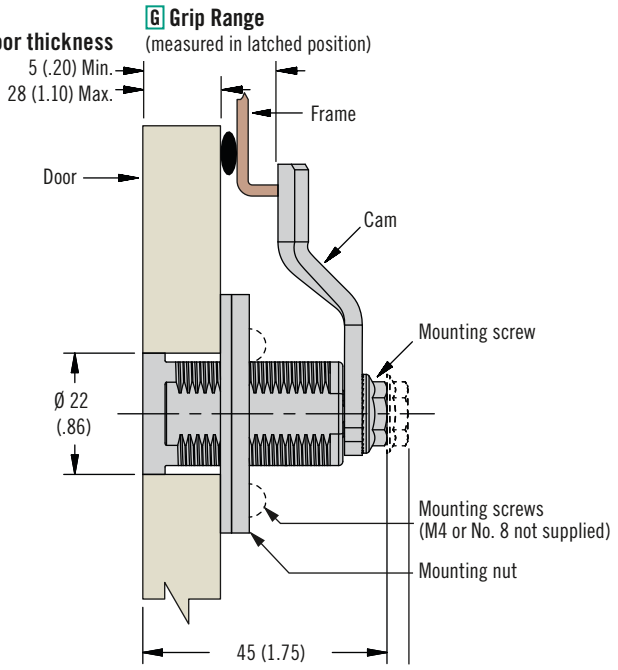

Cam Detail

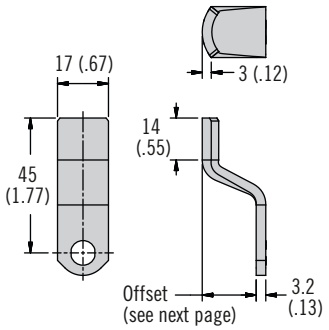

Mounting Washer

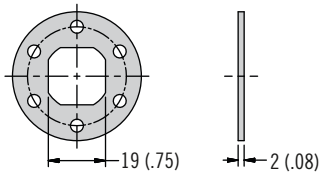

Mounting Nut

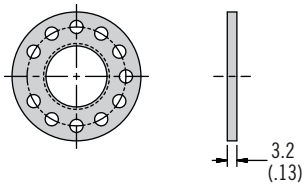

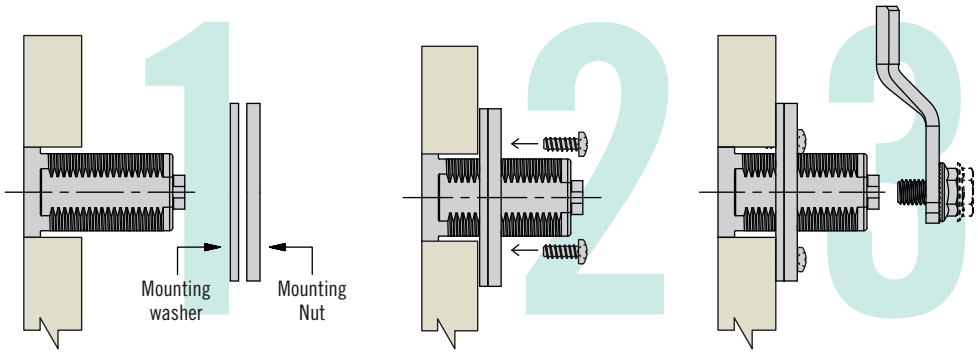

Dimensions in millimeters (inch) unless otherwise stated

southco®

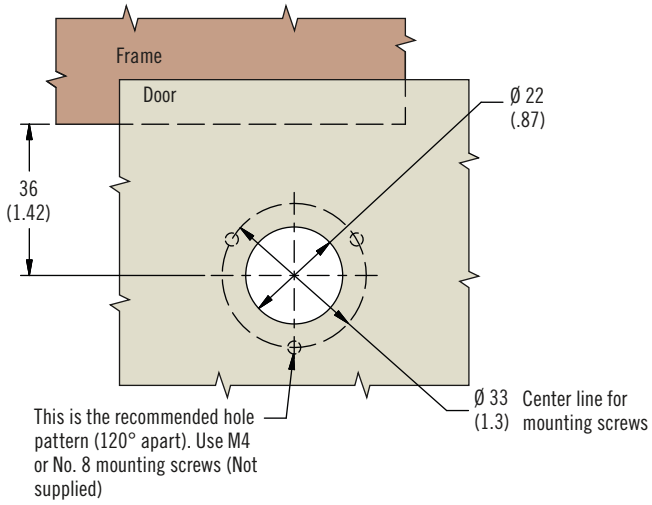

ACTUAL SIZE

H Head Styles

3	4	6	10	11	18	20
7 (.28) Triangle	7 (.28) Square	8 (.32) Hex recess	8 (.32) Square driver	Railway standard	10 (.37) Hex	8 (.32) Triangle

E3 - 14 H - G F

F Finish

- **1** Chrome plated
- **5** Black powder coated
- **7** Silver powder coated

G Grip			
Total Grip	**G**	**Total Grip**	**G**
19 (.75)	00	39 (1.53)	10
21 (.83)	01	41 (1.61)	11
23 (.91)	02	43 (1.69)	12
25 (.98)	03	45 (1.77)	13
27 (1.06)	04	47 (1.85)	14
29 (1.14)	05	49 (1.93)	15
31 (1.30)	06	51 (2.01)	16
33 (1.30)	07	53 (2.09)	17
35 (1.38)	08	55 (2.17)	18
37 (1.46)	09	57 (2.24)	19

Part Number Selection

See table

Select grip from table. If your grip is between two options choose the smaller grip

Latches are individually packaged. For layer packaged latches (50 pieces minimum, sold in multiples of 50) add -13 to the part number. Example: E3-1410-XX1-13

*10 (.375) Hex key not available from Southco

E3 *VISE ACTION*® Compression Latch

Stainless steel housing · Tool operated
Fixed or adjustable grip · 19.1mm size

- **Consistent pre-set compression**
- **Premium finish**
- **Corrosion resistance**
- **Tool operated for security**
- **EN 45545-3 E60 Compliant**

Material and Finish
Stainless steel 304 and 316

Performance Details
Compression: 6.4 mm (.25 in)
Maximum static load:
Adjustable Grip: 600 N (136 lbf)
Fixed Grip: 450 N (100 lbf)

Sealing Notes
NEMA 4 and IP65 enabled by using supplied flange gasket

Installation Notes
Recommended tightening torque for the mounting nut is
20 N·m (176 in·lbf)
Adjustable Grip: Position cam so latching function can be achieved comfortably by hand.
Fixed Grip: Mounting screw torque 10 N·m (88 in·lbf)

Keys and Accessories
See pages 118-121

FIXED GRIP

Door thickness
18 (.71), latch unassembled.
(door plus flange gasket)

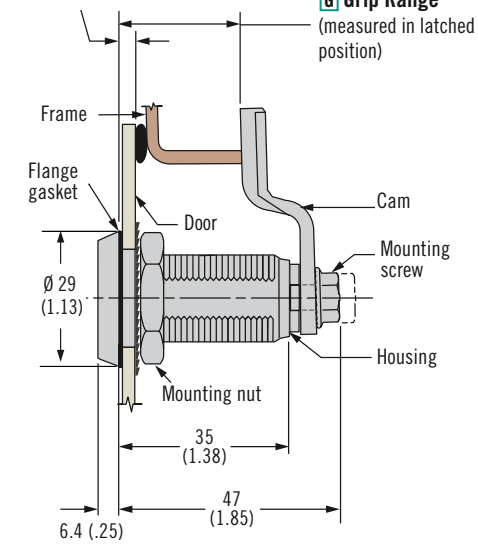

Latch open
Type "A" clockwise to latch

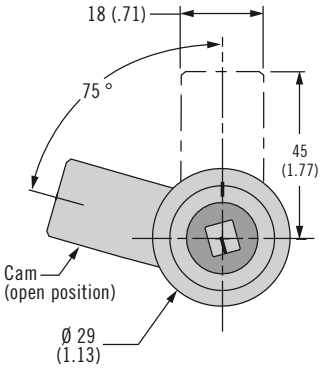

ADJUSTABLE GRIP

Door thickness
18 (.71), latch unassembled.
(door plus flange gasket)

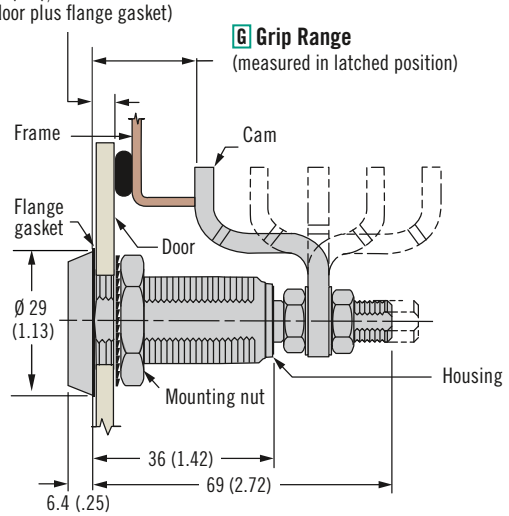

Latch closed
Type "A" clockwise to latch

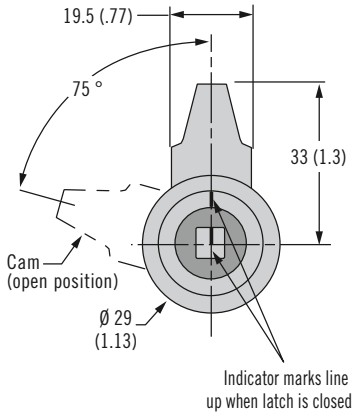

ACTUAL SIZE

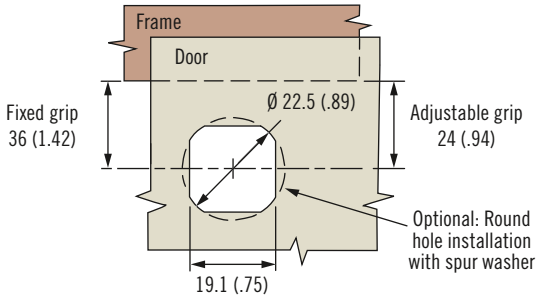

Dimensions in millimeters (inch) unless otherwise stated

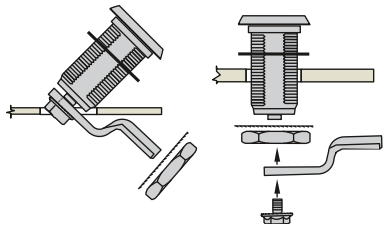

Assembled Installation

Unassembled Installation

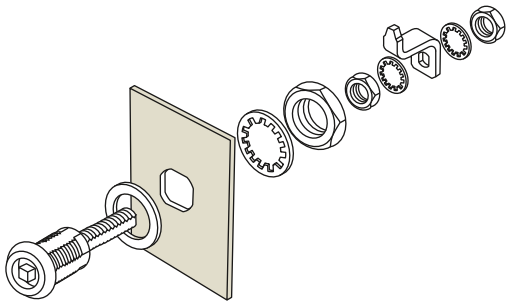

Part Number Selection

E3 - R H - G 0

H Head Styles

2	3	4	5	6	9	10	11	15
3 (.11) Double bit	7 (.28) Triangle	7 (.28) Square	*SOUTHCO*® Tubular key	8 (.32) Hex recess	Slotted recess	8 (.32) Square driver	Railway standard	Bellcore 216

FIXED GRIP

R Rotation

10	12	27	29
Type "A"	Type "A"	Type "B"	Type "B"
Latch assembled Turn clockwise to latch	Latch unassembled Turn clockwise to latch	Latch assembled Turn counter-clockwise to latch	Latch unassembled Turn counter-clockwise to latch

G Grip Table

Total Grip	G	Max. Door Thickness for Assembled Latch	Total Grip	G	Max. Door Thickness for Assembled Latch
20 (.79)	00	1 (.04)	40 (1.57)	10	7 (.28)
22 (.87)	01	2 (.08)	42 (1.65)	11	
24 (.94)	02	4 (.16)	44 (1.73)	12	
26 (1.02)	03	5 (.20)	46 (1.81)	13	
28 (1.10)	04	6 (.24)	48 (1.89)	14	
30 (1.18)	05	7 (.28)	50 (1.97)	15	
32 (1.26)	06		52 (2.05)	16	
34 (1.34)	07		54 (2.13)	17	
36 (1.42)	08		56 (2.20)	18	
38 (1.50)	09		58 (2.28)	19	

For Fixed Grip, if your grip is between two options choose the smaller grip

ADJUSTABLE GRIP

R Rotation

1	22
Type "A"	Type "B"
Latch unassembled Turn clockwise to latch	Latch unassembled Turn counter-clockwise to latch

G Grip	Minimum	Maximum	Cam Type
1	16.4 (.64)	32.2 (1.26)	Deep offset cam, forward
	71.3 (2.80)	81.2 (3.19)	Deep offset cam, reversed
2	30.4 (1.19)	46.1 (1.81)	Offset cam, forward
	57.6 (2.26)	73.3 (2.88)	Offset cam, reversed
3	43.9 (1.72)	59.6 (2.34)	Straight cam

Dimensions in millimeters (inch) unless otherwise stated

E3 *VISE ACTION*® Compression Latch

Stainless steel housing · Tool operated
Compact · Fixed or adjustable grip · 19.1mm size

- **Minimal panel intrusion**
- **Consistent pre-set compression**
- **Premium finish**
- **Corrosion resistance**
- **Tool operated for security**
- **EN 45545-3 E60 Compliant**

Material and Finish
Stainless steel 304 and 316

Performance Details
Compression: 6.4 mm (.25 in)
Maximum static load:
Adjustable Grip: 600 N (136 lbf)
Fixed Grip: 450 N (100 lbf)

Sealing Notes
NEMA 4 and IP65 enabled by using supplied flange gasket

Installation Notes
Recommended tightening torque for the mounting nut is
20 N·m (176 in·lbf)
Adjustable Grip: Position cam so latching function can be achieved comfortably by hand.
Fixed Grip: Mounting screw torque 10 N·m (88 in·lbf)

Keys and Accessories
See pages 118-121

FIXED GRIP

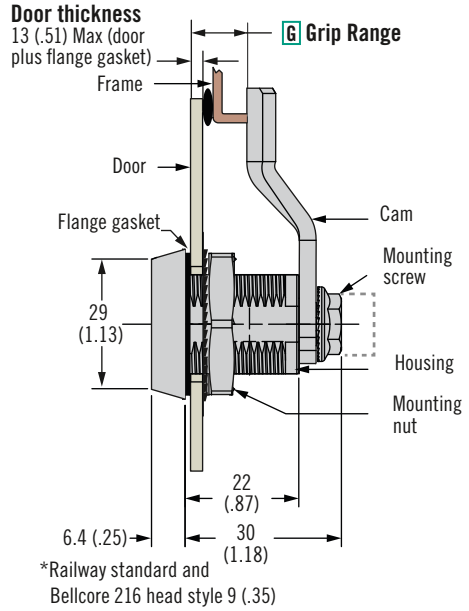

ADJUSTABLE GRIP

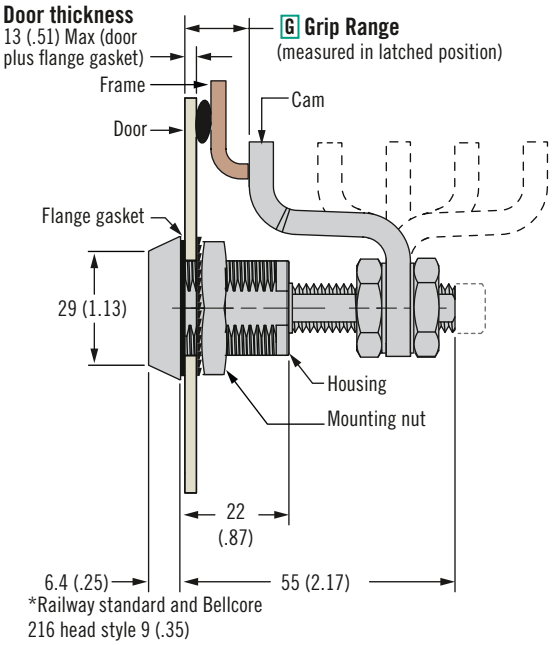

Latch open
Type "A" clockwise to latch

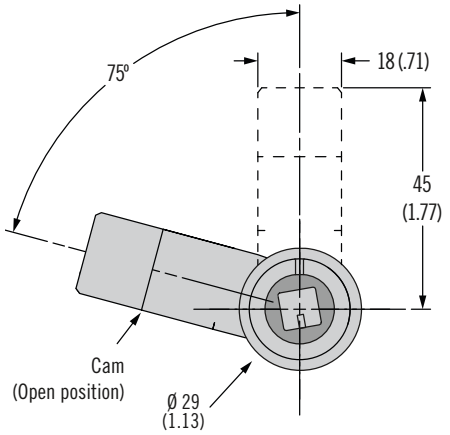

Latch closed
Type "A" clockwise to latch

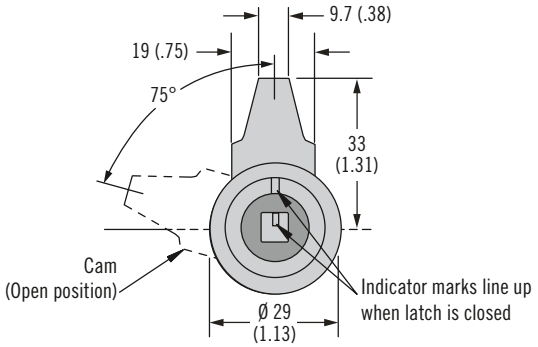

ACTUAL SIZE

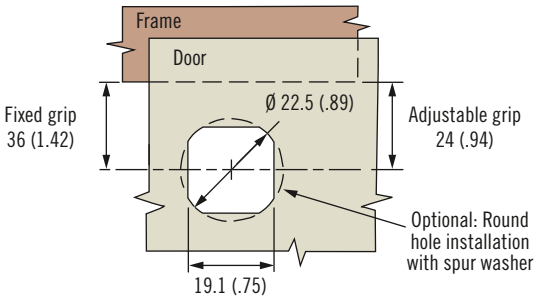

Dimensions in millimeters (inch) unless otherwise stated

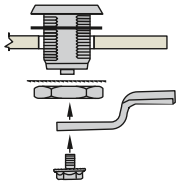

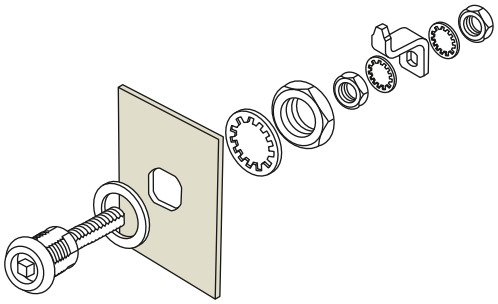

FIXED GRIP

E3 - C R H - UU0

ADJUSTABLE GRIP

E3 - C R H - 00

H Head Styles

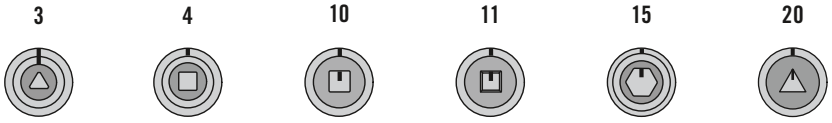

R Rotation

Cam Part Number (order separately from latch)			
Grip	Part Number	Grip	Part Number
4 (.16)	E3-28-700-24	24 (.94)	E3-28-710-24
6 (.24)	E3-28-701-24	26 (1.02)	E3-28-711-24
8 (.31)	E3-28-702-24	28 (1.10)	E3-28-712-24
10 (.39)	E3-28-703-24	30 (1.18)	E3-28-713-24
12 (.47)	E3-28-704-24	32 (1.26)	E3-28-714-24
14 (.55)	E3-28-705-24	34 (1.34)	E3-28-715-24
16 (.63)	E3-28-706-24	36 (1.42)	E3-28-716-24
18 (.71)	E3-28-707-24	38 (1.50)	E3-28-717-24
20 (.79)	E3-28-708-24	40 (1.57)	E3-28-718-24
22 (.87)	E3-28-709-24	42 (1.65)	E3-28-719-24

R Rotation

Cam Part Number Table (order separately from latch)			
Minimum Grip	Maximum Grip	Cam Type	Part Number
3.3 (.13)	14.7 (.58)	Deep offset cam, forward	E3-28-201-24
56.6 (2.23)	66.5 (2.62)	Deep offset cam, reversed	
14.6 (.57)	30.3 (1.19)	Offset cam, forward	E3-28-202-24
42 (1.65)	57.7 (2.27)	Offset cam, reversed	
28.2 (1.13)	44.5 (1.75)	Straight cam	E3-28-203-24

Part Number Selection

See table

Order latch and cam separately.

Select grip from Cam table if your grip is between two options choose the smaller grip

E3 *VISE ACTION*® Compression Latch

Stainless steel housing · Tool operated
High-pressure sealed · Fixed or adjustable grip · 19.1mm size

- **Consistent pre-set compression**
- **Premium finish**
- **Corrosion resistance**
- **IP69K Compliant**
- **Easy clean**
- **Conform to DIN EN 1672-2**
- **Tool operated for security**
- **EN 45545-3 E60 Compliant**

Material and Finish
Stainless Steel 316

Performance Details
Compression: 6.4 mm (.25 in)
Maximum static load:
Adjustable Grip: 600 N (136 lbf)
Fixed Grip: 450 N (100 lbf)

Keys
Use Southco key E3-17-1 only

Installation Notes
Recommended tightening torque for the mounting nut is
20 N·m (176 in·lbf)

Accessories
Replacement flange gasket:
Part number: E5-17-101

FIXED GRIP

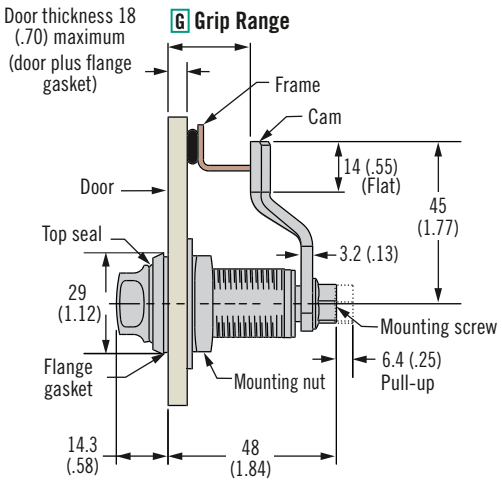

ADJUSTABLE GRIP

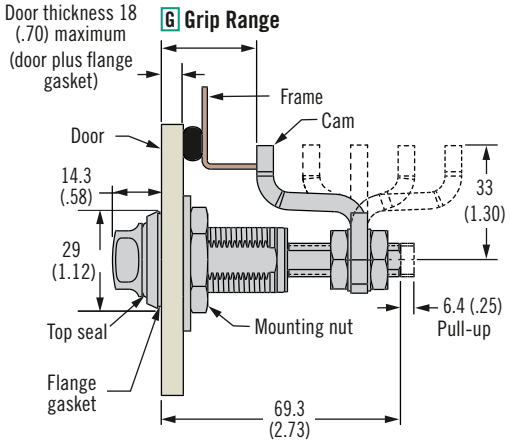

Latch Open
Type "A" clockwise to latch

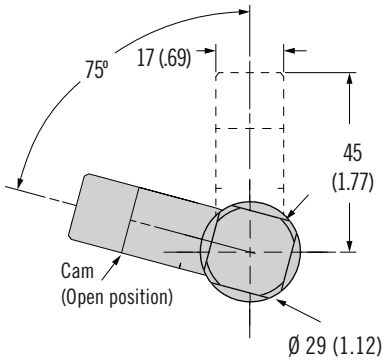

Latch Closed
Type "A" clockwise to latch

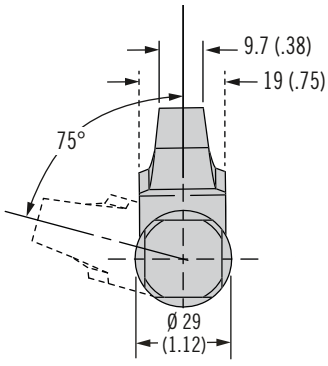

ACTUAL SIZE

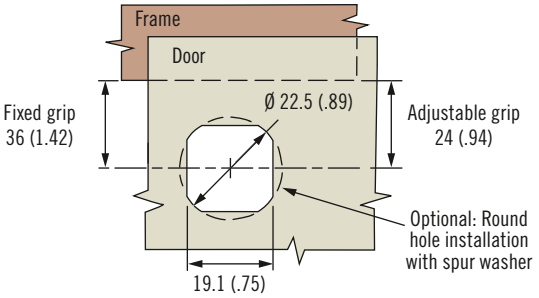

Dimensions in millimeters (inch) unless otherwise stated

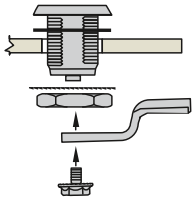

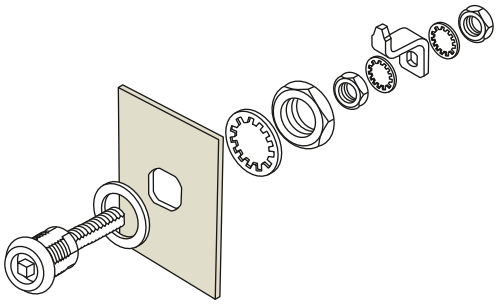

Part Number Selection

17 mm (.28)
Square

FIXED GRIP

E3 - H R 38 - UU0

R Rotation

12

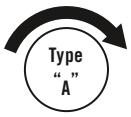

Latch unassembled
Turn clockwise to latch

29

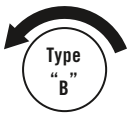

Latch unassembled
Turn counter-clockwise to latch

Fixed Grip Cam part number			
Grip	Part Number	Grip	Part Number
20 (.79)	E5-1200-24	40 (1.57)	E5-1210-24
22 (.87)	E5-1201-24	42 (1.65)	E5-1211-24
24 (.94)	E5-1202-24	44 (1.73)	E5-1212-24
26 (1.02)	E5-1203-24	46 (1.81)	E5-1213-24
28 (1.10)	E5-1204-24	48 (1.89)	E5-1214-24
30 (1.18)	E5-1205-24	50 (1.97)	E5-1215-24
32 (1.26)	E5-1206-24	52 (2.05)	E5-1216-24
34 (1.34)	E5-1207-24	54 (2.13)	E5-1217-24
36 (1.42)	E5-1208-24	56 (2.20)	E5-1218-24
38 (1.50)	E5-1209-24	58 (2.28)	E5-1219-24

ADJUSTABLE GRIP

E3 - H R 38 - 00

R Rotation

1

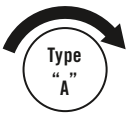

Latch unassembled
Turn clockwise to latch

22

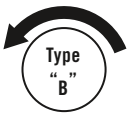

Latch unassembled
Turn counter-clockwise to latch

Adjustable Grip Cam part number			
Minimum Grip	Maximum Grip	Cam Type	Part Number
16.4 (.64)	32.2 (1.26)	Deep offset cam, forward	E3-28-201-24
71.3 (2.80)	81.2 (3.19)	Deep offset cam, reversed	
30.4 (1.19)	46.1 (1.81)	Offset cam, forward	E3-28-202-24
57.6 (2.26)	73.3 (2.88)	Offset cam, reversed	
43.9 (1.72)	59.6 (2.34)	Straight cam	E3-28-203-24

See table

Order latch and cam separately.

Select grip from Cam table if your grip is between two options choose the smaller grip

E3 *VISE ACTION*® Compression Latch

Stainless steel housing · Tool operated
Bi-Stable cover series · Fixed or adjustable grip · 19.1mm size

- **Consistent pre-set compression**
- **Premium finish**
- **Corrosion resistance**
- **Designed to work with separate bi-stable cover with fin**
- **Cover pops open when latch is not secure, providing visual indication of latch status**
- **Tool operated for security**
- **EN 45545-3 E60 Compliant**

Material and Finish

Latch: Stainless steel 304 and 316
Cover: Stainless steel 316

Performance Details

Compression: 6.4 mm (.25 in)
Maximum static load:
Adjustable Grip: 600 N (136 lbf)
Fixed Grip: 450 N (100 lbf)

Sealing Notes

Latch: NEMA 4 and IP65 enabled by using the supplied flange gasket

Latch with Bi-Stable Cover: NEMA 4 and IP66 enabled by using the supplied flange gasket

Installation Notes

Recommended tightening torque for the mounting nut is 20 N·m (176 in·lbf).
Adjustable Grip: Position cam so latching function can be achieved comfortably by hand.
Fixed Grip: Mounting screw torque 10 N·m (88 in·lbf)

Keys and Accessories

See pages 118-121 (modified head styles work with standard keys)

Make Safety Visible™
by Southco

www.southco.com/E3

FIXED GRIP

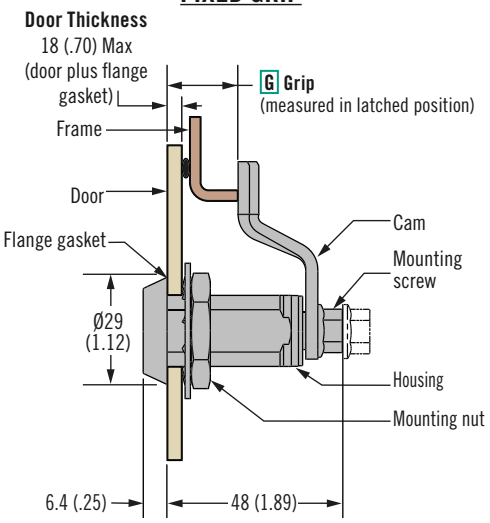

ADJUSTABLE GRIP

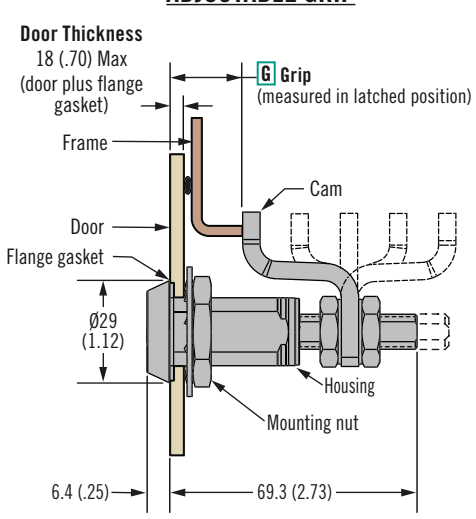

Bi-Stable Cover Latch

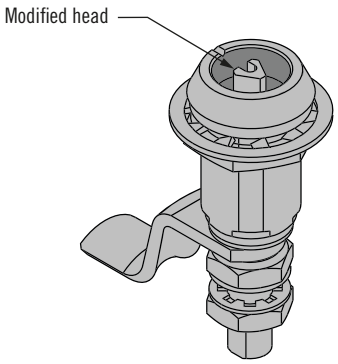

Bi-Stable Cover with fin

Part number E3-80-251-40 (ordered separately)

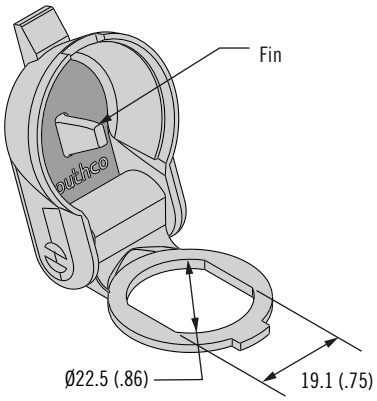

Cover in open position

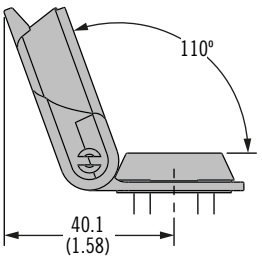

Cover returns to open position

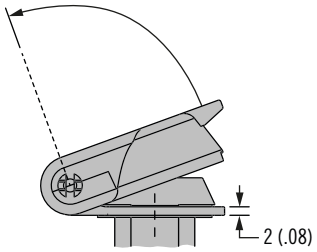

Cover in closed position

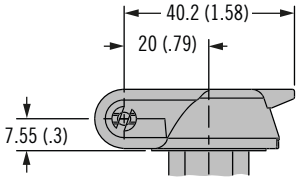

ACTUAL SIZE

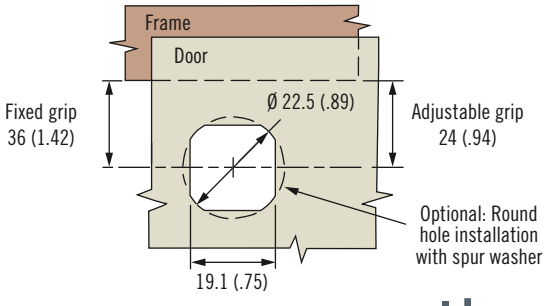

Dimensions in millimeters (inch) unless otherwise stated

southco®

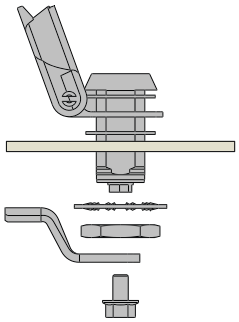

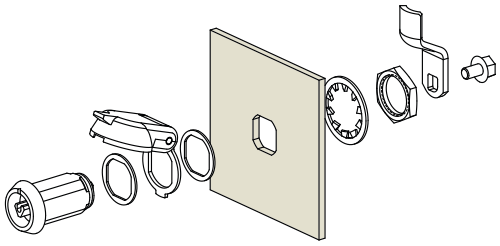

H Head Styles

3	4	10	11	15
7 (.28) Triangle	7 (.28) Square	8 (.32) Square driver	Railway standard	Bellcore 216

FIXED GRIP

R Rotation

12	29
Type "A"	Type "B"
Turn clockwise to latch	Turn counter-clockwise to latch

ADJUSTABLE GRIP

R Rotation

1	22
Type "A"	Type "B"
Turn clockwise to latch	Turn counter-clockwise to latch

E3 - R H B - UU0

Cam Part Number (order separately from latch)			
Grip	Part Number	Grip	Part Number
20 (.79)	E5-1200-24	40 (1.57)	E5-1210-24
22 (.87)	E5-1201-24	42 (1.65)	E5-1211-24
24 (.94)	E5-1202-24	44 (1.73)	E5-1212-24
26 (1.02)	E5-1203-24	46 (1.81)	E5-1213-24
28 (1.10)	E5-1204-24	48 (1.89)	E5-1214-24
30 (1.18)	E5-1205-24	50 (1.97)	E5-1215-24
32 (1.26)	E5-1206-24	52 (2.05)	E5-1216-24
34 (1.34)	E5-1207-24	54 (2.13)	E5-1217-24
36 (1.42)	E5-1208-24	56 (2.20)	E5-1218-24
38 (1.50)	E5-1209-24	58 (2.28)	E5-1219-24

E3 - R H B - 00

Cam Part Number (order separately from latch)			
Minimum Grip	Maximum Grip	Cam Type	Part Number
16.4 (.64)	32.2 (1.26)	Deep offset cam, forward	E3-28-201-24
71.3 (2.80)	81.2 (3.19)	Deep offset cam, reversed	
30.4 (1.19)	46.1 (1.81)	Offset cam, forward	E3-28-202-24
57.6 (2.26)	73.3 (2.88)	Offset cam, reversed	
43.9 (1.72)	59.6 (2.34)	Straight cam	E3-28-203-24

Part Number Selection

See table

Order Latch and Cam separately

Bi-Stable Cover with fin:
E3-80-251-40

Select grip from Cam table.
For Fixed Grip, if your grip is between two options choose the smaller grip

E3 *VISE ACTION*® Compression Latch

Stainless steel housing · Hand operated
T-Handle · Fixed or adjustable grip · 19.1mm size

- **Consistent pre-set compression**
- **Premium finish**
- **Corrosion resistance**
- **EN 45545-3 E60 Compliant**

Material and Finish
Stainless steel

Performance Details
Compression: 6.4 mm (.25 in)
Maximum static load:
Adjustable Grip: 600 N (136 lbf)
Fixed Grip: 450 N (100 lbf)

Sealing Notes
NEMA 4 and IP65 enabled by using supplied flange gasket

Installation Notes
Recommended tightening torque for the mounting nut is 20 N·m (176 in·lbf).
Adjustable Grip: Position cam so latching function can be achieved comfortably by hand.
Fixed Grip: Mounting screw torque 10 N·m (88 in·lbf)

FIXED GRIP

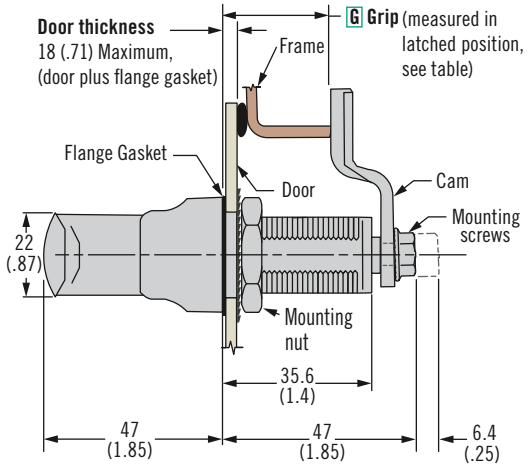

ADJUSTABLE GRIP

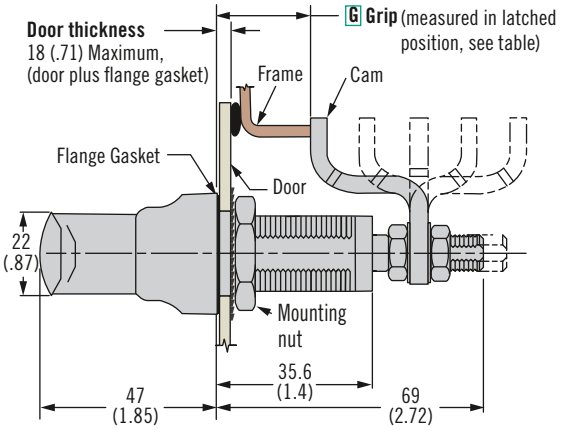

Latch open
Type "A" clockwise to latch

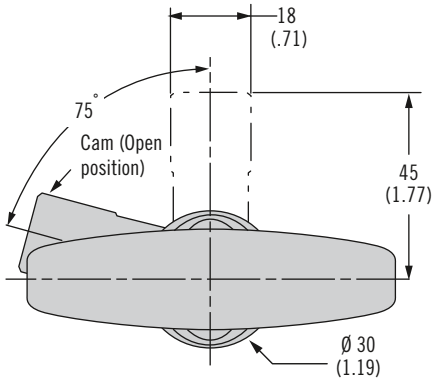

Latch closed
Type "A" clockwise to latch

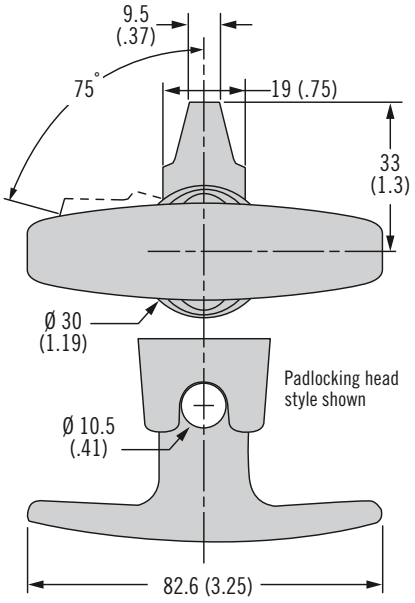

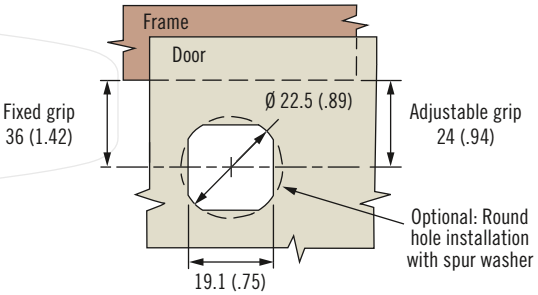

Dimensions in millimeters (inch) unless otherwise stated

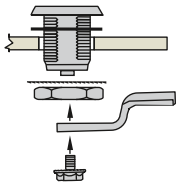

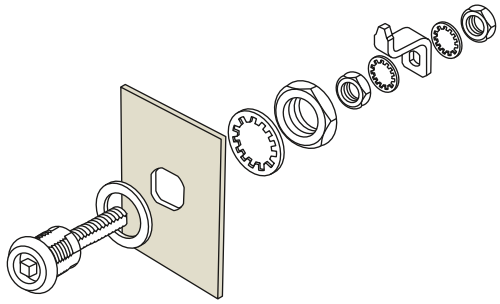

Part Number Selection

H Head Styles

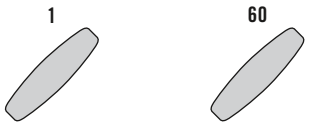

1 T-handle, non-locking

60 T-handle, padlocking

Fixed Grip

E3 - R H - UU12

R Rotation

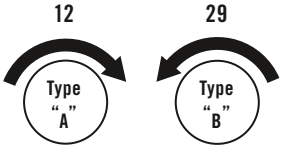

12 Turn clockwise to latch

29 Turn counter-clockwise to latch

Cam Part Number Table (order separately from latch)			
Grip	Part Number	Grip	Part Number
20 (.79)	E5-1200-24	40 (1.57)	E5-1210-24
22 (.87)	E5-1201-24	42 (1.65)	E5-1211-24
24 (.94)	E5-1202-24	44 (1.73)	E5-1212-24
26 (1.02)	E5-1203-24	46 (1.81)	E5-1213-24
28 (1.10)	E5-1204-24	48 (1.89)	E5-1214-24
30 (1.18)	E5-1205-24	50 (1.97)	E5-1215-24
32 (1.26)	E5-1206-24	52 (2.05)	E5-1216-24
34 (1.34)	E5-1207-24	54 (2.13)	E5-1217-24
36 (1.42)	E5-1208-24	56 (2.20)	E5-1218-24
38 (1.50)	E5-1209-24	58 (2.28)	E5-1219-24

Adjustable Grip

E3 - R H - 012

R Rotation

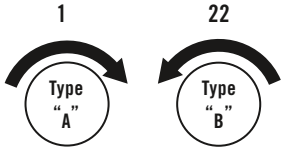

1 Turn clockwise to latch

22 Turn counter-clockwise to latch

Cam Part Number Table (order separately from latch)			
Minimum Grip	Maximum Grip	Cam Type	Part Number
16.4 (.64)	32.2 (1.26)	Deep offset cam, forward	E3-28-201-24
71.3 (2.80)	81.2 (3.19)	Deep offset cam, reversed	
30.4 (1.19)	46.1 (1.81)	Offset cam, forward	E3-28-202-24
57.6 (2.26)	73.3 (2.88)	Offset cam, reversed	
43.9 (1.72)	59.6 (2.34)	Straight cam	E3-28-203-24

See table
Order latch and cam separately

Select grip from table, if your grip is between two options choose smaller.

E3 *VISE ACTION*® Compression Latch

Stainless steel housing · Tool or hand operated
Fixed or adjustable grip · 19.1mm size

- **Consistent pre-set compression**
- **Available premium finish**
- **Corrosion resistance**
- **Tool operated for security**
- **EN 45545-3 E60 Compliant**

Material and Finish
Stainless steel 304 and 316

Performance Details
Compression: 6.4 mm (.25 in)
Maximum static load:
Adjustable Grip: 556 N (125 lbf)
Fixed Grip: 450 N (100 lbf)

Sealing Notes
NEMA 4 and IP65 enabled by using supplied flange gasket

Installation Notes
Recommended tightening torque for the mounting nut is 20 N·m (176 in·lbf).
Adjustable Grip: Position cam so latching function can be achieved comfortably by hand.
Fixed Grip: Mounting screw torque 10 N·m (88 in·lbf)

Keys and Accessories
See pages 118-121

FIXED GRIP

Door thickness
18 (.70) Max., latch unassembled
(door plus flange gasket)

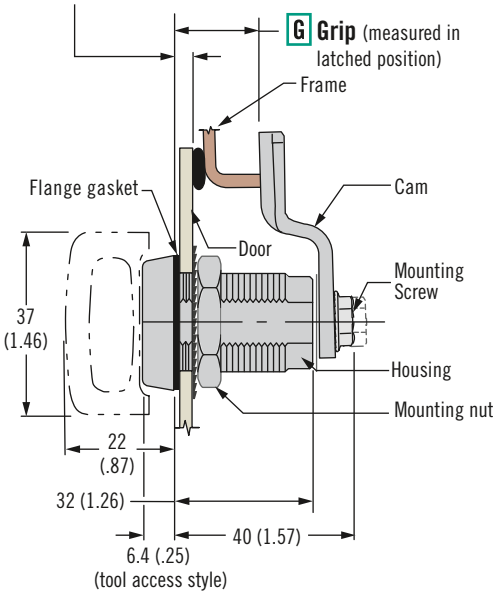

ADJUSTABLE GRIP

Door thickness
18 (.70) Maximum
(door plus flange gasket)

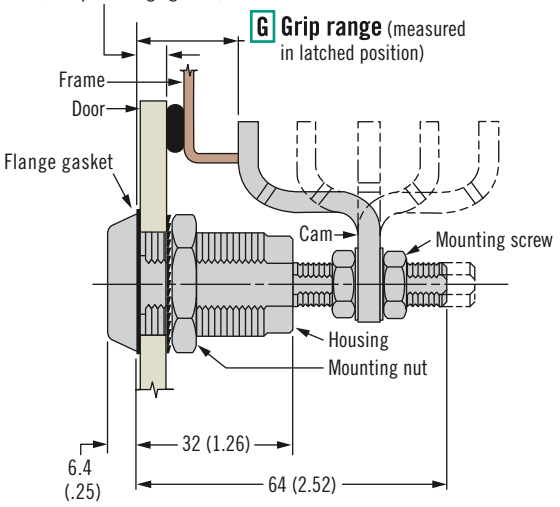

Latch open
Type "A" clockwise to latch

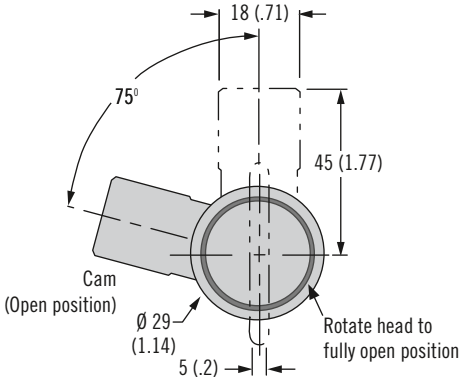

Latch closed
Type "A" clockwise to latch

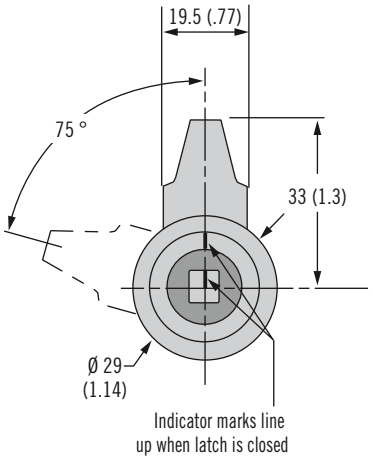

ACTUAL SIZE

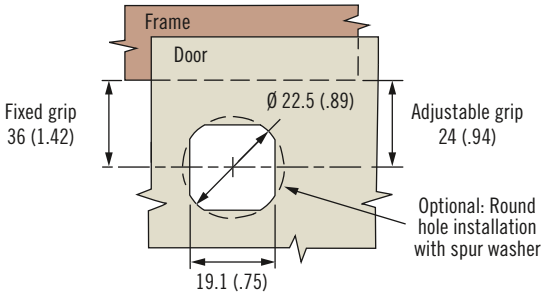

Dimensions in millimeters (inch) unless otherwise stated

southco®

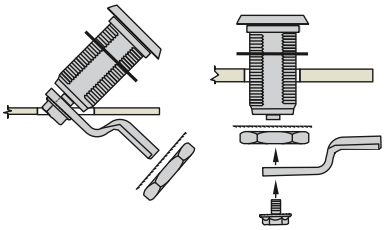

Assembled Installation

Unassembled Installation

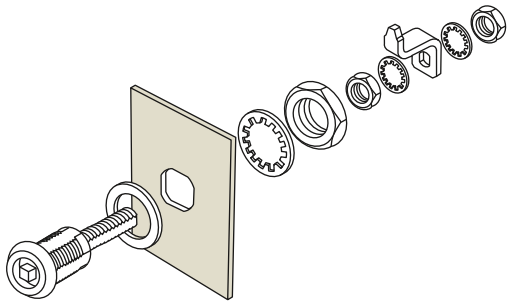

Part Number Selection

E3 - R H - G F

F Finish

2 Electropolished
12 Electropolished and hand buffed (bright)

H Head Styles

3	5	6	7	9	10	11	20	39
7 (.28) Triangle	*SOUTHCO*® Tubular key	8 (.32) Hex recess	Standard knob	Slotted recess	8 (.32) Square driver	Railway standard	8 (.32) Triangle	7 (.28) Tapered Triangle

FIXED GRIP

R Rotation

10	12	27	29
Type "A"	Type "A"	Type "B"	Type "B"
Latch assembled Turn clockwise to latch	Latch unassembled Turn clockwise to latch	Latch assembled Turn counter-clockwise to latch	Latch unassembled Turn counter-clockwise to latch

G Grip Table

Total Grip	G	Max. Door Thickness for Assembled Latch	Total Grip	G	Max. Door Thickness for Assembled Latch
15 (.59)	00	Use unassembled	35 (1.38)	10	7 (.28)
17 (.67)	01	Use unassembled	37 (1.46)	11	
19 (.75)	02	1 (.04)	39 (1.53)	12	
21 (.83)	03	2 (.08)	41 (1.61)	13	
23 (.91)	04	4 (.16)	43 (1.69)	14	
25 (.98)	05	5 (.20)	45 (1.77)	15	
27 (1.06)	06	6 (.24)	47 (1.85)	16	
29 (1.14)	07	7 (.28)	49 (1.93)	17	
31 (1.22)	08		51 (2.01)	18	
33 (1.30)	09		53 (2.09)	19	

For Fixed Grip, if your grip is between two options choose the smaller grip

ADJUSTABLE GRIP

R Rotation

1	22
Type "A"	Type "B"
Latch unassembled Turn clockwise to latch	Latch unassembled Turn counter-clockwise to latch

G Grip	Minimum	Maximum	Cam Type
1	11.4 (.45)	27.2 (1.07)	Deep offset cam, forward
	66.3 (2.61)	76.2 (3.00)	Deep offset cam, reversed
2	25.4 (1.00)	41.1 (1.62)	Offset cam, forward
	52.6 (2.07)	68.3 (2.69)	Offset cam, reversed
3	38.9 (1.53)	54.6 (2.15)	Straight cam

Dimensions in millimeters (inch) unless otherwise stated

E3 *VISE ACTION*® Compression Latch

Stainless steel housing · Tool operated
Visual indicator of latch status · Fixed or adjustable grip · 19.1mm size

- **Feature indicates when latch is open**
- **Consistent pre-set compression**
- **Premium finish**
- **Corrosion resistance**
- **Tool operated for security**
- **EN 45545-3 E60 Compliant**

Material and Finish
Stainless steel 304 and 316

Performance Details
Compression: 6.4 mm (.25 in)
Adjustable Grip: Maximum static load: 450 N (100 lbf)
Fixed Grip: Maximum static load: 450 N (100 lbf)

Sealing Notes
NEMA 4 and IP66/IP67 enabled by using supplied flange gasket

Installation Notes
Recommended tightening torque for the mounting nut is 20 N·m (176 in·lbf).
Adjustable Grip: Position cam so latching function can be achieved comfortably by hand.
Fixed Grip: Mounting screw torque 10 Nm (88 in lbf)

Keys and Accessories
See pages 118-121

FIXED GRIP

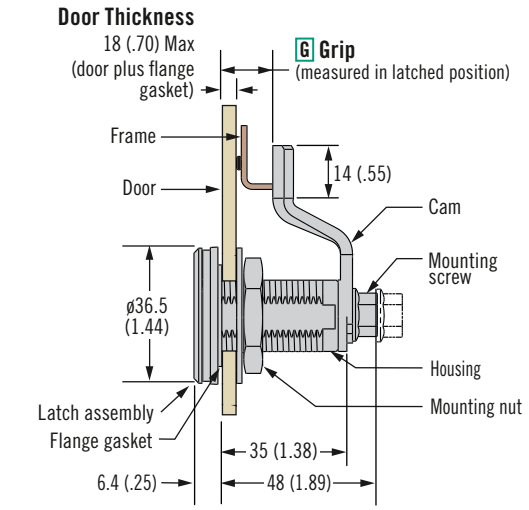

ADJUSTABLE GRIP

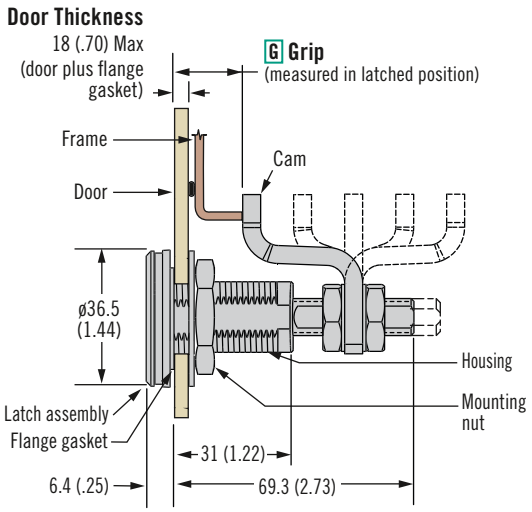

Latch Open

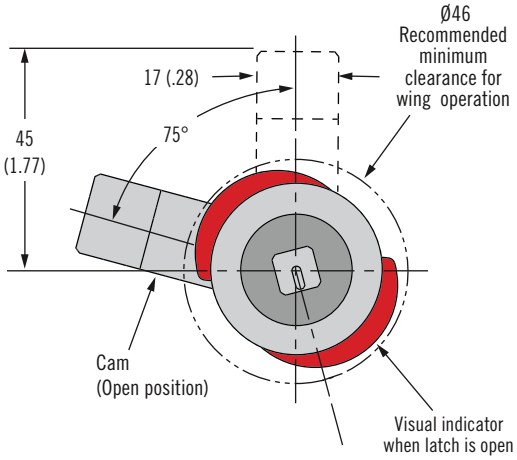

Latch Closed

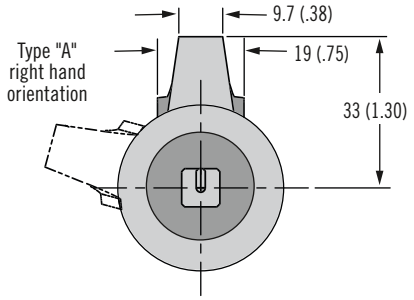

ACTUAL SIZE

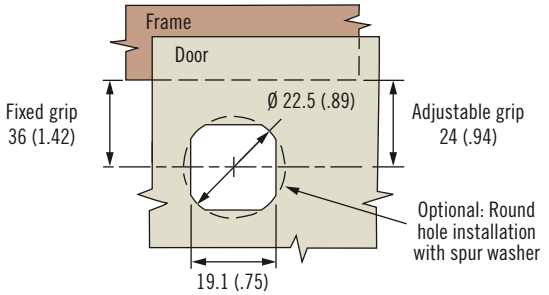

Make Safety Visible™ by Southco

www.southco.com/E3

Dimensions in millimeters (inch) unless otherwise stated

southco®

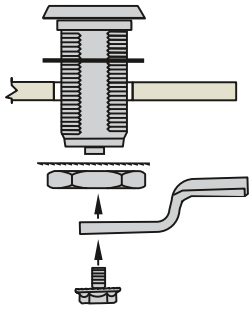

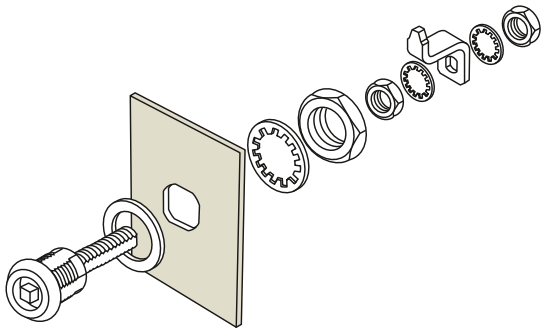

H Head Styles

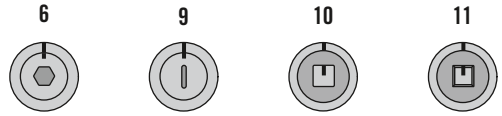

FIXED GRIP

R Rotation

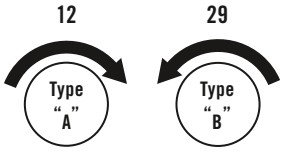

ADJUSTABLE GRIP

R Rotation

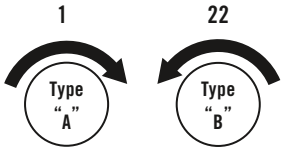

Part Number Selection
See table
Order Latch and Cam separately

Select grip from Cam table.
For Fixed Grip, if your grip is between two options choose the smaller grip

E3 - A R H - UU2

Cam Part Number (order separately from latch)			
Grip	Part Number	Grip	Part Number
15 (.59)	E3-28-700-24	35 (1.38)	E3-28-710-24
17 (.67)	E3-28-701-24	37 (1.46)	E3-28-711-24
19 (.75)	E3-28-702-24	39 (1.53)	E3-28-712-24
21 (.83)	E3-28-703-24	41 (1.61)	E3-28-713-24
23 (.91)	E3-28-704-24	43 (1.69)	E3-28-714-24
25 (.98)	E3-28-705-24	45 (1.77)	E3-28-715-24
27 (1.06)	E3-28-706-24	47 (1.85)	E3-28-716-24
29 (1.14)	E3-28-707-24	49 (1.93)	E3-28-717-24
31 (1.22)	E3-28-708-24	51 (2.01)	E3-28-718-24
33 (1.30)	E3-28-709-24	53 (2.09)	E3-28-719-24

E3 - A R H - 02

Cam Part Number (order separately from latch)			
Minimum Grip	Maximum Grip	Cam Type	Part Number
11.4 (.45)	27.2 (1.07)	Deep offset cam, forward	E3-28-201-24
66.3 (2.61)	76.2 (3.00)	Deep offset cam, reversed	
25.4 (1.00)	41.1 (1.62)	Offset cam, forward	E3-28-202-24
52.6 (2.07)	68.3 (2.69)	Offset cam, reversed	
38.9 (1.53)	54.6 (2.15)	Straight cam	E3-28-203-24

E3 *VISE ACTION*® Compression Latch

Aluminum housing · Tool operated
Fixed or adjustable grip · 19.1mm size

- **Light weight**
- **Consistent pre-set compression**
- **Premium finish**
- **Corrosion resistance**
- **Tool operated for security**
- **EN 45545-3 E30 Compliant**

Material and Finish

Aluminum, anodized or powder coated
Black hard anodized assembly - Stainless Steel cam and hardware
All other finishes - Steel cam and hardware

Performance Details

Compression: 6.4 mm (.25 in)
Maximum static load: 530 N (120 lbf)

Complies with DIN EN 61373 vibration standard

Sealing Notes

NEMA 4 and IP65 enabled by using supplied flange gasket

Installation Notes

Recommended tightening torque for the mounting nut is
20 N m (176 in lbf).
Position cam so latching function can be achieved comfortably by hand.

Keys and Accessories

See pages 118-121

Part Number Selection

See table.

FIXED GRIP

Door thickness
18 (.71), latch unassembled.
(door plus flange gasket)

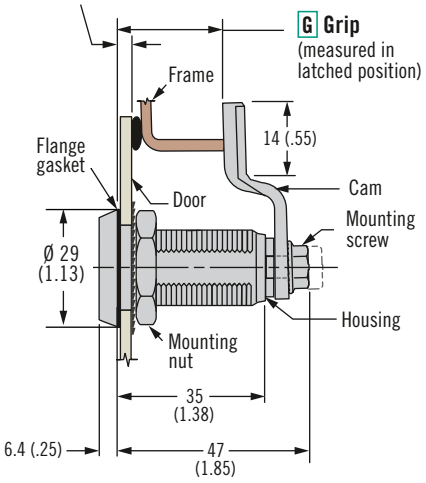

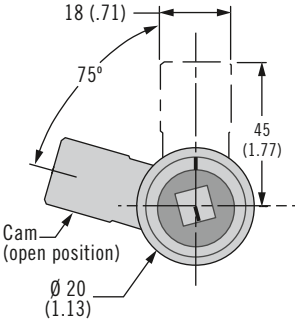

ADJUSTABLE GRIP

Door thickness
18 (.71) Maximum,latch unassembled
(door plus flange gasket)

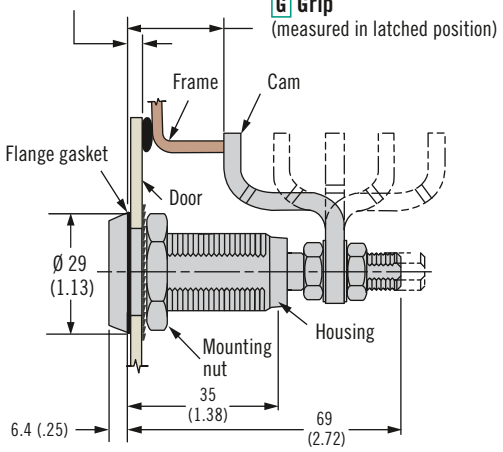

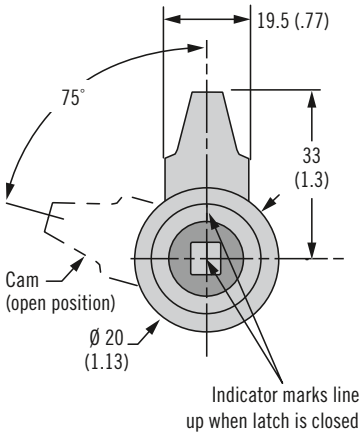

ACTUAL SIZE

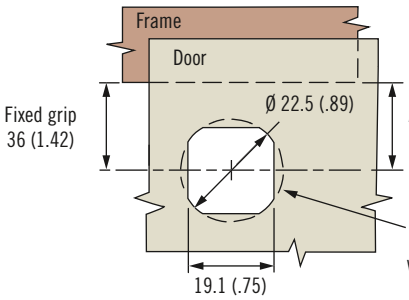

Dimensions in millimeters (inch) unless otherwise stated

southco®

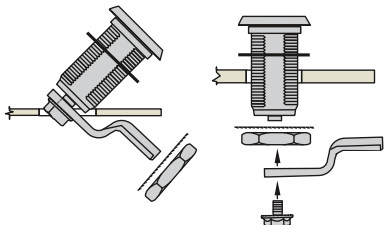

Assembled installation

Unassembled installation

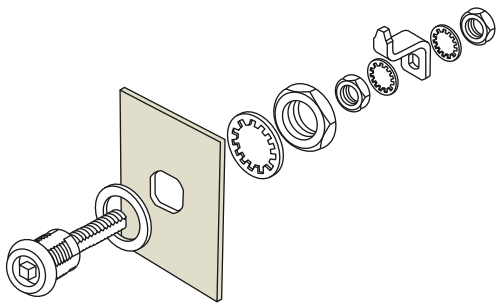

Part Number Selection

E3 - R H - G F

F Finish

59 Black Hard Anodized
06 Clear Powder Coat
56 Black Powder Coat
76 Silver Powder Coat

H Head Styles

3 7 (.28) Triangle

4 7 (.28) Square

6 8 (.32) Hex recess

9 Slotted recess

10 8 (.32) Square driver

11 Railway standard

15 Bellcore 216

FIXED GRIP

R Rotation

10 Type "A" — Latch assembled, Turn clockwise to latch

12 Type "A" — Latch unassembled, Turn clockwise to latch

27 Type "B" — Latch assembled, Turn counter-clockwise to latch

29 Type "B" — Latch unassembled, Turn counter-clockwise to latch

G Grip Table

Total Grip	G	Max. Door Thickness for Assembled Latch	Total Grip	G	Max. Door Thickness for Assembled Latch
20 (.79)	00	1 (.04)	40 (1.57)	10	7 (.28)
22 (.87)	01	2 (.08)	42 (1.65)	11	
24 (.94)	02	4 (.16)	44 (1.73)	12	
26 (1.02)	03	5 (.20)	46 (1.81)	13	
28 (1.10)	04	6 (.24)	48 (1.89)	14	
30 (1.18)	05	7 (.28)	50 (1.97)	15	
32 (1.25)	06		52 (2.05)	16	
34 (1.34)	07		54 (2.13)	17	
36 (1.42)	08		56 (2.20)	18	
38 (1.50)	09		58 (2.28)	19	

For Fixed Grip, if your grip is between two options choose the smaller grip

ADJUSTABLE GRIP

R Rotation

1 Type "A" — Latch unassembled, Turn clockwise to latch

22 Type "B" — Latch unassembled, Turn counter-clockwise to latch

G Grip	Minimum	Maximum	Cam Type
1	16.4 (.64)	32.2 (1.26)	Deep offset cam, forward
	71.3 (2.80)	81.2 (3.19)	Deep offset cam, reversed
2	30.4 (1.19)	46.1 (1.81)	Offset cam, forward
	57.6 (2.26)	73.3 (2.88)	Offset cam, reversed
3	43.9 (1.72)	59.6 (2.34)	Straight cam

Dimensions in millimeters (inch) unless otherwise stated

E3 *VISE ACTION*® Compression Latch

Stainless steel housing · Tool or hand operated
Adjustable grip · 13.5mm size

- **Reduced dimensions**
- **Consistent pre-set compression**
- **Easy grip**
- **Corrosion resistance**
- **Tool operated for security**
- **EN 45545-3 E60 Compliant**

Material and Finish
Stainless steel 304 and 316

Performance Details
Compression: 4 mm (.17 in)
Maximum static load: 356 N (80 lbf)

Sealing Notes
NEMA 4 and IP65 enabled by using supplied flange gasket

Installation Notes
Recommended tightening torque for the mounting nut is 20 N·m (176 in·lbf).
Position cam so latching function can be achieved comfortably by hand.

Keys & Accessories
See pages 118-121

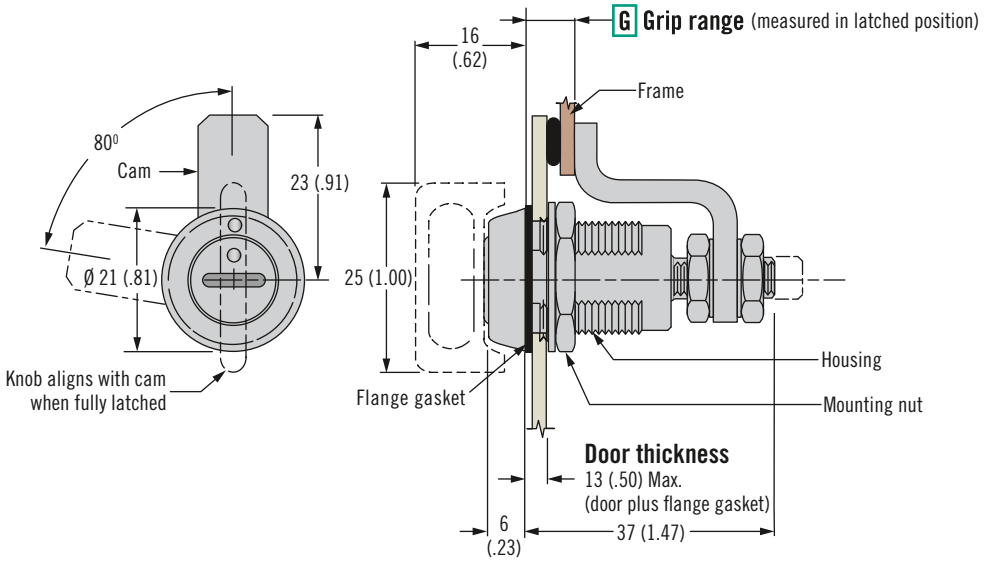

ACTUAL SIZE

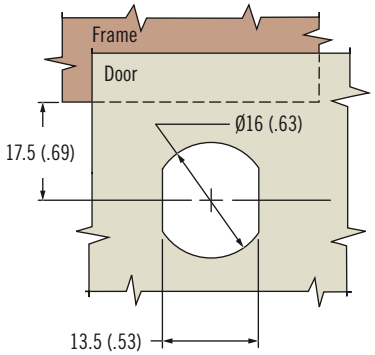

Dimensions in millimeters (inch) unless otherwise stated

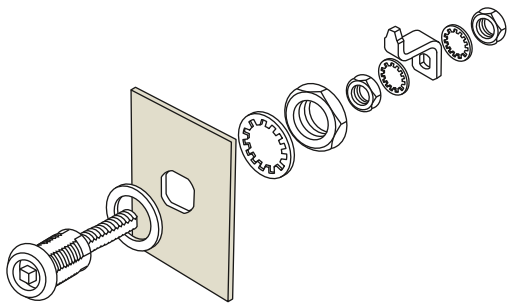

Part Number Selection
See table

E3 - R H - G F

F Finish
2 Electropolished

H Head Styles

5	6	7	9
SOUTHCO® Tubular key	4 (.16) Hex recess	Knob style	Slotted recess

R Rotation

5	24
Type "A"	Type "B"
Latch unassembled Turn clockwise to latch	Latch unassembled Turn counter-clockwise to latch

G Grip	Minimum	Maximum
1	3.2 (.13)	6.4 (.25)
2	6.4 (.25)	9.5 (.37)
3	9.5 (.37)	12.7 (.50)
4	12.7 (.50)	15.9 (.63)
5	15.9 (.63)	19 (.75)
6	19 (.75)	22.2 (.87)
7	22.2 (.87)	25.4 (1)
8	25.4 (1)	28.6 (1.13)

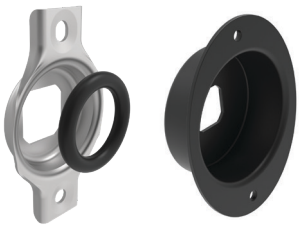

E3 *VISE ACTION*® Compression Latch Accessories

Fixed mounting bracket · Flush cup

Material and Finish

Stainless steel or galvanized steel with rubber o-ring

Sealing Notes

Environmental sealing is achieved by using latch with flange gasket and sealing the mounting screw threads.

Notes

For use with 19.1mm size single hole mount tool operated E3 *VISE ACTION*® compression latches

Flush Mounting Bracket

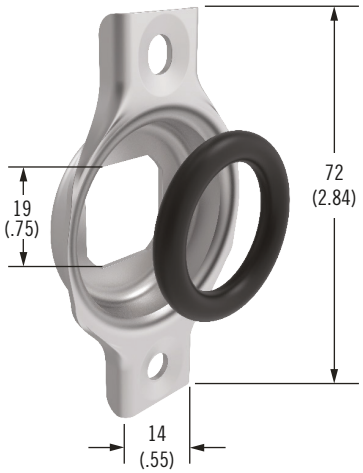

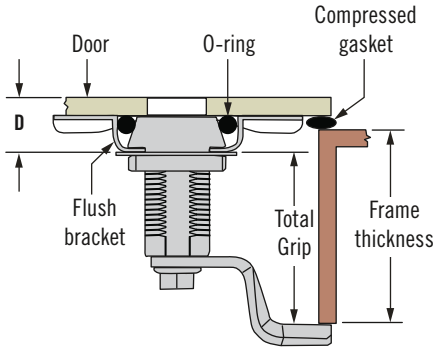

To calculate the **Total Grip,** subtract cup depth **(D)** from **frame thickness + compressed gasket**

E3 - 77 - 25 D - M

D **Depth**
- **1** 6.6 mm (for tool head style)
- **2** 9.3 mm (for Railway standard or Bellcore 216 head style only)

M **Material**
- **12** Galvanized steel
- **24** Stainless steel 304

Material and Finish

Carbon steel, black powder coated

Flush Cup

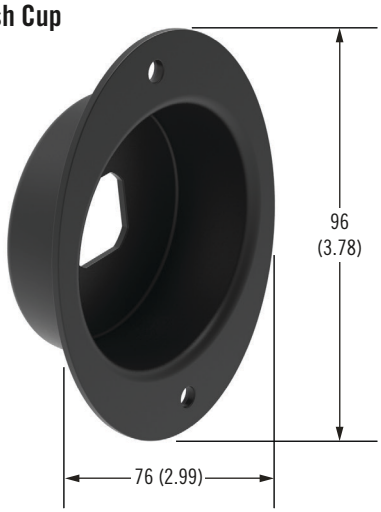

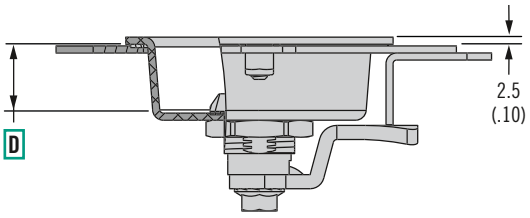

To calculate total grip, add cup depth **(D)** to latch grip

E5 - 2 M - 61 D - 5

M **Mounting Style**
- **0** M5 studs
- **1** Through hole

D **Depth**
- **1** 19 mm (for wingknob head style)
- **2** 4 mm (for tool head style)

Dimensions in millimeters (inch) unless otherwise stated

E3 *VISE ACTION*® Compression Latch Accessories

Flange gaskets · Spur washers · Sealing covers

Flange gasket

13.5mm size

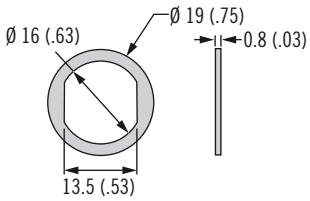

19.1mm size

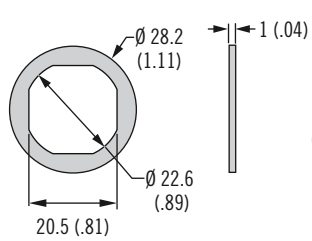

Type	Part Number
Flange gasket 13.5mm size	E3-0-30268-02
Flange gasket 19.1mm size	E5-17
Flange gasket 19.1mm size	E5-17-101

Spur Washer

19.1mm size

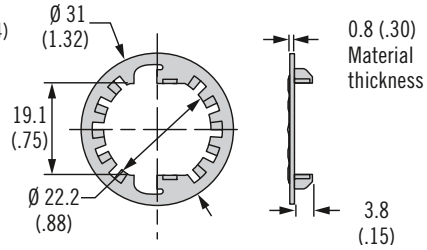

Type	Part Number
Spur washer 19.1mm size	90-6-875

Material and Finish

Flange gasket: Neoprene, natural
Spur washer: Steel, zinc plated

Notes

Spur washer provides for round hole installation in wood and similar materials of low density

Adjustment Formula

Flange gasket : add 0.4 (.02) to door thickness
Spur washer : add 0.8 (.03) to door thickness

Sealing Cover

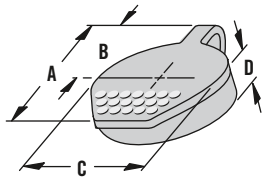

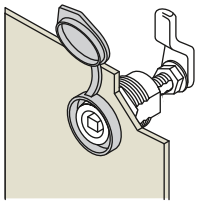

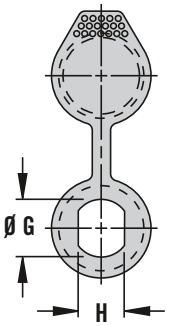

Latch Installation Hole Size		Dimensions			
Ø G	F	A	B	Ø C	D
16 (.63)	13.5 (.53)	40 (1.58)	20 (.85)	29 (1.13)	10.5 (.42)
22.5 (.88)	19.6 (.77)	47 (1.84)	28 (1.09)	35 (1.38)	11.7 (.46)

Type	Part Number
Sealing cover 13.5mm size	90-1
Sealing cover 19.1mm size	90-3

Material and Finish

Sealing cover: Thermoplastic elastomer, black

Notes

Thermoplastic sealing cover cannot be used with Railway standard or Bellcore 216 styles

Adjustment Formula

Sealing cover : add 2.3 (.09) to door thickness

Bi-Stable Sealing Cover – Stainless Steel

Cover in open position

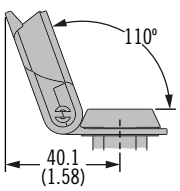

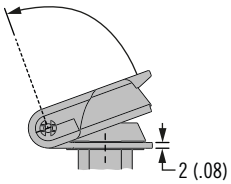

Cover returns to open position

Cover in closed position

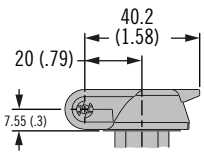

Type	Part Number
Bi-Stable sealing cover 19.1mm size	E3-80-252-40

Material and Finish

Sealing cover: Stainless steel, electropolished

Notes

Bi-Stable sealing cover can only be used with tool head styles

Adjustment Formula

Sealing cover : add 2.0 (.08) to door thickness

E3 *VISE ACTION*® Compression Latch Accessories

Padlock brackets · Pull tabs · Sleeve nuts

Material and Finish

Stainless steel, black powder coated

Sealing Notes

To provide sealing use two flange gaskets and add compressed thickness of each flange gasket and bracket thickness to your door thickness.

Notes

Padlock bracket: For 19.1mm size single hole mount tool operated only
Only unassembled styles can be used with round padlock bracket

Notes

Add 2.0 (.08) to door thickness

Material and Finish

Nylon, black

Adjustment Formula

Add 2.0 (.08) to door thickness

Material and Finish

Zinc alloy

Installation Notes

For use in double skin doors.
Product standard panel cutout in outer door and for the inner door produce 25 (.98) hole for sleeve nut

Padlock Bracket (Square)

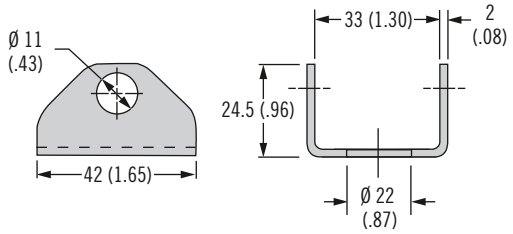

Padlock Bracket (Round)

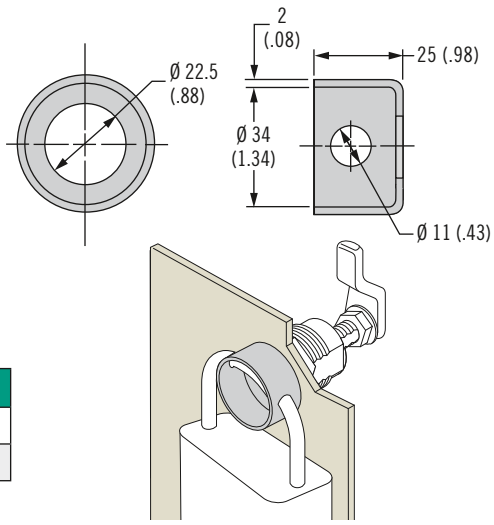

Type	Part Number
Padlock bracket square	E3-77-101-31
Padlock bracket round	E3-77-102-31

Pull Tab (13.5mm size)

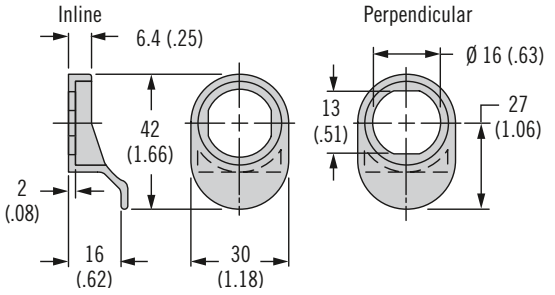

Pull Tab (19.1mm size)

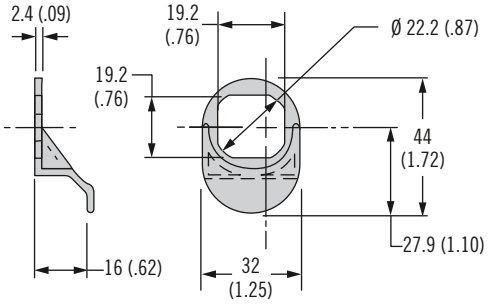

Type	Part Number
Pull tab 13.5 mm size – In-line	E3-27-61
Pull tab 13.5 mm size – Perpendicular	E3-27-62
Pull tab 19.1 mm size	E3-27-1

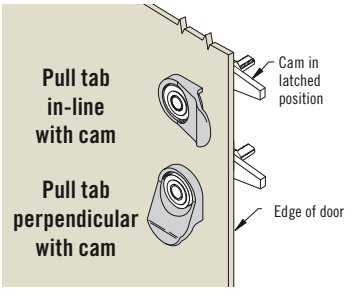

Sleeve Nut M22 Thread (for 19.1mm size E3 only)

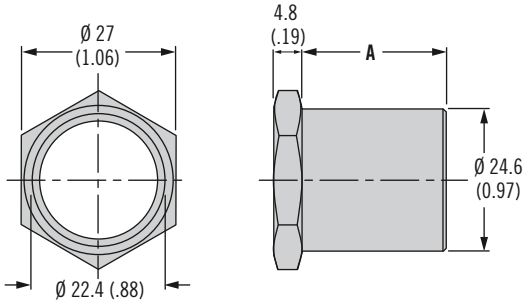

Type	A	Part Number
Sleeve Nut – short	12.7 (.50)	E3-34-263-36
Sleeve Nut - long	25 (.98)	E3-34-264-36

Dimensions in millimeters (inch) unless otherwise stated

southco®

Tool Operated Key

F Finish
1 Plated zinc
2 Natural zinc
3 Nylon black

E3 - H - F

H Head style

Southco® Tubular Key

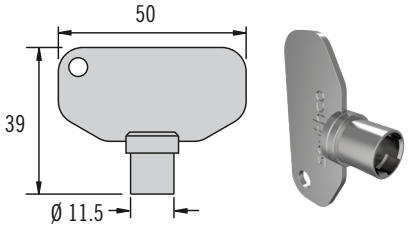

Material and Finish

Tool Operated: Zinc, bright nickel plate or natural and nylon, black
Tubular: Steel, bright nickel plate

2

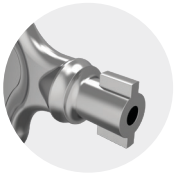

3 (.11) Double bit

3

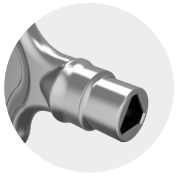

7 (.28) Triangle

4

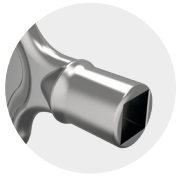

7 (.28) Square

7

8 (.32) Triangle

8

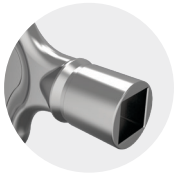

8 (.32) Square recess

9

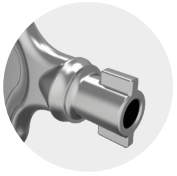

5 (.19) Double bit

10

8 (.32) Square male

11

Bellcore electronics

12

Bellcore 216

14

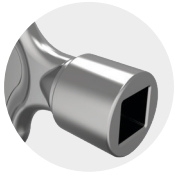

Railway Standard

15

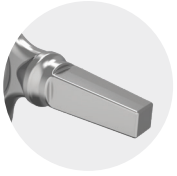

Railway male

16

7 (.28) Tapered triangle

17

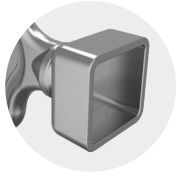

17 (.67) square

E3-5-15

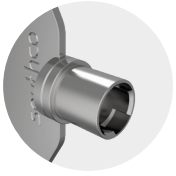

Southco® Tubular
19.1 (.75)

E3-26-819-15

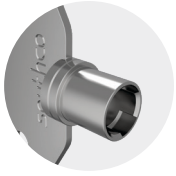

Southco® Tubular
13.5 (.65)

Part Number

Overmolded key CH751:
Single: PK-10-10-05
Pair: PK-10-01-05

Overmolded key R001:
Single: PK-10-10-05-KR001
Pair: PK-10-01-05-KR001

Flat keys
Single: PK-10-10
Pair: PK-10-01

Overmolded Keys

Key CH751
PK-10-10-05

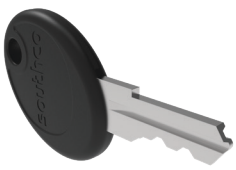

Key R001
PK-10-10-05-KR001

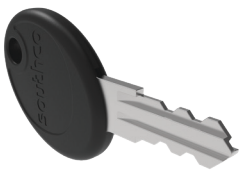

Flat Keys

Key CH751
PK-10-10

Dimensions in millimeters (inch) unless otherwise stated

E9 Quarter Turn Compression Latch

Zinc housing · Tool operated
Fixed or Adjustable grip · 20.1 mm size

- **Quarter turn actuation**
- **Rotates and compresses at same time**
- **Consistent pre-set compression**
- **Tool operated for security**

Material and Finish
Zinc alloy, powder coated or chrome plated and steel, zinc plated.

Performance Details
Compression: 4.0 mm (.16 in)

Installation Notes
Adjustable Grip: Position cam so latching function can be achieved comfortably by hand.

Keys
See page 121

Accessories
See pages 174-175

Optional Keeper for Roller Cam
Part number E5-74-601-33
(if selected, add 4 mm to grip calculation)

Fixed Grip

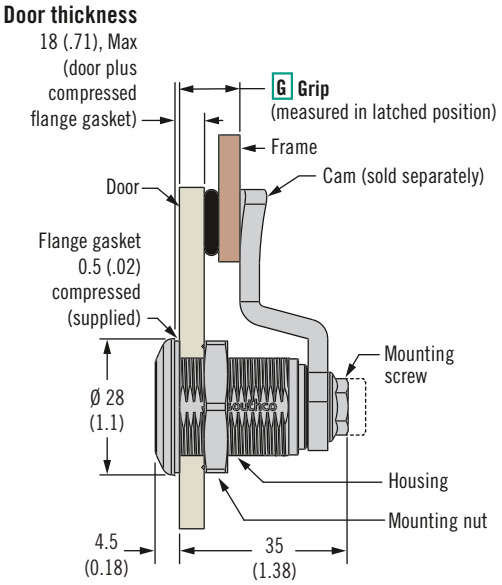

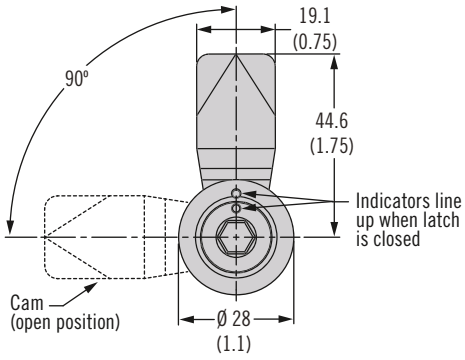

Adjustable Grip

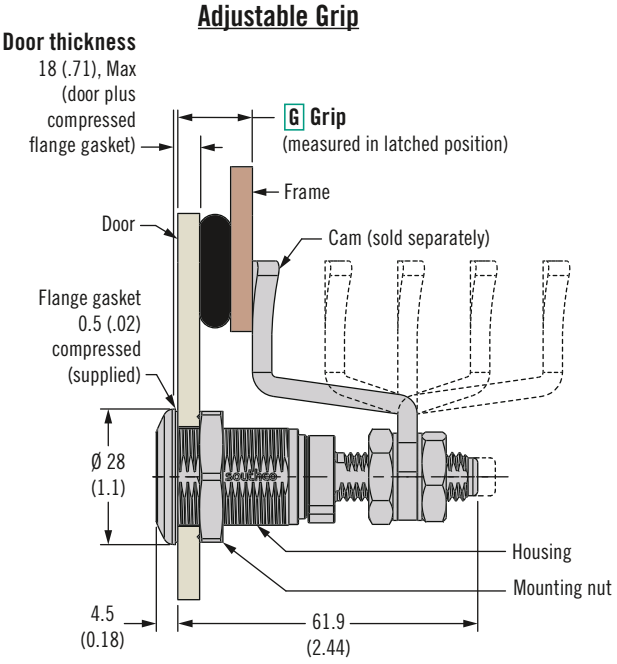

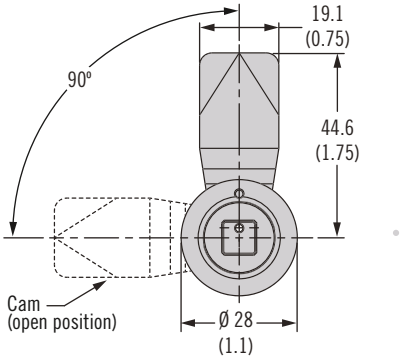

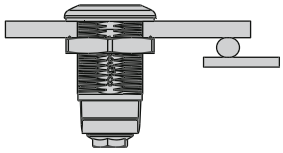

The first 30°turn:
Cam rotates behind the frame

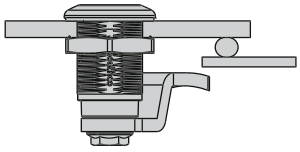

The cam then compresses during the remaining rotation

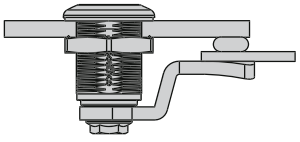

Completing the quarter turn motion, the shaft and cam compress to pull the door against the frame

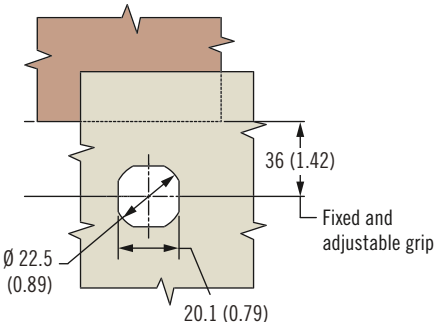

Dimensions in millimeters (inch) unless otherwise stated

southco®

Latch Installation Method

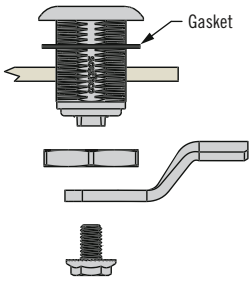

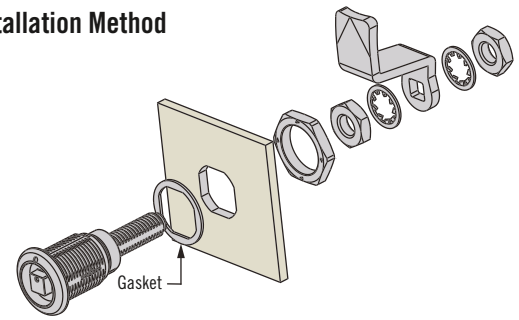

Part Number Selection

Order latch and cam separately

R Rotation

M Finish
- **1** Chrome Plated
- **5** Black powder coated
- **7** Silver powder coated

E9 - A0 HH R - 0 M

HH Head Styles

00	01	02	03	04	05	06	07	08	09
Slotted recess	8 (.32) Hex recess	7 (.28) Triangle	8 (.32) Triangle	7 (.28) Square	8 (.32) Square	3 (.11) Double bit	5 (.19) Double bit	8 (.32) Square recess	*SOUTHCO*® Tubular key

10	11	12
Bellcore 216	Bellcore electronics	Railway standard

R Rotation — **Fixed Grip**

F: Latch unassembled Turn clockwise to latch

G: Latch unassembled Turn counter-clockwise to latch

R Rotation — **Adjustable Grip**

A: Latch unassembled Turn clockwise to latch

B: Latch unassembled Turn counter-clockwise to latch

Cam Options – See Page 124-125

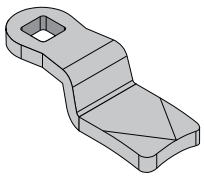

Cam
- Stable frame engagement
- Improved surface contact
- Minimal frame surface prep

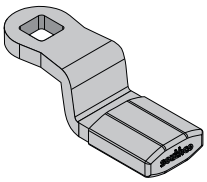

Protected Cam
- Protective cam covering
- Provides smoother operation
- Reduces scratching frame

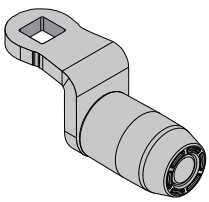

Roller Cam
- Reduces operating effort
- Minimize scratching frame finish
- Detented feel (with optional keeper)

Dimensions in millimeters (inch) unless otherwise stated

E9 Quarter Turn Compression Latch Accessories

Cams

Material and Finish

Cam: Steel
Protected cam: Steel, nylon
Roller cam: Steel, nylon

Cam Options

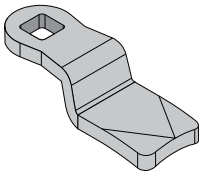

Cam

- Stable frame engagement
- Improved surface contact
- Minimal frame surface prep

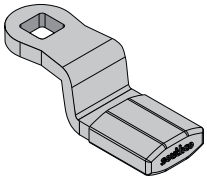

Protected Cam

- Protective cam covering
- Provides smoother operation
- Reduces scratching frame

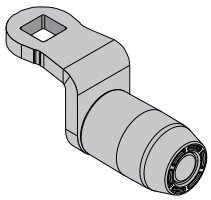

Roller Cam

- Reduces operating effort
- Minimize scratching frame finish
- Detented feel (with optional keeper)

Fixed Grip Cams – for use with E9 zinc latches

Cam Part Number Table (order separately from latch)					
Grip	Cam Part Number	Grip	Protected Cam Part Number	Grip	Roller Cam Part Number
1 (.04)	E5-6126	1 (.04)	E5-6121-P	1 (.04)	E5-7116
3 (.12)	E5-6125	3 (.12)	E5-6120-P	3 (.12)	E5-7115
5 (.20)	E5-6124	5 (.20)	E5-6119-P	5 (.20)	E5-7114
7 (.28)	E5-6123	7 (.28)	E5-6118-P	7 (.28)	E5-7113
9 (.35)	E5-6101	9 (.35)	E5-6117-P	9 (.35)	E5-7112
11 (.43)	E5-6102	11 (.43)	E5-6116-P	11 (.43)	E5-7111
13 (.51)	E5-6103	13 (.51)	E5-6115-P	13 (.51)	E5-7110
15 (.59)	E5-6104	15 (.59)	E5-6114-P	15 (.59)	E5-7109
17 (.67)	E5-6105	17 (.67)	E5-6113-P		
19 (.75)	E5-6106	19 (.75)	E5-6112-P		
21 (.83)	E5-6107	21 (.83)	E5-6111-P		
23 (.91)	E5-6108	23 (.91)	E5-6110-P		
25 (.98)	E5-6109	25 (.98)	E5-6109-P	25 (.98)	E5-7109
27 (1.06)	E5-6110	27 (1.06)	E5-6110-P	27 (1.06)	E5-7110
29 (1.14)	E5-6111	29 (1.14)	E5-6111-P	29 (1.14)	E5-7111
31 (1.22)	E5-6112	31 (1.22)	E5-6112-P	31 (1.22)	E5-7112
33 (1.30)	E5-6113	33 (1.30)	E5-6113-P	33 (1.30)	E5-7113
35 (1.38)	E5-6114	35 (1.38)	E5-6114-P	35 (1.38)	E5-7114
37 (1.46)	E5-6115	37 (1.46)	E5-6115-P	37 (1.46)	E5-7115
39 (1.54)	E5-6116	39 (1.54)	E5-6116-P	39 (1.54)	E5-7116
41 (1.61)	E5-6117	41 (1.61)	E5-6117-P	41 (1.61)	E5-7117
43 (1.69)	E5-6118	43 (1.69)	E5-6118-P	43 (1.69)	E5-7118
45 (1.77)	E5-6119	45 (1.77)	E5-6119-P	45 (1.77)	E5-7119
47 (1.85)	E5-6120	47 (1.85)	E5-6120-P	47 (1.85)	E5-7120
49 (1.93)	E5-6121	49 (1.93)	E5-6121-P	49 (1.93)	E5-7121
51 (2.01)	E5-6122	51 (2.01)	E5-6122-P	51 (2.01)	E5-7122
		53 (2.09)	E5-6123-P		

If grip falls between two choices, use smaller option

Dimensions in millimeters (inch) unless otherwise stated

Fixed Grip Latch

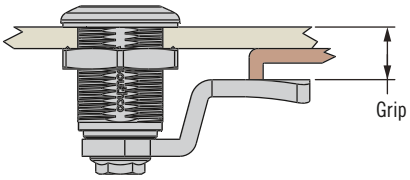

Adjustable Grip Latch

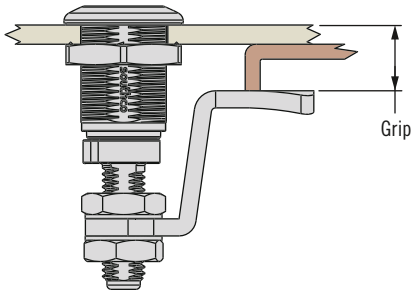

Adjustable Grip Cams – for use with E9 zinc latches

Cam Part Number Table (order separately from latch)			
Minimum Grip	**Maximum Grip**	**Cam Type**	**Part Number**
9 (.35)	20.5 (.81)	Offset cam	E5-4128
17 (.67)	28.5 (1.12)	Offset cam	E5-4124
25 (.98)	36.5 (1.44)	Offset cam	E5-4103
33 (1.30)	44.5 (1.75)	Offset cam	E5-4107
41 (1.61)	52.5 (2.07)	Offset cam	E5-4111
49 (1.93)	60.5 (2.38)	Offset cam	E5-4115
57 (2.24)	68.5 (2.70)	Offset cam	E5-4119
63 (2.48)	74.5 (2.93)	Offset cam	E5-4122

Protected Cam Part Number Table (order separately from latch)			
Minimum Grip	**Maximum Grip**	**Cam Type**	**Part Number**
14 (.55)	25.5 (1.00)	Deep offset cam, forward	E5-4001
25.5 (1.00)	37 (1.46)	Offset cam, forward	E5-4002
37 (1.46)	48.5 (1.91)	Straight cam	E5-4003
48.5 (1.91)	60 (2.36)	Offset cam, reverse	E5-4002
60 (2.36)	71.5 (2.81)	Deep offset cam, reverse	E5-4001

Roller Cam Part Number Table (order separately from latch)			
Minimum Grip	**Maximum Grip**	**Cam Type**	**Part Number**
3.5 (.14)	15 (.59)	Offset cam, forward	E5-4505
7.5 (.30)	19 (.75)	Offset cam, forward	E5-4506
17.5 (.69)	29 (1.14)	Offset cam, forward	E5-4507
27.5 (1.08)	39 (1.54)	Offset cam, forward	E5-4508
37 (1.46)	48.5 (1.91)	Offset cam, reversed	E5-4508
47 (1.85)	58.5 (2.30)	Offset cam, reversed	E5-4507
57 (2.24)	68.5 (2.70)	Offset cam, forward	E5-4506
61 (2.40)	72.5 (2.85	Offset cam, forward	E5-4505

Optional Keeper for Roller Cam

Part number E5-74-601-33
(if selected, add 4 mm to grip calculation)

Dimensions in millimeters (inch) unless otherwise stated

N2 Compression Latch

Lift & turn series · Folding T-handle · Flush cup style · Adjustable grip

- **Heavy-duty performance**
- **Flush profile when latched**
- **Easy grip adjustment**
- **Intuitive operation**

Material and Finish

Black powder coat version:
Handle: Aluminum , Zinc Alloy
Cup and hardware: Steel
Stainless Steel version:
Handle, cup and hardware:
Stainless steel

Performance Details

Maximum static load:
1000 N (225 lbf)
Compression: 6.4 mm (.25 in)

Installation Notes

1. Insert latch and tighten 4 mounting nuts.
2. With latch in closed position, adjust jam nuts to position cam at correct grip.
   Maximum tightening torque:
   20 N•m (177 in·lbf)

Keys

See page 121

Standard Locking Cup Shown

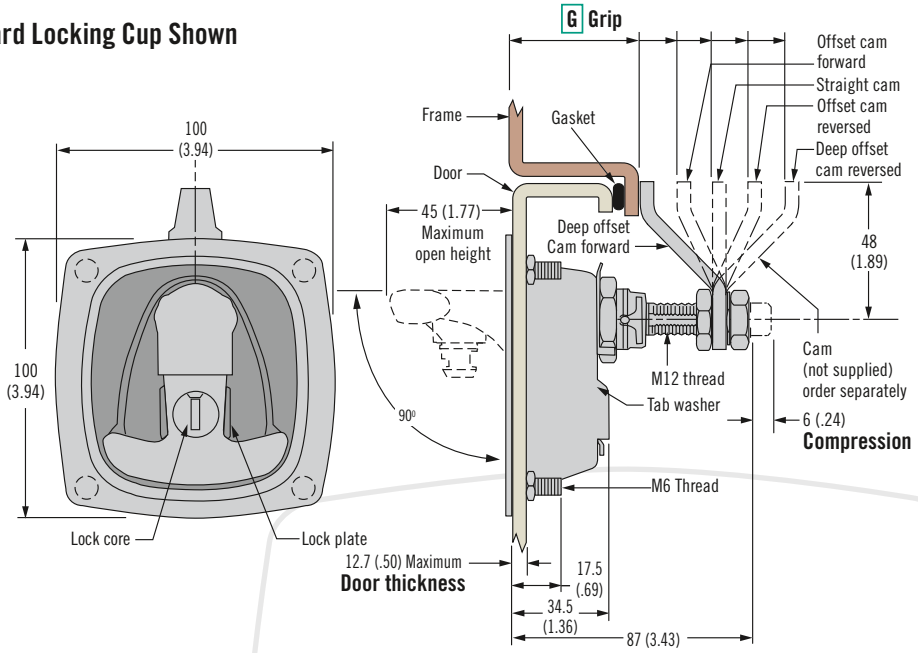

ACTUAL SIZE

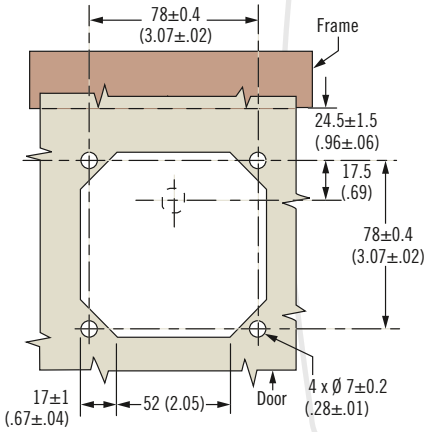

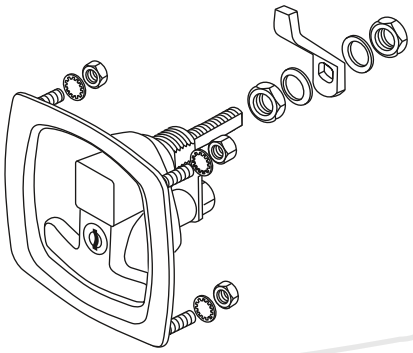

Part Number Selection

See table
For Standard and Medium cup, Order both parts separately

Choose latch body style

Choose cam (see table)

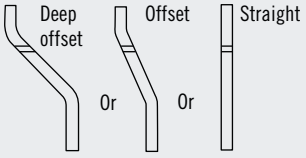

Large cup comes standard with cam part number 62-0-40145

Latch part number (no cam)

N2 - 2 - C 0 L - 01 - F

C Cup style
- **3** Standard cup
- **5** Medium cup
- **7** Large cup

L Locking style
- **0** Non-locking
- **1** Key-locking keyed alike CH751 (2 keys supplied)

F Finish
- **5** Black powder coated
- **20** Polished stainless (Only offered with standard cup style)

Cam Part Number Table (order separately)				
Part Number		G Grip		Cam Type
Steel	Stainless Steel	Minimum	Maximum	
N2-21-101-12	N2-21-101-24	28 (1.10)	43 (1.69)	Deep offset cam, forward
		88 (3.46)	104 (4.09)	Deep offset cam, reversed
N2-21-102-12	N2-21-102-24	43 (1.69)	58 (2.28)	Offset cam, forward
		73 (2.87)	88 (3.46)	Offset cam, reversed
N2-21-103-12	N2-21-103-24	58 (2.28)	73 (2.87)	Straight

Dimensions in millimeters (inch) unless otherwise stated

N2 Compression Latch

Lift & turn series · Folding T-handle · No cup style · Adjustable grip

Locking Shown

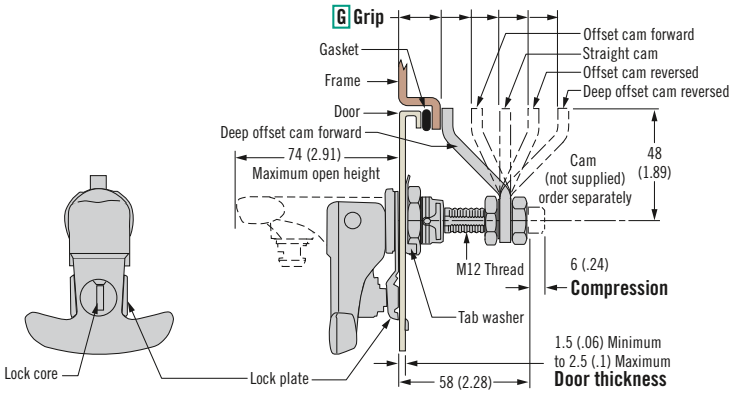

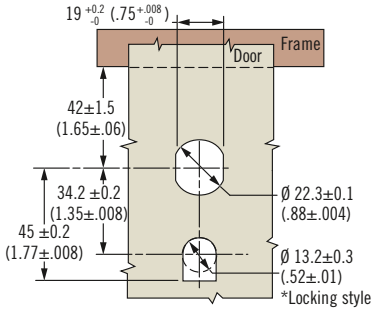

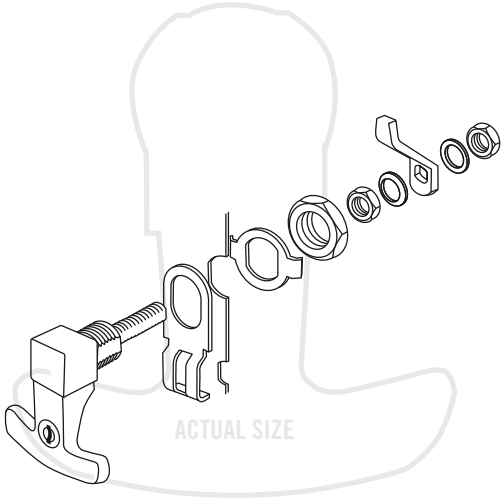

Part Number Selection

See table

F Finish
- **5** Black powder coated
- **20** Polished stainless

L Locking style
- **0** Non-locking
- **1** Key-locking keyed alike CH751 (2 keys supplied)

Latch part number
(no cam)

N2 - 2 - 10 L - 01 - F

Cam Part Number Table (order separately)				
Part Number		G Grip		Cam Type
Steel	Stainless Steel	Minimum	Maximum	
N2-21-101-12	N2-21-101-24	2.5 (.10)	15 (.59)	Deep offset cam, forward
		60 (2.36)	75 (2.95)	Deep offset cam, reversed
N2-21-102-12	N2-21-102-24	15 (.59)	30 (1.18)	Offset cam, forward
		45 (1.77)	60 (2.36)	Offset cam, reversed
N2-21-103-12	N2-21-103-24	30 (1.18)	45 (1.77)	Straight

N2 Product Family

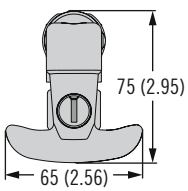

No Cup Style

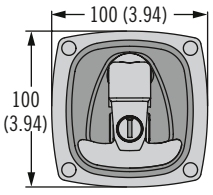

Standard Cup

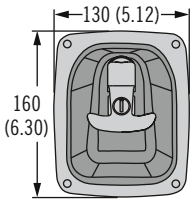

Medium Cup

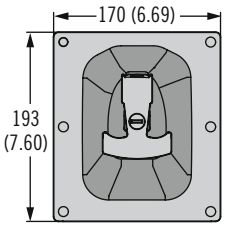

Large Cup

- **Heavy-duty performance**
- **Low profile when latched**
- **Easy grip adjustment**
- **Intuitive operation**

Material and Finish

Black powder coat version:
Handle: Aluminum, Zinc Alloy
Hardware: Steel
Stainless Steel version:
Handle and hardware:
Stainless steel

Performance Details

Maximum static load:
1000 N (225 lbf)
Compression: 6.4 mm (.25 in)

Installation Notes

1. Insert latch and tighten mounting nut.
2. Bend tab washer over mounting nut.
3. With latch in closed position, adjust jam nuts to position cam at correct grip. Maximum tightening torque: 20 N·m (177 in·lbf)

Keys

See page 121

Order both parts separately

Choose latch body style

Choose cam (see table)

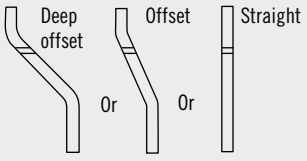

Notes

Other styles available
Custom colors and keycodes
Contact Southco for details

62 Compression Latch

Lift & turn series · Flush style · Adjustable grip

- **Low profile**
- **Easy grip adjustment**
- **Intuitive operation**

Material and Finish

Zinc alloy, powder coated or chrome plated and steel, zinc plated

Performance Details

Maximum static load: 220N (50 lbf)
Compression: 2mm (.08 in)

Sealing Notes

Sealing the mounting screw threads required.

Installation Notes

Screw and lockwasher assembly M4 x 10. For door thickness greater than 3 (.11) calculate screw length using the following formula: Door thickness + 7 (.28)

Add 0.4 (.02) to door thickness when using cup gasket

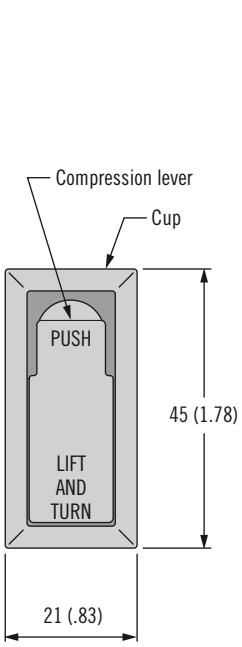

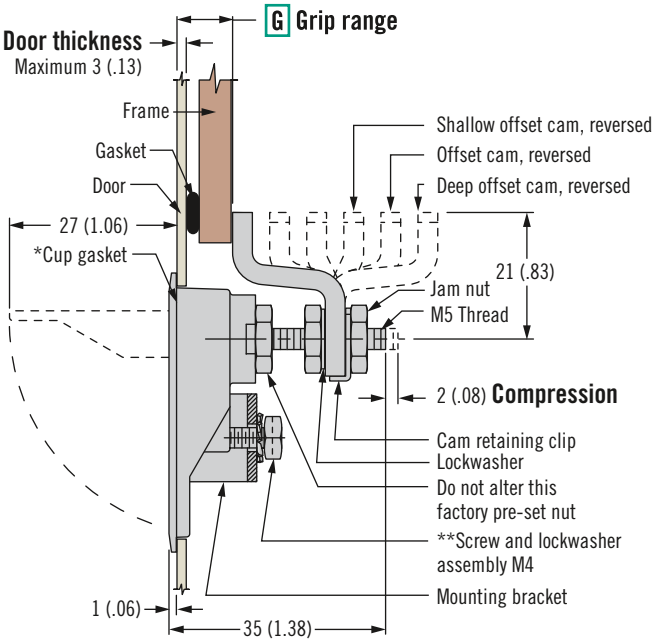

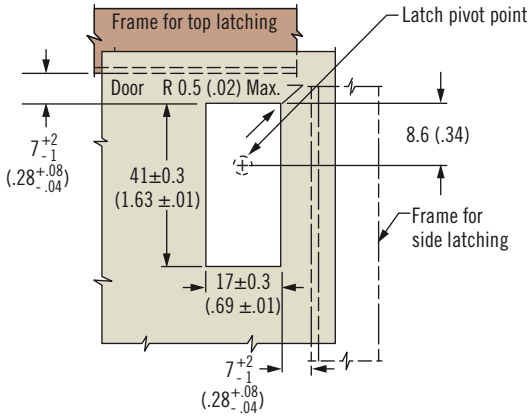

ACTUAL SIZE

Part Number Selection

See table

62 - 7 S - G F

S Sealing option
- **0** No Gasket
- **4** Gasket Included (see sealing and installation notes)

F Finish
- **1** Polished chrome
- **2** Brushed chrome
- **5** Black powder coated

G Grip	Minimum	Maximum	Cam Type
1	4.5 (.17)	10.5 (.41)	Deep offset cam, forward
	34.5 (1.35)	40.5 (1.59)	Deep offset cam, reversed
2	10.5 (.41)	16.5 (.65)	Offset cam forward
	28.5 (1.12)	34.5 (1.35)	Offset cam reverse
3	16.5 (.65)	22.5 (.88)	Shallow offset cam, forward
	22.5 (.88)	28.5 (1.12)	Shallow offset cam, reversed

Dimensions in millimeters (inch) unless otherwise stated

62 Compression Latch

Lift & turn series · Flush style · Adjustable grip

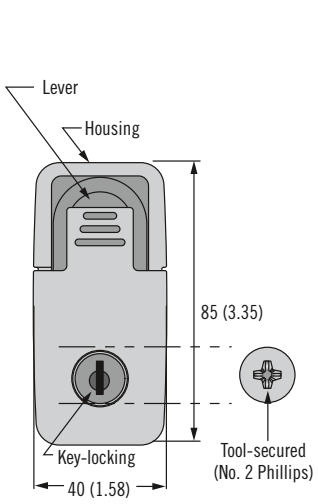

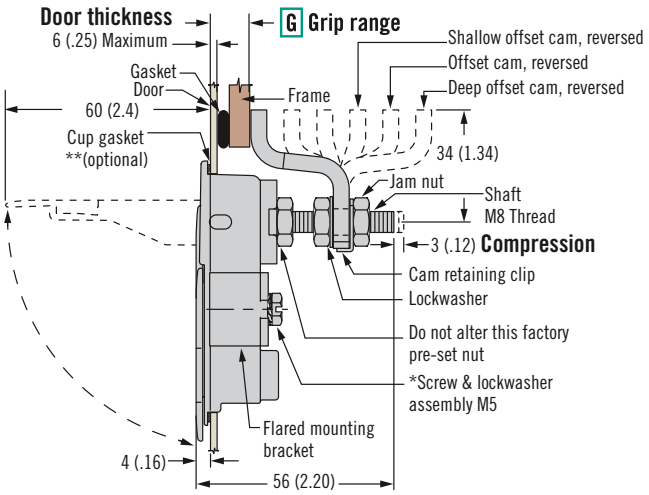

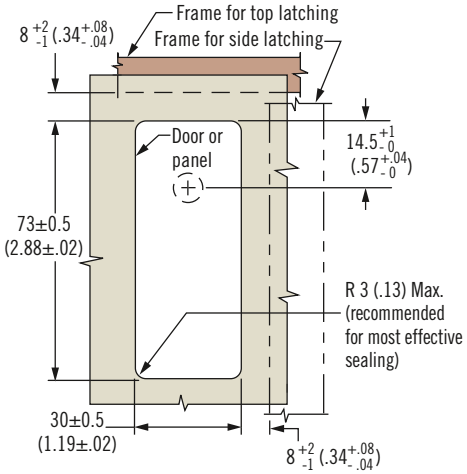

ACTUAL SIZE

- **Low profile**
- **Intuitive operation**

Material and Finish

Zinc alloy, powder coated or chrome plated and steel, zinc plated

Performance Details

Maximum static load: 440 N (100 lbf)
Compression: 3mm (.12 in)

Sealing Notes

Environmental sealing is achieved by using a cup gasket and sealing the mounting screw threads.

Installation Notes

Screw and lockwasher assembly M5 x 16. For door thickness greater than 6 (.25) calculate screw length using the following formula:
Door thickness + 10 (.39)

Add 0.4 (.02) to door thickness when using cup gasket

Accessories

Cup gasket:
Part number: 62-973-431

Keys

PK-10-01
See page 121

Notes

For lock core selection and a complete overview of the *SOUTHCO*® Key-Choice System see page 190

Part Number Selection

See table

62 - 4 L - G F 1 - P

L Lock style
- **0** Non-locking
- **2** Key-locking without dust shutter keyed alike CH751
- **3** Tool secured No. 2 Phillips
- **20** 4 mm Hex Recess
- **21** Locking without lock core (order separately see page 190)

P Packaging option
- **3** Layer packed
- **2** Individually packed

F Finish
- **0** Textured chrome
- **1** Polished chrome
- **5** Black powder coated

G Grip	Minimum	Maximum	Cam Type
1	6 (.23)	16 (.63)	Deep offset cam, forward
	56 (2.20)	66 (2.59)	Deep offset cam, reversed
2	16 (.63)	26 (1.02)	Offset cam forward
	46 (1.81)	56 (2.20)	Offset cam reverse
3	26 (1.02)	36 (1.41)	Shallow offset cam, forward
	36 (1.41)	46 (1.81)	Shallow offset cam, reversed

62 Compression Latch

Lift & turn series · Flush style · Adjustable grip

- **Low profile when latched**
- **Easy grip adjustment**
- **Intuitive operation**

Material and Finish

Zinc alloy, chrome brushed and steel, zinc plated

Performance Details

Maximum static load: 1250 N (280 lbf)
Compression: 5.5 mm (.22 in)

Installation Notes

*Screw and lockwasher assembly 5/16-18UNC x 3/4.
For door thickness greater than 6 (.25) calculate screw length using the following formula:
Door thickness + 7 (.28)

Accessories

Actuator for three point locking assembly (order separately)
Part number: 62-19-501-15

Keys

See page 121

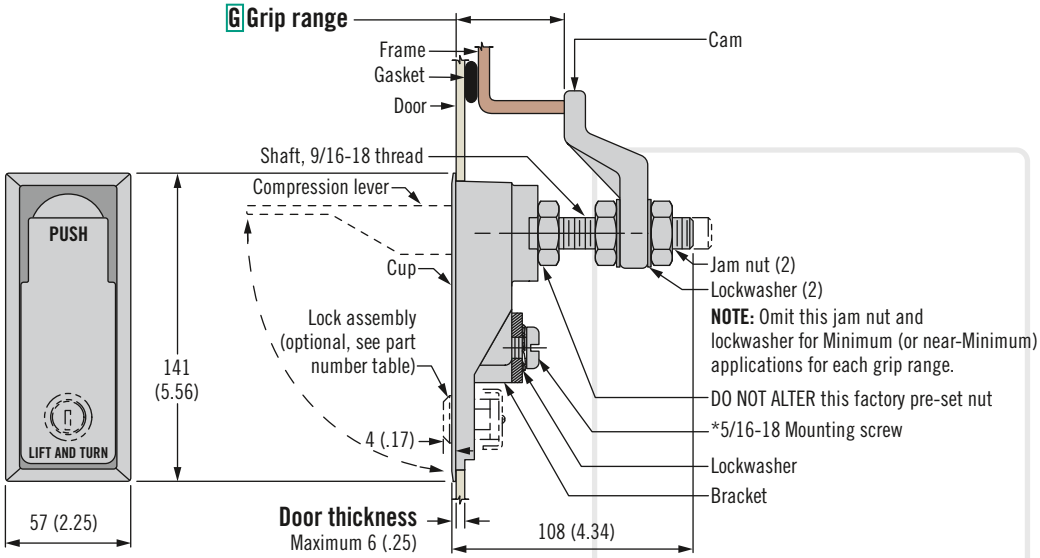

ACTUAL SIZE

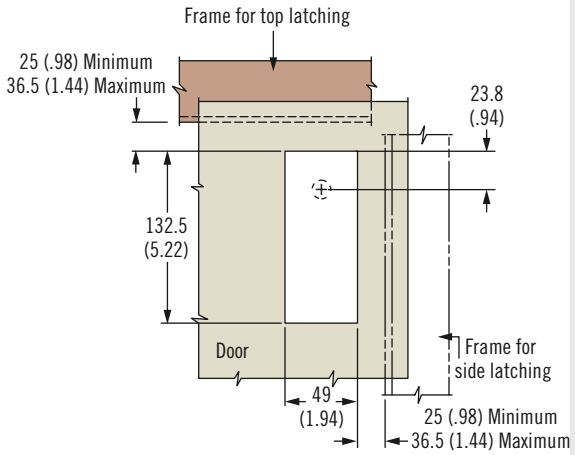

Part Number Selection

See table

H Head style
0 Non-locking
1 Key-locking keyed alike CH751 (two flat keys supplied)

62 - 10 - 8 H 1 - 20

Dimensions in millimeters (inch) unless otherwise stated

62 Compression Latch

Lift & turn series · Handle style · Adjustable grip

- **Easy grip adjustment**
- **Intuitive operation**

Material and Finish

Zinc alloy, powder coated or chrome plated and steel, zinc plated

Performance Details

Maximum static load: 220 N (50 lbf)
Compression: 3 mm (.11 in)

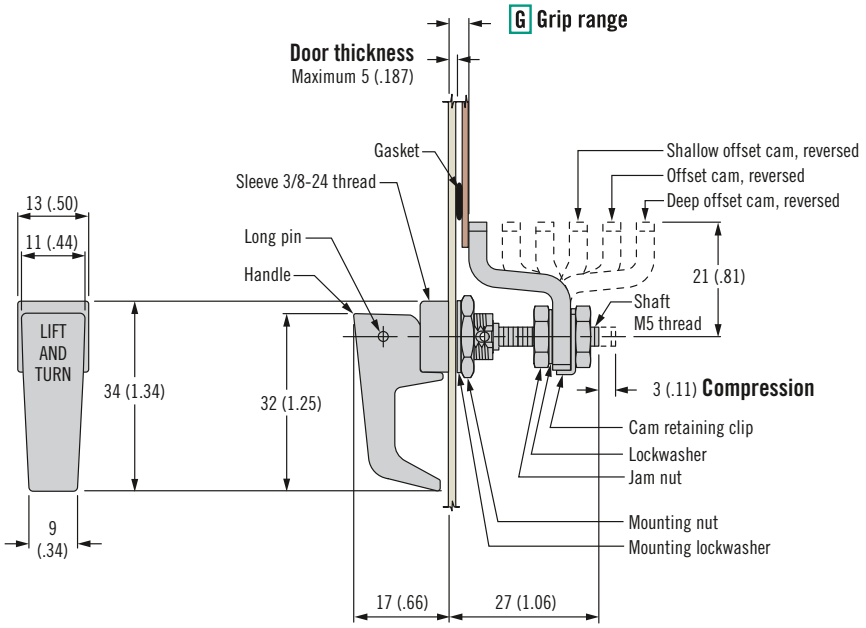

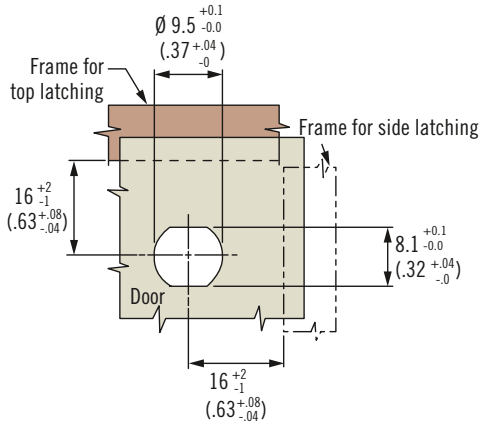

Part Number Selection

See table

62 - 20 - G F

F Finish

1 Polished chrome
5 Black powder coated

G Grip	Minimum	Maximum	Cam Type
1	0 (0)	4 (.16)	Deep offset cam, forward
	28 (1.10)	34 (1.34)	Deep offset cam, reversed
2	4 (.16)	10 (.39)	Offset cam, forward
	22 (.87)	28 (1.10)	Offset cam, reverse
3	10 (.39)	16 (.63)	Shallow offset cam, forward
	16 (.63)	22 (.87)	Shallow offset cam, reversed

62 Compression Latch

Lift & turn series · Handle style · Adjustable grip

- **Easy grip adjustment**
- **Intuitive operation**

Material and Finish

Zinc alloy, powder coated or chrome plated and steel, zinc plated

Performance Details

Maximum static load: 550 N (125 lbf)
Compression: 5 mm (.19 in)

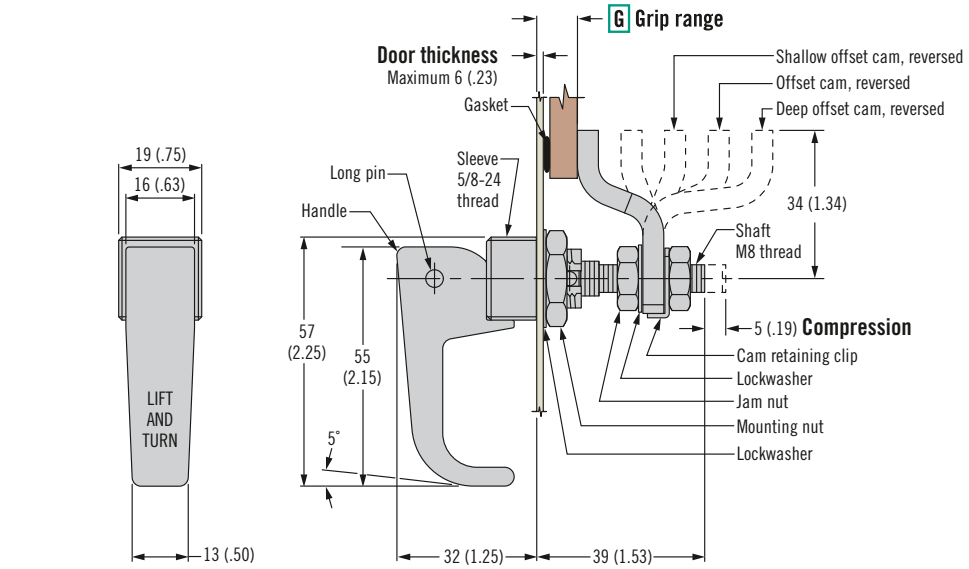

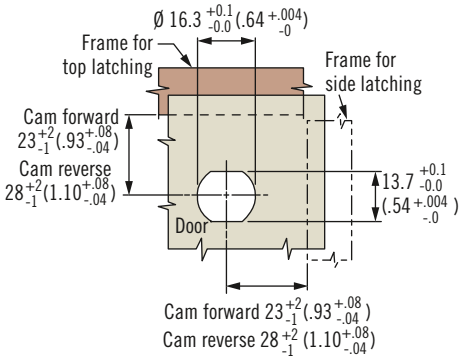

Part Number Selection

See table

62 - 10 - G F

F Finish
1 Polished chrome
2 Brushed chrome
3 Natural with chemical protective film
5 Black powder coated

G Grip	Minimum	Maximum	Cam Type
1	42 (1.66)	52 (2.05)	Deep offset cam, reversed
2	2 (.08)	12 (.47)	Offset cam, forward
	32 (1.25)	42 (1.66)	Offset cam, reversed
3	12 (.47)	22 (.87)	Shallow offset cam, forward
	22 (.87)	32 (1.25)	Shallow offset cam, reversed

Dimensions in millimeters (inch) unless otherwise stated

62 Compression Latch

Lift & turn series · Handle style · Adjustable grip

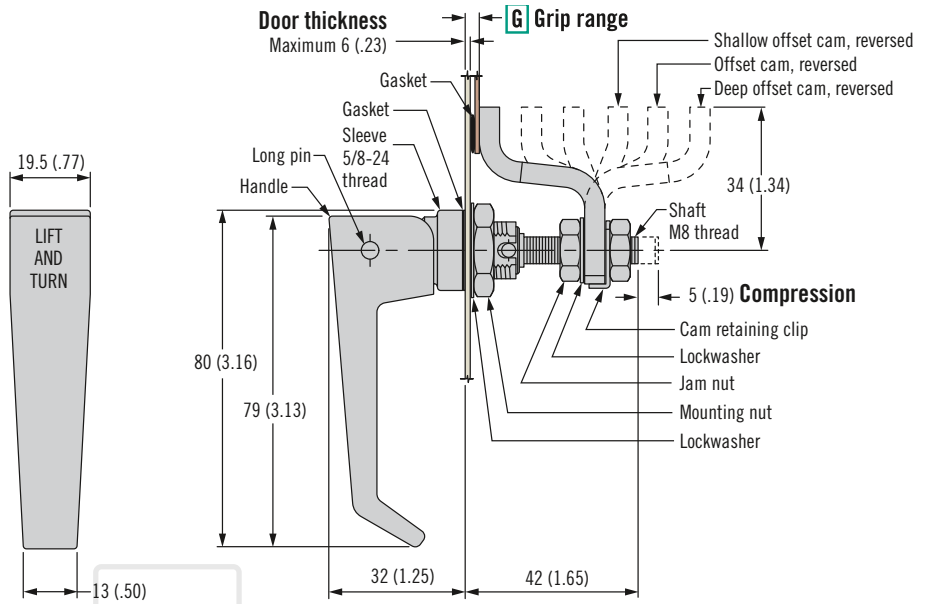

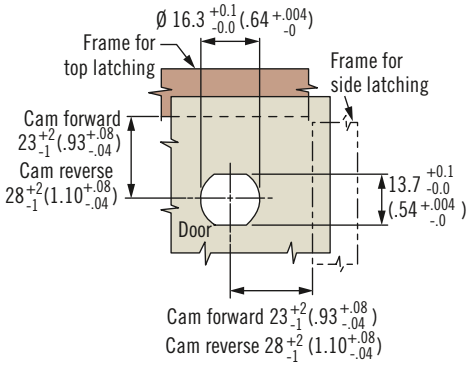

- **Easy grip adjustment**
- **Intuitive operation**

Material and Finish

Zinc alloy, powder coated or chrome plated and steel, zinc plated

Performance Details

Maximum static load: 670 N (150 lbf)
Compression: 5 mm (.19 in)

Notes

Larger sizes available, visit www.southco.com/62

Part Number Selection

See table

62 - 30 - G F

F Finish
1 Polished chrome
2 Brushed chrome
5 Black powder coated

G Grip	Minimum	Maximum	Cam Type
1	0 (0)	5 (.20)	Deep offset cam, forward
	45 (1.77)	55 (2.16)	Deep offset cam, reversed
2	5 (.20)	15 (.59)	Offset cam, forward
	35 (1.37)	45 (1.77)	Offset cam, reversed
3	15 (.59)	25 (.98)	Shallow forward
	25 (.98)	35 (1.37)	Shallow reversed

M1 20 Series Compression Latch

Cast 316 stainless steel · Lift & turn · Adjustable grip
50mm (2") size

- **Consistent pre-set compression**
- **Easy grip adjustment**
- **Flush round hole install**

Material and Finish
Cast 316 grade stainless steel

Performance Details
Short cam
Maximum static load:
460 N (103 lbf)

Long cam
Maximum static load: 350 N (78 lbf)

Sealing Notes
NEMA 4 / IP66 sealing is achieved by using supplied flange gasket

Keys
Lock style 8
Part number: M1-546

Lock style 9

Part number: M1-525-39-S008

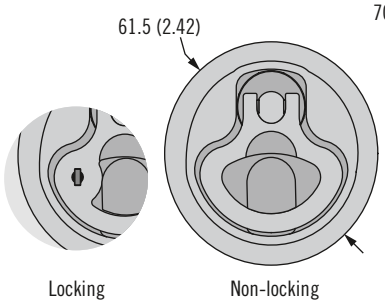

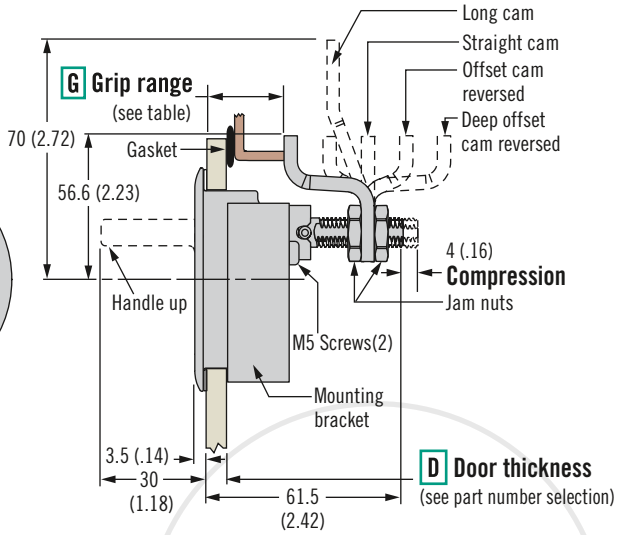

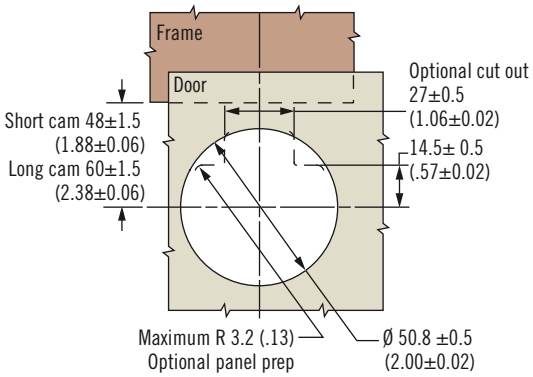

ACTUAL SIZE

Part Number Selection
See table

See page 257 for complimentary styled push to close version

L Lock style
- **3** Non-locking
- **8** Locking (2 keys supplied)
- **9** Key-locking keyed alike S008 (2 overmolded keys supplied)

M1 - 20 - L D - G 8

D	Door Thickness	Grip Adjustment Value
1	2 - 12 (.075 - .475)	19 (.75)
2	12 - 22.5 (.475 - .885)	9 (.35)
3	18.5 - 29 (.73 - 1.14)	2.5 (.10)

G Grip Range		
Short cam		
5	21 - 28 (.83 - 1.10)	Deep offset forward
4	27 - 40 (1.06 - 1.57)	Offset forward
3	39 - 52 (2.01 - 2.52)	Straight
4	51 - 64 (2.01 - 2.52)	Offset reversed
5	63 - 76 (2.48 - 3.00)	Deep offset reversed
Long cam		
8	21 - 28 (.83 - 1.10)	Deep offset forward
7	27 - 40 (1.06 - 1.57)	Offset forward
6	39 - 52 (2.01 - 2.52)	Straight
7	51 - 64 (2.01 - 2.52)	Offset reversed
8	63 - 76 (2.48 - 3.00)	Deep offset reversed

Note
All grips of 35 (1.38) or below, highlighted in ▭, in the table above, are potentially a function of door thickness and may not always be achievable, depending on actual door thickness used. In this range of grips, the minimum achievable grip will be limited to actual door thickness + grip adjustment value, or the minimum values shown in the table, whichever is greater.

Examples:
For a door thickness of 4mm, the minimum achievable grip is 23 and is achieved with a deep offset cam in the forward position. (4 + 19 = 23)

For a door thickness of 20mm, the minimum achievable grip is 29 and is achieved with an offset cam in the forward position. (20 + 9 = 29)

Dimensions in millimeters (inch) unless otherwise stated

M1 25 Series Compression Latch

Cast 316 stainless steel · Lift & turn · Adjustable grip
64mm (2.5") size

- **Consistent pre-set compression**
- **Easy grip adjustment**

Material and Finish

Stainless steel cast 316 grade

Performance Details

Short cam
Maximum static load:
1010 N (227 lbf)

Long cam
Maximum static load: 350 N (78 lbf)

Sealing Notes

NEMA 4 / IP66 sealing is achieved by using supplied flange gasket

Keys

Lock style 8
Part number: M1-546

Lock style 9
Part number: M1-525-39-S008

Part Number Selection

See table

See page 258 for complimentary styled push to close version

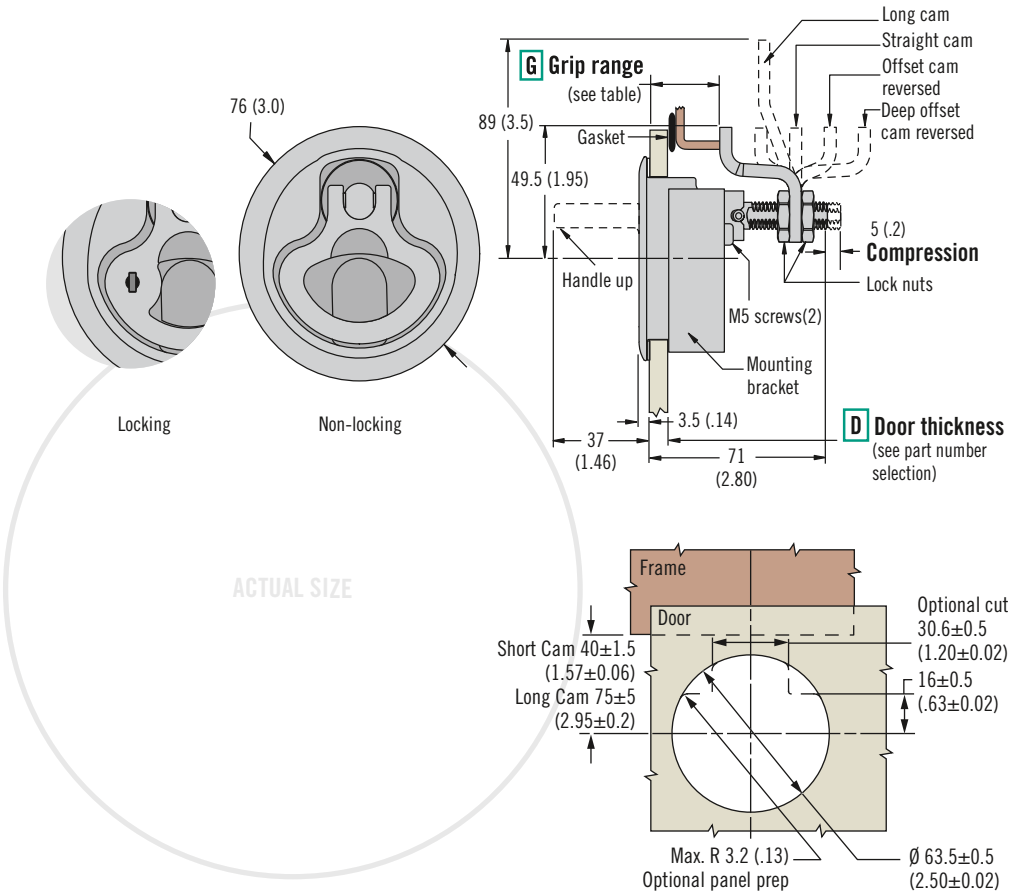

L Lock style

3 Non-locking
8 Locking (2 keys supplied)
9 Key-locking keyed alike S008 (2 overmolded keys supplied)

M1 - 25 - L D - G 8

D	Door Thickness	Grip Adjustment Value
1	2 - 12 (.075 - .475)	21.5 (.85)
2	12 - 22.5 (.475 - .885)	11.5 (.45)
3	18.5 - 29 (.73 - 1.14)	4 (.12)

G Grip Range		
Short cam		
5	23.5 - 35 (.92 - 1.38)	Deep offset forward
4	34 - 48 (1.34 - 1.89)	Offset forward
3	47 - 61 (1.85 - 2.40)	Straight
4	60 - 75 (2.36 - 2.95)	Offset reversed
5	74 - 88 (2.91 - 3.47)	Deep offset reversed
Long cam		
8	23.5 - 35 (.92 - 1.38)	Deep offset forward
7	34 - 48 (1.34 - 1.89)	Offset forward
6	47 - 61 (1.85 - 2.40)	Straight
7	60 - 75 (2.36 - 2.95)	Offset reversed
8	74 - 88 (2.91 - 3.47)	Deep offset reversed

Note

All grips of 33.5 (1.32) or below, highlighted in ▭, in the table above, are potentially a function of door thickness and may not always be achievable, depending on actual door thickness used. In this range of grips, the minimum achievable grip will be limited to actual door thickness + grip adjustment value, or the minimum values shown in the table, whichever is greater.

Examples:

For a door thickness of 4mm, the minimum achievable grip is 25.5 and is achieved with a deep offset cam in the forward position. (4 + 21.5 = 25.5)

For a door thickness of 20mm, the minimum achievable grip is 31.5 and is achieved with a deep offset cam in the forward position. (20 + 11.5 = 31.5)

C5 Compression Latch

Sealed lever latch

90mm size

- **Low profile when latched**
- **Easy grip adjustment**
- **Push button actuation**

Material and Finish

Zinc alloy, black powder coated

Performance Details

Maximum static load:
445 N (100 lbf)

Sealing Notes

NEMA 4 / IP65 sealing is achieved by using optional flange gasket and sealing the mounting screw threads

Accessories

Dust cover:
Part number: C5-0-34682
(add 2.2 (.086) to door thickness)

Flange Gasket:
Part number: C5-82
(add 0.8 (0.03) to door thickness)

Rubber Bumper:
Part Number: C5-25-301-82

Keys

See page 121

Part Number Selection

See table

Notes

For lock core selection and a complete overview of the *SOUTHCO*® Key-Choice System see page 190

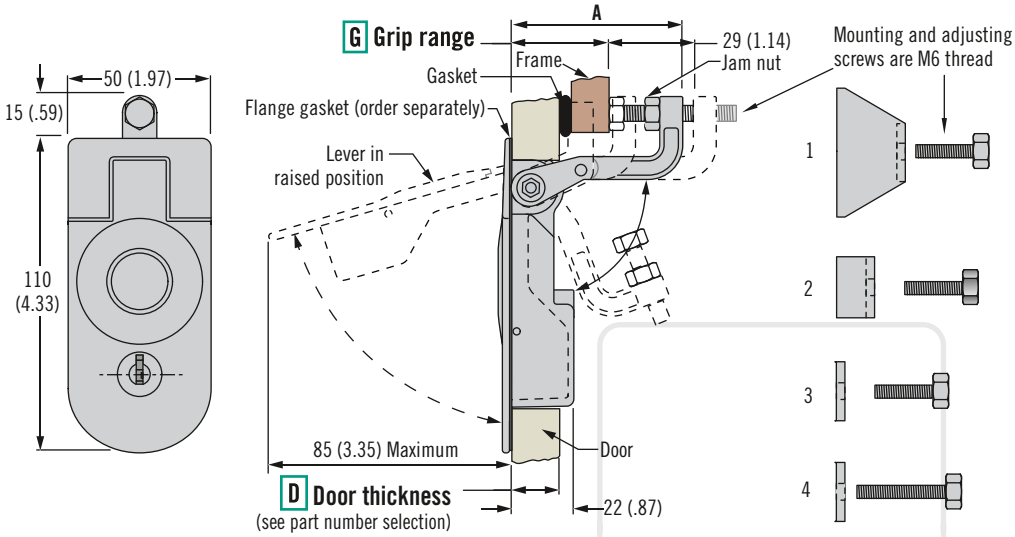

Brackets to Suit Door Thickness

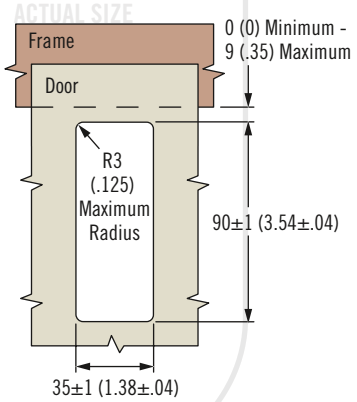

L Lock styles

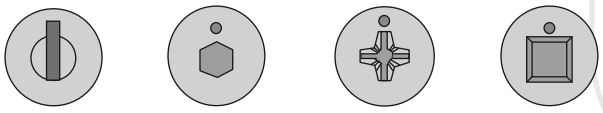

Key-locking keyed CH751 | 4 (.16) Hex recess | No. 2 Phillips recess | Railway Standard

L Lock style
1 Non-locking
2 Locking without dust shutter, keyed alike CH751 (two flat keys supplied)
3 Locking with dust shutter, keyed alike CH751 (two flat keys supplied)
4 4 (.16) Hex recess
5 No. 2 Phillips recess
6 Railway standard
9 Locking without lock core (order separately see page 190)

C5 - L D - G 5 - P

D Door thickness
1 1 - 11 (.04 - .43)
2 11 - 21 (.43 - .83)
3 21 - 31 (.83 - 1.22)
4 31 - 41 (1.22 - 1.61)

P Packaging option
3 Layer packed (omit for individually packaged latches)

G Grip Range			A
1	1 - 14 (.04 - .55)	Door thickness option 1 and 2 only	29 (1.14)
2	14 - 29 (.55 - 1.14)	Door thickness option 1, 2 and 3 only	44 (1.73)
3	29 - 45 (1.14 - 1.77)		60 (2.36)
4	45 - 57 (1.77 - 2.25)		72 (2.84)

Dimensions in millimeters (inch) unless otherwise stated

C5 Compression Latch

Sealed lever latch
71mm size

- **Low profile when latched**
- **Easy grip adjustment**
- **Push button actuation**

Material and Finish

Zinc alloy, powder coated and steel, zinc plated

Performance Details

Maximum static load:
Grip 1 - 25 (.04 - .98):
290 N (65 lbf)
Grip 15 - 30 (.59 - 1.18):
170 N (40 lbf)

Sealing Notes

Environmental sealing is achieved by sealing the mounting screw threads

Keys

See page 121

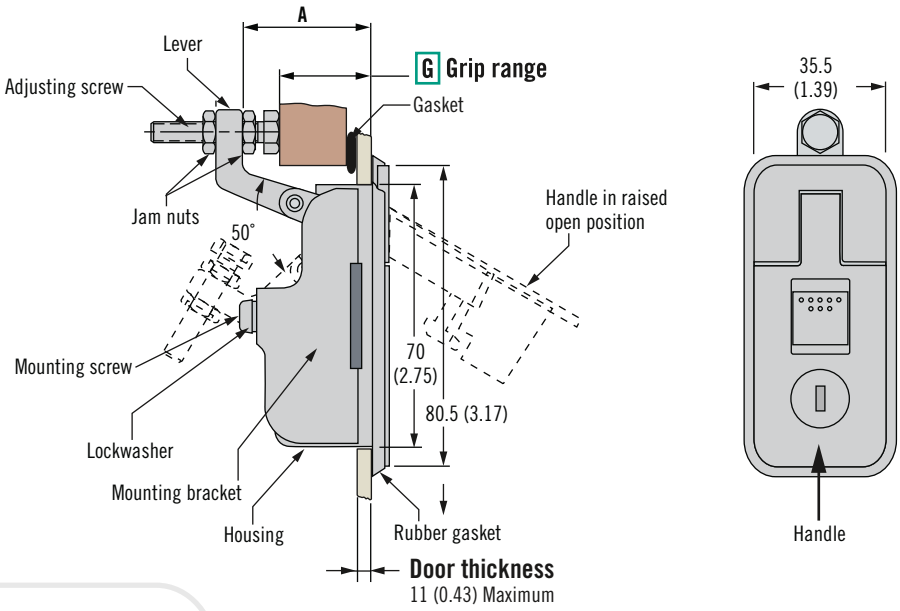

ACTUAL SIZE

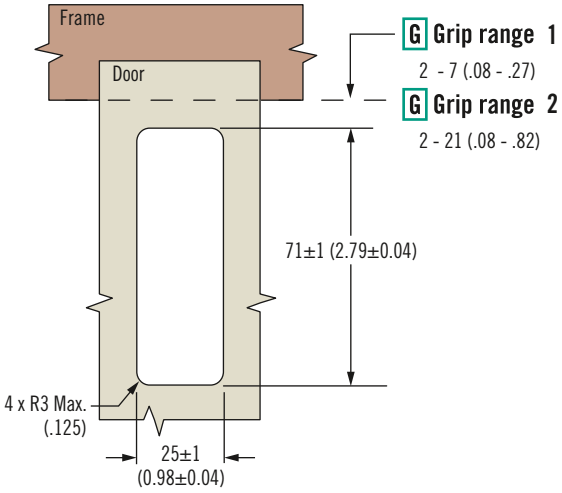

Part Number Selection

See table

C5 - M - L 1 - G F

F Finish
5 Black powder coated
12 Chrome plated

L Lock style
1 Non-locking
3 Key-locking with dust shutter, keyed alike CH751 (two flat keys supplied)

	G Grip Range	A
1	1 - 25 (.04 - .98)	36.5 (1.44)
2	15 - 30 (.59 - 1.18)	40.0 (1.57)

C2 Compression Latch

Lever latch

- **Low profile when latched**
- **Easy grip adjustment**
- **Push button actuation**
- **Optional Sealing**

Material and Finish

Zinc alloy, powder coated or chrome plated and steel, zinc plated

Performance Details

Maximum static load: 200 N (45 lbf)

Sealing Notes

For sealed option, NEMA 4 / IP65 sealing is achieved by using the supplied flange gasket.

Installation Notes

* For door thickness greater than 5 (.20) calculate screw length using the following formula:
Door thickness + 12 (.47)

Accessories

Rubber Bumper:
Part Number: C2-25-301-82
(reduces min. and max. grip by 1.6 (0.06))

Keys

See page 121

Part Number Selection

See table

Notes

For lock core selection and a complete overview of the *SOUTHCO*® Key-Choice System see page 190

C2 Non-Sealed

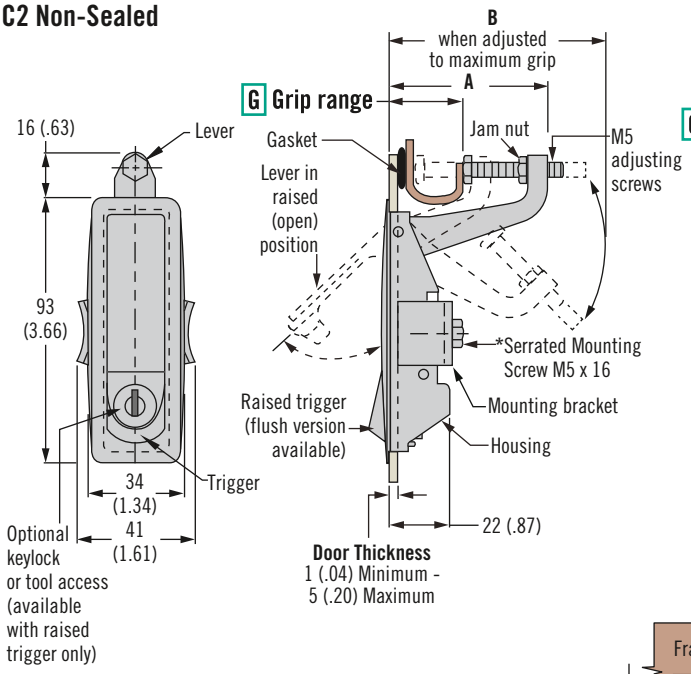

C2 Sealed

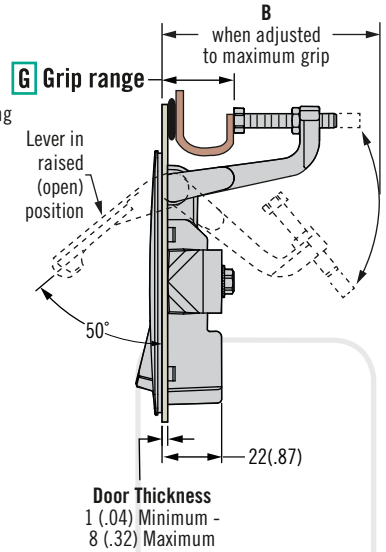

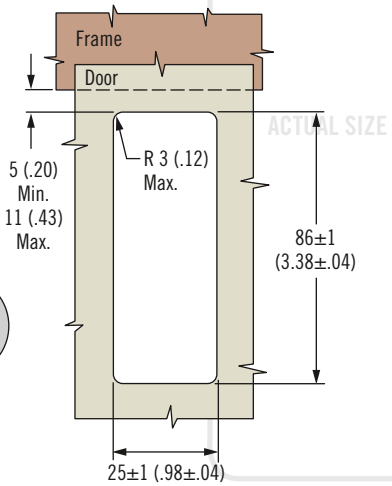

L Lock Styles

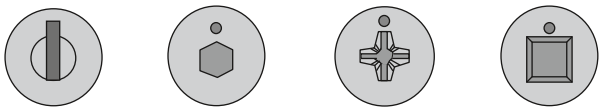

Key-locking keyed CH751 | 4 (.16) Hex recess | No. 2 Phillips recess | Railway standard

Part Number Selection

L Lock style
- **1** Non-locking raised trigger
- **2** Key-locking raised trigger keyed CH751 (two flat keys supplied)
- **3** Non-locking flush trigger
- **4** 4 (.16) Hex recess raised trigger
- **10** No. 2 Phillips recess raised trigger
- **13** Locking without lock core raised trigger (see page 190 for lock core options)
- **14** Railway standard raised trigger

S Sealing Option
- **3** Non-sealed
- **4** Sealed

C2 - S G - L F - P

F Finish
- **1** Textured chrome
- **5** Black powder coated

P Packaging option
- **3** Layer packed (omit for individually packaged latches)

G Grip Range		A	B
2	1 - 24 (.04 - .95)	35 (1.38)	63 (2.48)
3	23 - 46 (.91 - 1.81)	57 (2.24)	84 (3.31)

Dimensions in millimeters (inch) unless otherwise stated

southco®

C2 Compression Latch

Lever latch · Access indicator of latch access

Visual Indicator

Green – Unaccessed
Red – Accessed (Operated)

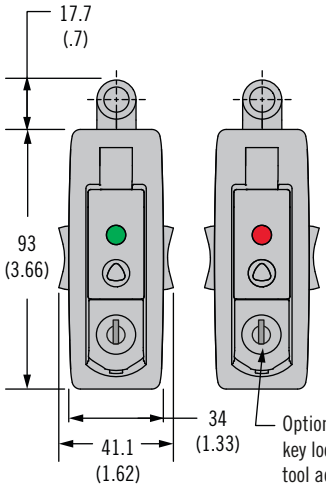

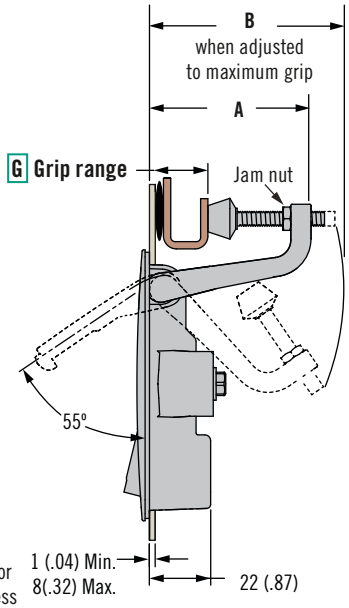

Panel Preparation

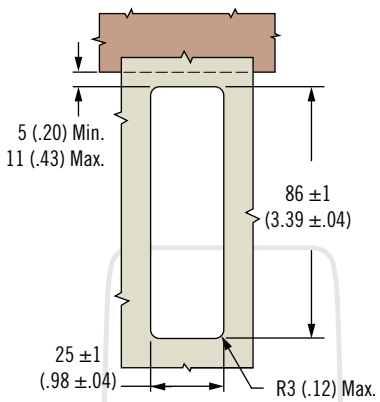

ACTUAL SIZE

L Lock Styles

Key-locking keyed CH751 | 4 (.16) Hex recess | No. 2 Phillips recess | Railway standard | Slotted recess

- **Feature indicates that latch has been accessed**
- **Easy grip adjustment**
- **Push button actuation**
- **Integrated bumper screw**

Material and Finish

Zinc alloy, powder coated or chrome plated and steel, zinc plated

Performance Details

Maximum static load: 200 N (45 lbf)

Sealing Notes

NEMA 4 and IP65 enabled using supplied gasket.

Installation Notes

* For door thickness greater than 5 (.20) calculate screw length using the following formula:
Door thickness + 12 (.47)

Keys

See page 121

Indicator Reset Key

Part number: C2-26-301-05
Required to reset red indicator back to green

Part Number Selection

See table

L Lock style
1 Non-locking raised trigger
2 Key-locking raised trigger keyed CH751 (two flat keys supplied)
3 Non-locking flush trigger
4 4 (.16) Hex recess raised trigger
10 No. 2 Phillips recess raised trigger
13 Locking without lock core raised trigger (see page 190 for lock core options)
14 Railway standard raised trigger
16 Slotted recess raised trigger

C2 - A4 G - L F - P

F Finish
1 Textured chrome
5 Black powder coated

P Packaging option
3 Layer packed (omit for individually packaged latches)

G Grip Range		A	B
2	1 - 18 (.04 - .71)	35 (1.38)	65 (2.56)
3	17 - 39 (.67 - 1.53)	57 (2.24)	85 (3.35)

Notes

For lock core selection and a complete overview of the *SOUTHCO*® Key-Choice System see page 190

Make Safety Visible™
by Southco

C2 Compression Latch

Lever latch · Push to lock

- **Low profile when latched**
- **Easy grip adjustment**
- **Push button actuation**
- **Integrated bumper**

Material and Finish

Zinc alloy, powder coated or chrome plated and steel, zinc plated

Performance Details

Maximum static load: 200 N (45 lbf)

Installation Notes

* Serrated Mounting Screw M5 x 16. For door thickness greater than 5 (.20) calculate screw length using the following formula: Door thickness + 12 (.47)

Keys

See page 121

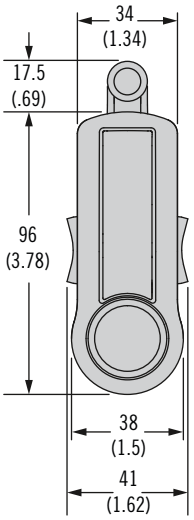

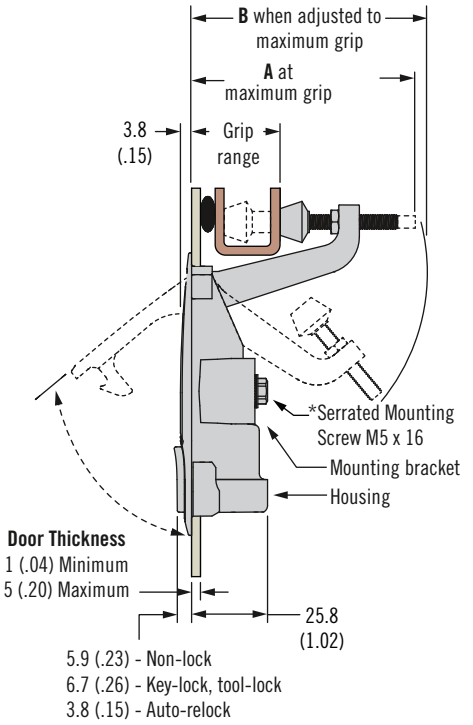

Panel Preparation

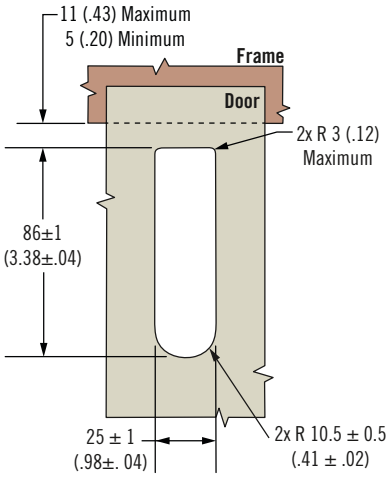

L Lock Styles

Key-locking keyed CH751 | 4 (.16) Hex recess | No. 2 Phillips recess | Railway standard | Slotted recess

Part Number Selection

See table

L Lock style

- **1** Non-locking raised trigger
- **2** Key-locking raised trigger keyed CH751 (two flat keys supplied)
- **4** 4 (.16) Hex recess raised trigger
- **10** No. 2 Phillips recess raised trigger
- **13** Locking without lock core raised trigger (see page 190 for lock core options)
- **14** Railway standard raised trigger
- **15** 8 (.32) Hex recess raised trigger
- **16** Slotted recess raised trigger
- **22** Key-locking raised trigger keyed CH751 (two flat keys supplied); (key retained in unlocked position)
- **34** Auto relock: 4 (.16) Hex recess flush trigger
- **310** Auto relock: No. 2 Phillips recess flush trigger
- **314** Auto relock: Railway standard flush trigger
- **315** Auto relock: 8 (.32) Hex recess flush trigger
- **316** Auto relock: Slotted recess flush trigger

F Finish

- **1** Bright chrome
- **5** Black powder coated

P Packaging option

- **3** Layer packed (omit for individually packaged latches)

C2 - 5 G - L F - P

G Grip Range		A	B
2	1-18 (.04-.71)	35 (1.38)	63 (2.48)
3	18-40 (.71-1.57)	57 (2.24)	84 (3.31)

Notes

For lock core selection and a complete overview of the *SOUTHCO*® Key-Choice System see page 190

Dimensions in millimeters (inch) unless otherwise stated

southco®

A7 Compression Latch

Lever latch · Over-center action

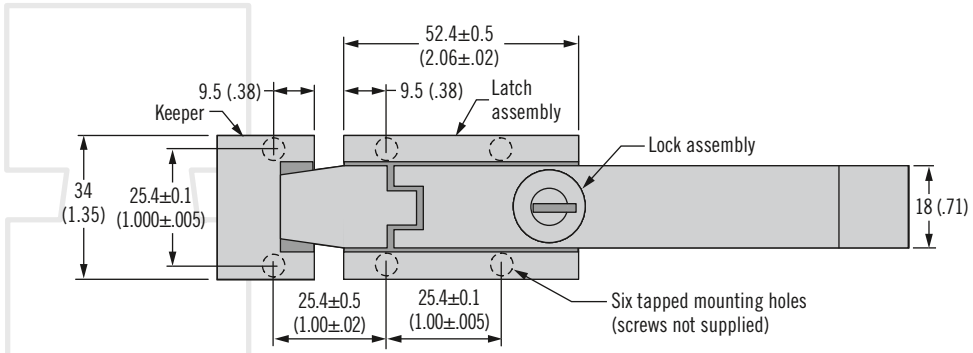

ACTUAL SIZE

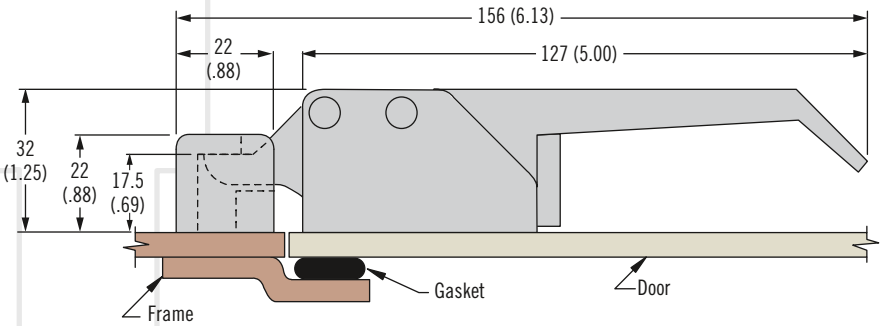

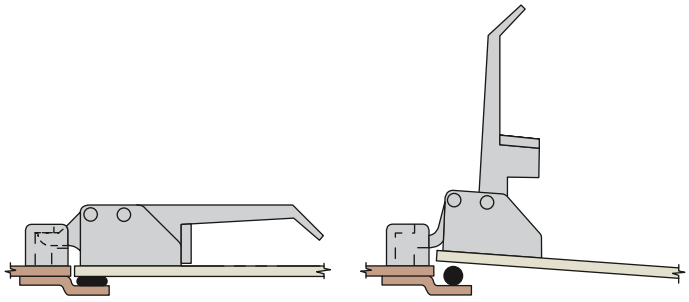

Latched 9.5 (.38) **compression**

Mechanical ejection 7.9 (.31)

- **Intuitive operation**
- **Built in leverage helps open stuck doors**
- **Consistent gasket compression**

Material and Finish

Zinc alloy, powder coated or chrome plated and steel, zinc plated

Performance Details

Maximum static load:
2200 N (500 lbf)

Keys

PK-10-01
See page 121

Part Number Selection

See table

L **Lock Style**
1 Non-locking
2 Key-locking keyed alike CH751
(two flat keys supplied)

F **Finish**
20 Black powder coated
30 Chrome plated
75 Satin silver coated

A7 - 10 - 3 T L - F

T **Tapped mounting**
0 Tapped mounting hole 10-32UNC x .38" deep
5 Tapped mounting hole M5 x 0.8 x 9.5mm deep

27 · 48 Compression Latches

Self-adjusting · Single hole mount

- **Two sizes available**
- **Easy grip adjustment**
- **Multiple head styles**

Material and Finish

Steel, zinc plated or stainless steel

Performance Details

Maximum static load:

27 (Miniature series): 155 N (35 lbf)

48 (Small series): 220N (50 lbf)

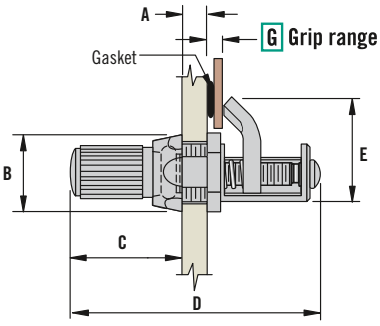

Size	A	B	C	D	E
27 Series Miniature	4.8 (.19) Maximum	10.3 (.41) Maximum	17.5 (.69) Maximum	31.8 (1.25)	13.9 (.55)
48 Series Small	4.8 (.19) Maximum	21 (.81) Maximum	19 (.75) Maximum	44 (1.73)	25.3 (.99)

Nylon knob

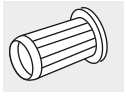

Knurled

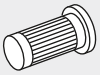

Slotted

Hex recess

Phillips recess

27 Series · Miniature

Material	G Grip Range		Knurled	Slotted	Hex Recess	Nylon Knob
	Minimum	Maximum				
Steel	0.8 (.03)	7.1 (.28)	27-99-123-10 *	27-10-501-10 *	27-10-701-10 *	27-10-311-10 *
Stainless steel	0.8 (.03)	7.1 (.28)	27-99-123-20 *	27-10-501-20 *	27-10-701-20 *	27-10-311-20 *

* all part numbers shown are for clockwise rotation. For specification and ordering details visit: www.southco.com

48 Series · Small

Material	G Grip Range		Nylon Knob	Slotted	Hex Recess	Phillips Recess
	Minimum	Maximum				
Steel	2.4 (.09)	9.5 (.38)	48-10-401-10	48-11-R	48-81-R	48-91-R
Steel	8.7 (.34)	15.9 (.63)	48-10-402-10	48-12-R	48-82-R	48-92-R
Steel	15.1 (.59)	22.2 (.88)	48-10-403-10	48-13-R	48-83-R	48-93-R

For specification and ordering details visit: www.southco.com

www.southco.com/27
www.southco.com/48

Dimensions in millimeters (inch) unless otherwise stated

43 · 44 · 14 Compression Latches

Self-adjusting · Three hole mount

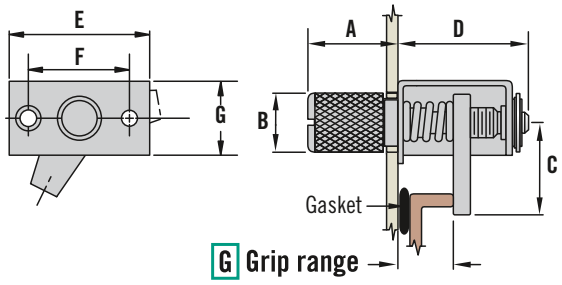

- **Three sizes available**
- **Three hole installation**
- **Easy grip adjustment**

Material and Finish

Steel, zinc plated or stainless steel

Performance Details

Maximum static load:

43 (Small): 330 N (75 lbf)

44 (Medium): 490 N (110 lbf)

14 (Large): 670 N (150 lbf)

Size	A	B	C	D	E	F	G
43 Small	15.1 (.59)	8.9 (.35)	15.9 (.63)	22.2 (.88)	28.6 (1.13)	20.6 (.81)	13.9 (.55)
44 Medium	23.8 (.94)	14.6 (.57)	25.4 (1.0)	32.1 (1.27)	44.5 (1.75)	31.8 (1.25)	22.2 (.88)
14 Large	28.6 (1.13)	22.7 (.90)	34 (1.34)	44.5 (1.75)	63.5 (2.5)	47.6 (1.87)	33.3 (1.31)

43 · Small size series

Material	G Grip Range		Knurled Head	Slotted Head
	Minimum	Maximum		
Steel	3.2 (.12)	7.1 (.28)	43-1-4-0	43-1-13-0
	6.4 (.25)	13.5 (.53)	43-1-5-0	43-1-14-0
	12.7 (.50)	19.8 (.78)	43-1-6-0	43-1-15-0

44 · Medium size series

Material	G Grip Range		Knurled Head	Slotted Head
	Minimum	Maximum		
Steel	3.2 (.12)	9.5 (.37)	44-1-1-0	44-1-16-0
	9.5 (.37)	19.1 (.75)	44-1-2-0	44-1-17-0
	19.1 (.75)	28.6 (1.12)	44-1-3-0	44-1-18-0
Stainless steel	3.2 (.12)	9.5 (.37)	44-1-1-24	44-1-16-24
	9.5 (.37)	19.1 (.75)	44-1-2-24	44-1-17-24
	19.1 (.75)	28.6 (1.12)	44-1-3-24	44-1-18-24

Also available: Tool recess, Slotted, Hex recess

14 · Large size series

Material	G Grip Range		Knurled Head	Slotted Head
	Minimum	Maximum		
Steel	3.2 (.13)	19 (.75)	14-10-11-11	14-10-71-11
	9.5 (.38)	31.8 (1.25)	14-10-13-11	14-10-73-11
	22.2 (.88)	42.9 (1.69)	14-10-14-11	14-10-74-11

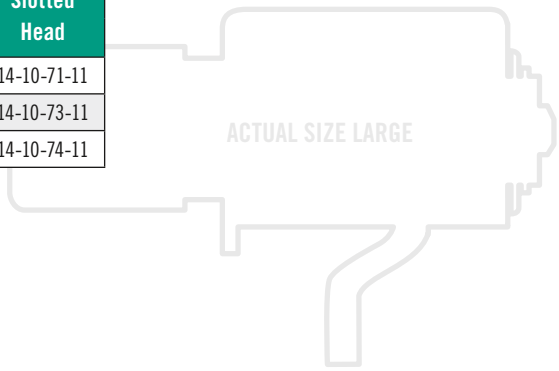

www.southco.com/43
www.southco.com/44
www.southco.com/14

Dimensions in millimeters (inch) unless otherwise stated

57 Compression Latch

Self-adjusting · Spring latch series

- **Four sizes available**
- **Three hole installation**
- **Accommodates grip variances**

Material and Finish

Steel, zinc plated or stainless steel

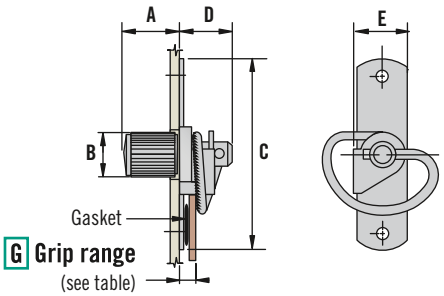

Size	A	B	C	D	E
Miniature	11.9 (.47)	13.5 (.53)	27 (1.06)	7.5 (.03)	8.5 (.33)
Small	15.1 (.59)	14.7 (.58)	39.7 (1.56)	11.1 (.44)	11.6 (.46)
Medium	19.1 (.75)	24.1 (.95)	58.7 (2.31)	17.5 (.69)	17.5 (.69)
Large	26.2 (1.03)	28.2 (1.11)	88.9 (3.5)	25 (.98)	26.2 (1.03)

Nylon knob

Knurled

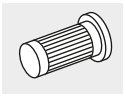

T-bar

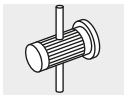

Slot

Hex recess

Tool recess

57 Series

Size	Material	G Grip Range		Knurled	Slotted	Nylon Knob
		Minimum	Maximum			
Mini	Steel	1.2 (.05)	4.3 (.17)	57-20-201-10	57-20-101-10	57-20-401-10
Small	Steel	1.2 (.05)	6.4 (.25)	57-30-201-10	57-30-101-10	57-30-401-10
Medium	Steel	1.6 (.06)	9.5 (.38)	57-10-201-10	57-10-101-10	57-10-401-10
Medium	Stainless steel	1.6 (.06)	9.5 (.38)	57-10-201-40	57-10-101-40	~
Large	Steel	2.4 (.09)	14.3 (.56)	~	57-40-101-10	57-40-401-10

Dimensions in millimeters (inch) unless otherwise stated

- **Broad application range**
- **Multiple industry standard profiles**
- **Clip-on or groove mount**

Material and Finish

Gasket: EPDM Sponge, black
Carrier: 70 Durometer EPDM, black
Substrate: Steel wire

Notes

Maximum recommended compression: see "<" symbol in drawings

Other profiles available

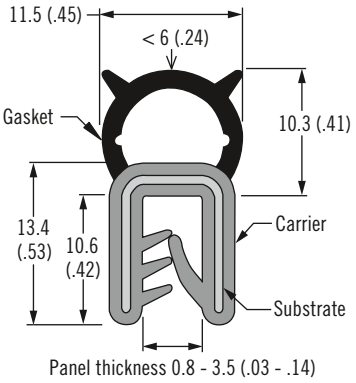

Part Number	Coil Length Meters (Feet)
GA-007-82-M500	50 (164)

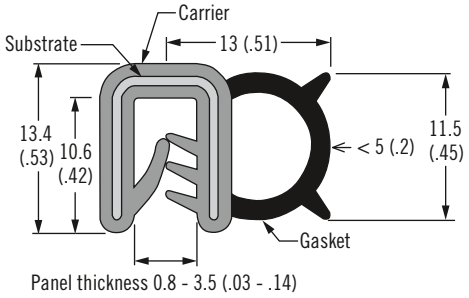

Part Number	Coil Length Meters (Feet)
GA-202-82-M500	50 (164)

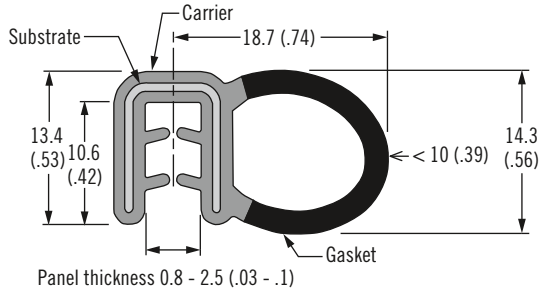

Part Number	Coil Length Meters (Feet)
GA-204-82-M500	50 (164)

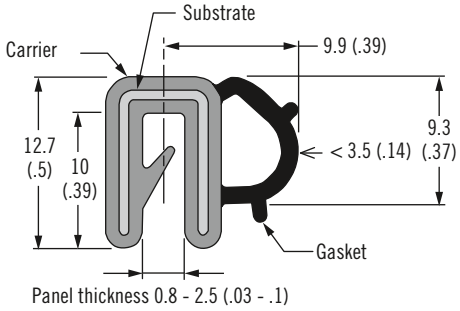

Part Number	Coil Length Meters (Feet)
GA-206-82-M500	50 (164)

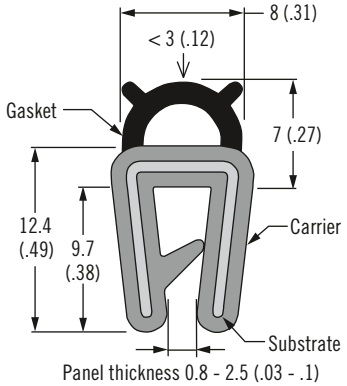

Part Number	Coil Length Meters (Feet)
GA-209-82-M500	50 (164)

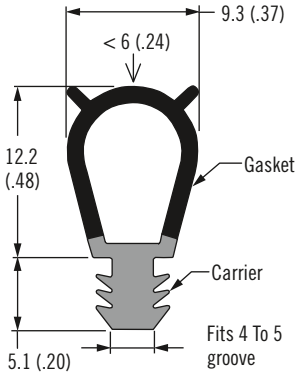

Part Number	Coil Length Meters (Feet)
GA-704-81-M500	50 (164)

CAM LATCHES & SWINGHANDLES

Fixed Grip

Pages 150-152, 154-175

SOUTHCO® fixed grip cam latches offer the most flexible and versatile latch solution thanks to their modular design. Their 90° cam rotation provides quick, easy actuation that is also readily adaptable to multi-point latching. Combining three basic components in material, finish or geometry make them suitable for a wide range of applications.

- Cost effective, easy to configure and install
- Numerous hand, key and tool actuation styles
- Wide material choice
- Provide defined grip
- Sealed versions to meet NEMA / IP standards

E5

E5

E5

E5

E5

E5

E5

Adjustable Grip

Pages 153, 176-185

Multiple models of *SOUTHCO*® adjustable grip cam latches use threaded cams, jam nuts, or set screws to provide adjustment over a generous grip range. Their 90° cam rotation provides quick, easy actuation that is also readily adaptable to multi-point latching. This enables end-users to compensate for material or fabrication variances in order to satisfy design specifications. It also provides the opportunity for field adjustment of grip dimensions to compensate for wear or misalignment.

- User controls grip adjustment
- One latch fits many applications, minimizing latch inventory requirements
- Wide range of mounting and actuation styles

69

61

24

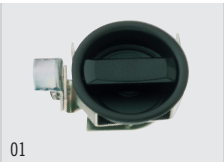
01

68

68

92

Swinghandle for Single-Point Latching

Pages 186 - 187

Get the convenience of a swinghandle latch combined with exceptional versatility for single or multi-point latching. Many grip and security options are available. Durable latches are suitable for enclosures of all sizes.

Multi-point latching rods are available in rod-roller and standard tapered-end style. DIN lock cores and standard *SOUTHCO*® PK lock cores offer multiple key code options with hundreds of standard key codes and custom key code options.

For Swinghandle assemblies suitable for multi-point latching applications, see pages 224-228.

H3

Cam Latches and Swinghandles

Selection guide

Use this selection guide to choose the right cam latch for your application

- Key-Locking Available
- Key-Choice System
- NEMA / IP Rated
- Multi-Point Latching
- Padlockable
- Stainless Steel
- Vibration Resistant
- Fire Resistant

		Product Class	MATERIAL			INSTALLATION		
			Stainless Steel	Zinc and Steel	Plastic	Round Hole Install	Flush / Low Profile	Maximum Door Thickness
FIXED GRIP PAGES 150-152, 154-175		E5	✔	✔	✔		✔	51 (2)
		E5		✔		✔	✔	3.2 (.13)
ADJUSTABLE GRIP PAGES 134-143		92		✔		✔		3 (.12) With screws supplied
		68		✔		✔		25 (1.00) Medium size
		01		✔			✔	9.5 (.38)
		24		✔			✔	7.9 (.31)
		69		✔				12.7 (.50)
		61		✔	✔	✔	✔	50 (1.97)
SWINGHANDLES PAGES 186-187		H3-50		✔			✔	3.2 (.13)
		H3-60		✔			✔	3.2 (.13)

Dimensions in millimeters (inch) unless otherwise stated

	PERFORMANCE				ACCESS STYLE				
Fire EN 45545	NEMA / IP Rated	Vibration Resistant	Maximum Static Load	Grip Range	Key-Locking	Tool Operable	Key-Choice System	Padlockable	Multi-Point Capable
✔	✔	✔	300 - 670 N (67 - 150 lbf)	2 - 82 (.08 - 3.23)	✔	✔	✔	✔	✔
			330 N (74 lbf)	22.7 - 36.7 (.89 - 1.44)	✔		✔		✔
			200 - 400 N (45 - 90 lbf)	16 - 44.5 (.63 - 1.75)	✔				✔
			890 - 1300 N (200 - 300 lbf)	0 - 57 (0 - 2.25)					✔
			160 - 220 N (35-50 lbf)	0 - 28.6 (0 - 1.13)	✔				✔
			445 - 2670 N (100 - 600 lbf)	17.5 - 62 (.69 - 2.44)	✔				✔
		✔	44 - 330 N (10 - 75 lbf)	3.2 - 61.9 (.13 - 2.44)					
			110 N (25 lbf)	4 - 70 (.16 - 2.75)		✔			
	✔		250 N (56 lbf)	10.3 - 40.3 (.41 - 1.59)	✔	✔		✔	✔
	✔		250 N (56 lbf)	10.3 - 40.3 (.41 - 1.59)	✔	✔		✔	✔

E5 Cam Latches

Overview

Modularity and simplicity in action

The *SOUTHCO*® E5 cam latch is a highly modular and easy to configure solution, suitable for a wide range of applications. By changing any of the three basic components (access style driver, latch body or cam) in either geometry or material, the E5 can be easily adjusted to suit most applications.

Product features

- Cost effective, easy to design and install
- Multiple material and access options to suit multiple needs
- Suitable to meet NEMA 4 / IP65 sealing standards
- Corrosion-resistant materials available
- Highly modular and configurable

Match material and finish options for style and functionality requirements

A variety of materials and finishes to complement your application.

Die-cast zinc latch bodies standard finishes:

Chrome plated

Black powder coated

Corrosion resistant materials available

316 Stainless steel

Glass-filled nylon, black

304 Stainless steel

Select one of these four styles to fit your access requirements

There are four basic E5 styles to meet specific door configuration and mounting requirements in terms of design, depth, surface protrusion and operation style.

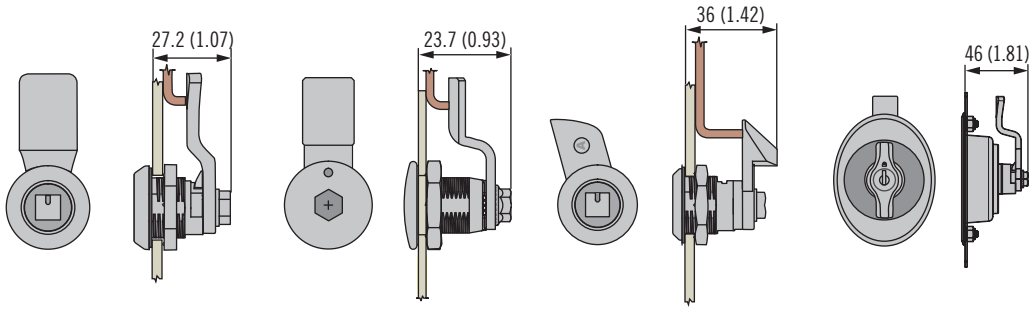

E5 Standard
Industry standard, highly modular and configurable options in a wide choice of materials, finishes and access styles.
(See page 152)

E5 Low Profile
Stylish, low profile design. Tool and hand operated access styles in zinc alloy chrome plated or black powder coated.
(See page 156)

E5 Push-to-Close
Standard E5 with the added functionality of a spring-loaded cam or actuator for single or multi-point operation. Provides quicker turn-to-open, push-to-close action. (See page 166)

E5 Flush Cup Wing Knob
Stylish oval cup design. Provides a clean, flush outer surface. Ideal for multi-point actuation of large doors in aesthetically pleasing applications.
(See page 164)

Dimensions in millimeters (inch) unless otherwise stated

Choose from a wide range of operating styles to fit application and industry requirements.

- Convenient hand-operated wing knob, T and L-handle styles for easy hand access
- Tool operated for restricted access, flush-mount or low-profile clearances, and industry-specifc standards
- Key operated for added security

Hand operable

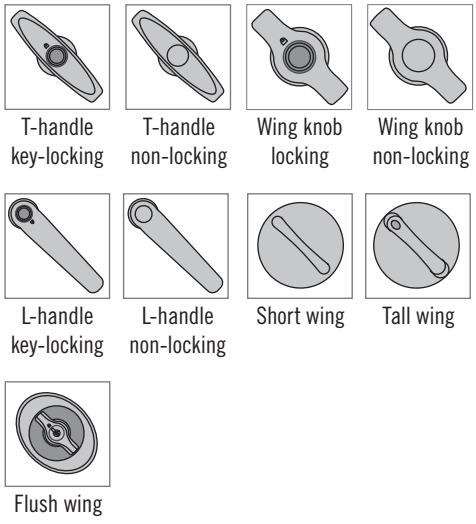

Tool / key operable

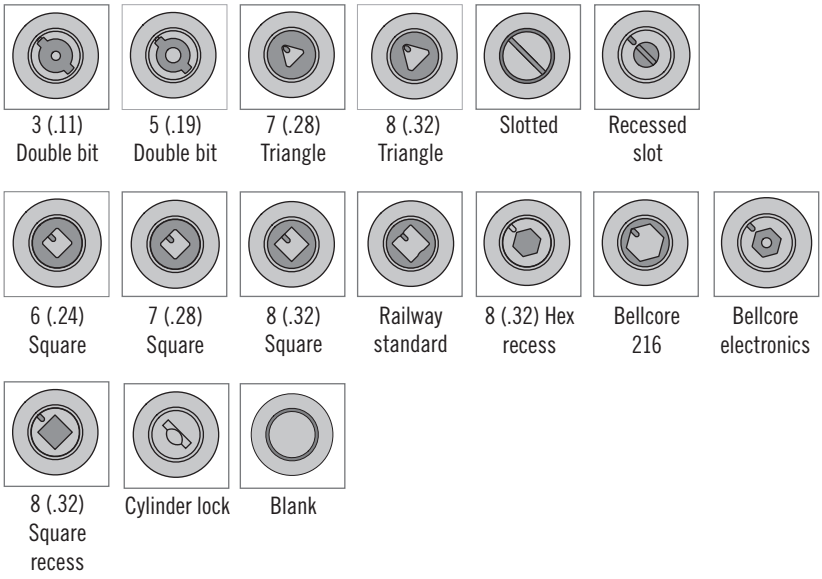

Determine your grip options for a perfect fit

Total grip includes the dimensions of all elements in-between the mounting surface of the latch and the latch's contact surface on the frame - including door thickness, compressed seals and gaskets, accessories, frame offset, etc.

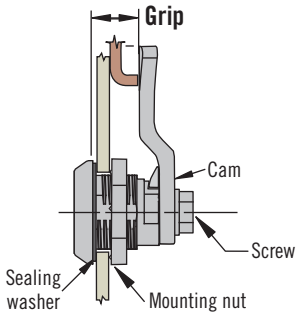

Selecting the right cam for the E5 is easy once the total grip is known. Southco provides a wide selection of standard cams in many grip increments, and special ones like hook and push-to-close cams. Standard cams provide vibration resistance and grip variation tolerance.

Installation

Some *SOUTHCO*® E5 latches are shipped latch and cam separately and some completely pre-assembled. See product pages for details.

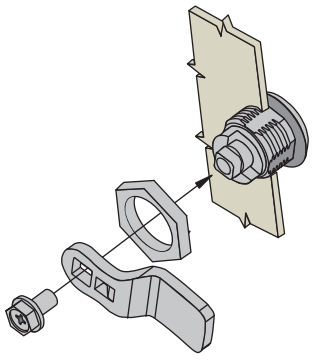

E5 Standard
Latch and cam shipped separately.

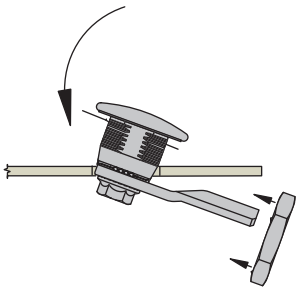

E5 Low Profile
Latch and cam shipped pre-assembled.

Dimensions in millimeters (inch) unless otherwise stated

E5 Cam Latch

Stainless steel · Tool operated · Fixed grip

- **Single hole install**
- **Latched / unlatched indicator**
- **EN 45545-3 E60 Compliant**

Material and Finish

Stainless steel, 304 or 316 grade

Performance Details

Maximum static load:
304 Stainless steel 550 N (124 lbf)
316 Stainless steel 670 N (150 lbf)

Sealing Notes

NEMA 4 / IP65 achieved using gasket supplied

Installation Notes

Mounting nut:
Maximum tightening torque:
20 N·m (177 in·lbf)

Screw Maximum tightening torque
10 N·m (90 in·lbf)

Keys and Accessories

See page 121 and 169-175

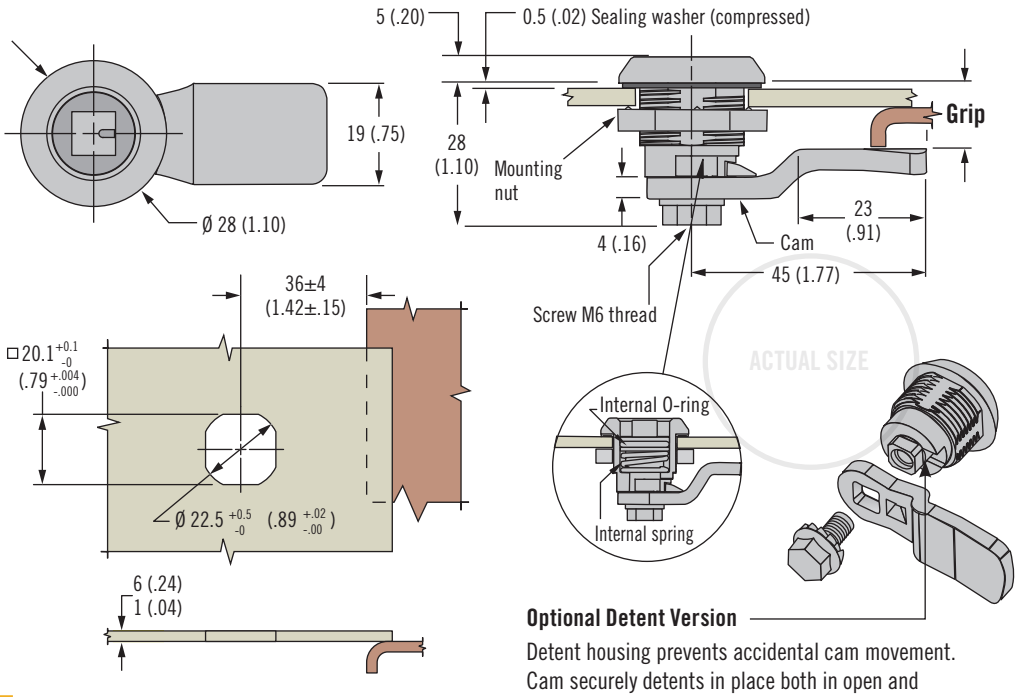

Optional Detent Version

Detent housing prevents accidental cam movement. Cam securely detents in place both in open and closed positions.

H Head Styles

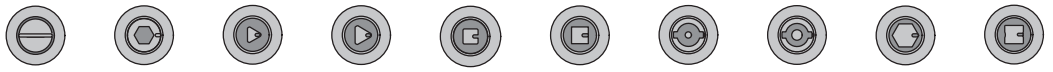

Part Number Selection

See table

Order latch and cam separately

Latch Part Number (no cam)

E5 - B - H M - UU1

H Head style

- **00** Slotted
- **01** 8 (.32) Hex recess
- **02** 7 (.28) Triangle
- **03** 8 (.32) Triangle
- **04** 7 (.28) Square
- **05** 8 (.32) Square
- **06** 3 (.11) Double bit
- **07** 5 (.19) Double bit
- **13** Bellcore 216
- **22** Railway standard

B Body

- **6** Normal housing
- **32** Detented housing

M Material

- **24** 304 Stainless steel
- **27** 316 Stainless steel

Cam Part Number Table (order separately from latch)

Grip +2(.08) - 0 (.00)	Part Number 304 Stainless steel	Part Number 316 Stainless steel	Grip +2(.08) - 0 (.00)	Part Number 304 Stainless steel	Part Number 316 Stainless steel	Grip +2(.08) - 0 (.00)	Part Number 304 Stainless steel	Part Number 316 Stainless steel	Grip +2(.08) - 0 (.00)	Part Number 304 Stainless steel	Part Number 316 Stainless steel
4 (.16)	E5-8003	E5-9003	14 (.55)	E5-8008	E5-9008	24 (.94)	E5-8013	E5-9013	34 (1.34)	E5-8018	E5-9018
6 (.24)	E5-8004	E5-9004	16 (.63)	E5-8009	E5-9009	26 (1.02)	E5-8014	E5-9014	36 (1.42)	E5-8019	E5-9019
8 (.31)	E5-8005	E5-9005	18 (.71)	E5-8010	E5-9010	28 (1.10)	E5-8015	E5-9015	38 (1.50)	E5-8020	E5-9020
10 (.39)	E5-8006	E5-9006	20 (.79)	E5-8011	E5-9011	30 (1.18)	E5-8016	E5-9016	40 (1.57)	E5-8021	E5-9021
12 (.47)	E5-8007	E5-9007	22 (.87)	E5-8012	E5-9012	32 (1.25)	E5-8017	E5-9017	42 (1.65)	E5-8022	E5-9022

Dimensions in millimeters (inch) unless otherwise stated

southco®

E5 Cam Latch

Zinc · Tool operated · Adjustable grip

- **Single hole install**
- **Latched / unlatched indicator**
- **Easy grip adjustment**
- **Tool operated for security**

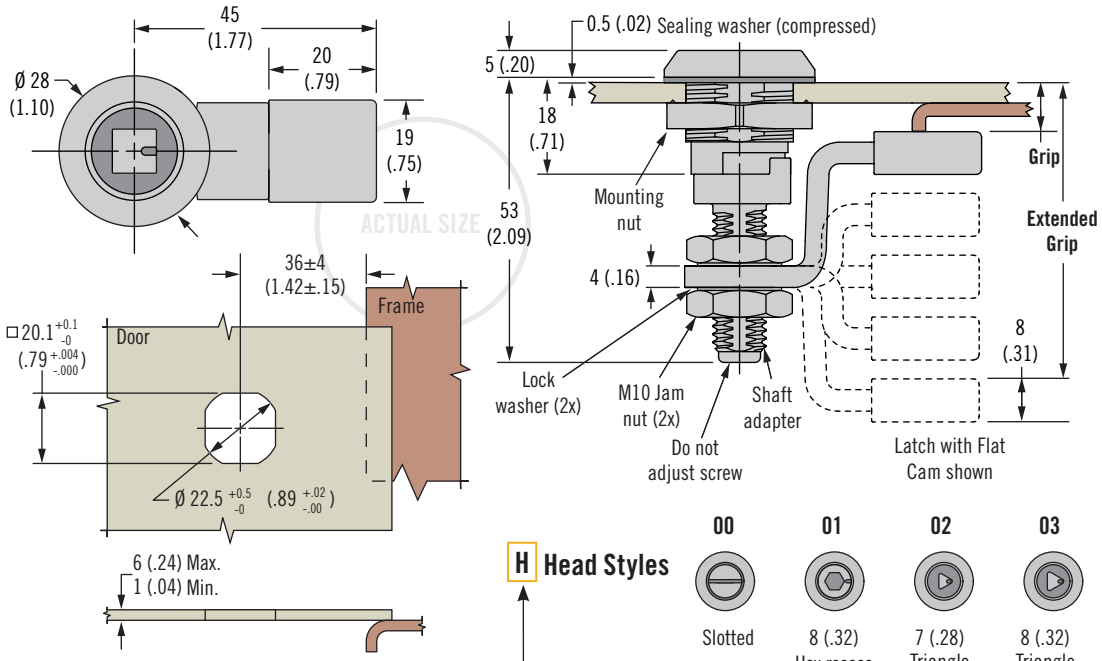

Latch Part Number (no cam)

E5 - 6 - H F - 01

F Finish
- **2** Bright chrome
- **5** Black powder coated

H Head Styles

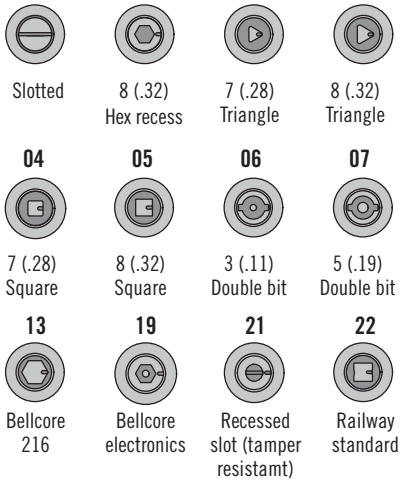

Material and Finish

Zinc alloy, powder coated or chrome plated and steel, zinc plated

Performance Details

Maximum static load: 330 N (74 lbf)

Installation Notes

Position cam so latching function can be achieved comfortably by hand. Recommended tightening torque for mounting nut is 10 N·m (88 in·lbf) max, and jam nut is 7 N·m (62 in·lbf)

Sealing Notes

NEMA 4 / IP65 achieved using gasket supplied

Keys and Accessories

See page 121 and 169-175

Part Number Selection

See table

Order latch and cam separately

Protected Cam Part Number Table (order separately from latch)				
Minimum Grip +2(.08) - 0	**Maximum Grip +2(.08) - 0**	**Offset**	**Cam Type**	**Part Number**
5 (.20)	16.5 (.65)	Deep Cam	Forward	E5-4001
51 (2.01)	62.5 (2.46)	Deep Cam	Reversed	
16.5 (.65)	28 (1.10)	Cam	Forward	E5-4002
39.5 (1.56)	51 (2.01)	Cam	Reversed	
28 (1.10)	39.5 (1.56)	-	Straight Cam	E5-4003

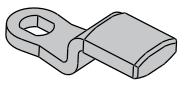

Protected Cam
- Stable frame engagement
- Improved surface contact
- Minimal frame surface prep

Roller Cam Part Number Table (order separately from latch)				
0 (0)	5 (.20)	Extra Deep Cam	Forward	E5-4505
54 (2.13)	62.5 (2.46)	Extra Deep Cam	Reversed	
0 (0)	8 (.31)	Deep Cam	Forward	E5-4506
45 (1.89)	58 (2.28)	Deep Cam	Reversed	
8 (.31)	18 (.71)	Medium Cam	Forward	E5-4507
38 (1.50)	48 (1.89)	Medium Cam	Reversed	
18 (.17)	28 (1.10)	Low Cam	Forward	E5-4508
28 (1.10)	38 (1.50)	Low Cam	Reversed	

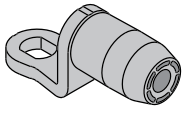

Roller Cam
- Reduce operating effort
- Minimize scratching frame finish
- Detented feel (with optional Keeper)

Dimensions in millimeters (inch) unless otherwise stated

E5 Cam Latch

Zinc · Tool operated · Short Housing · Fixed grip

- **Single hole install**
- **Latched / unlatched indicator**
- **EN 45545-3 E10 Compliant**

Material and Finish

Zinc alloy, powder coated or chrome plated and steel, zinc plated

Performance Details

Maximum static load: 330 N (74 lbf)

Installation Notes

Mounting nut:
Maximum tightening torque:
10 N·m (88 in·lbf)

Screw Maximum tightening torque:
5 N·m (45 in·lbf)

Sealing Notes

NEMA 4 / IP65 achieved using gasket supplied

Keys and Accessories

See page 121 and 169-175

Notes

Suitable for push-to-close action
see page 166

Part Number Selection

See table
Order latch and cam separately

Optional Keeper for Roller Cam

Part number E5-74-601-33

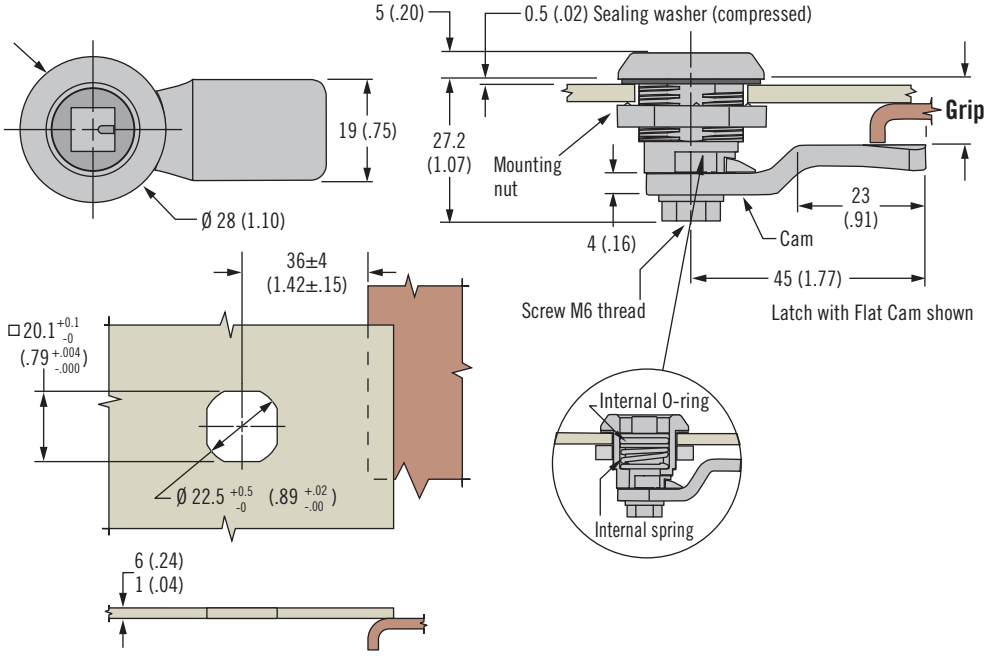

H Head Styles

00	01	02	03
Slotted	8 (.32) Hex recess	7 (.28) Triangle	8 (.32) Triangle

04	05	06	07	08
7 (.28) Square	8 (.32) Square	3 (.11) Double bit	5 (.19) Double bit	8 (.32) Square recess

13	19	21	22	23
Bellcore 216	Bellcore electronics	Recessed slot (tamper resistamt)	Railway standard	Blank

Latch Part Number (no cam)

E5 - 6 - H F - UU1

F Finish

2 Bright chrome
5 Black powder coated

Cam Options - See Page 170 Short Housing Table

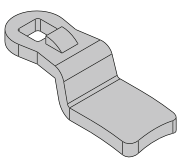

Standard Cam

- Stable frame engagement
- Improved surface contact
- Minimal frame surface prep

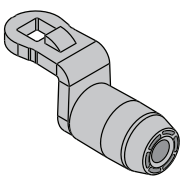

Roller Cam

- Reduce operating effort
- Minimize scratching frame finish
- Detented feel (with optional Keeper)

Dimensions in millimeters (inch) unless otherwise stated

E5 Cam Latch

Zinc · Tool operated · Long Housing · Fixed grip

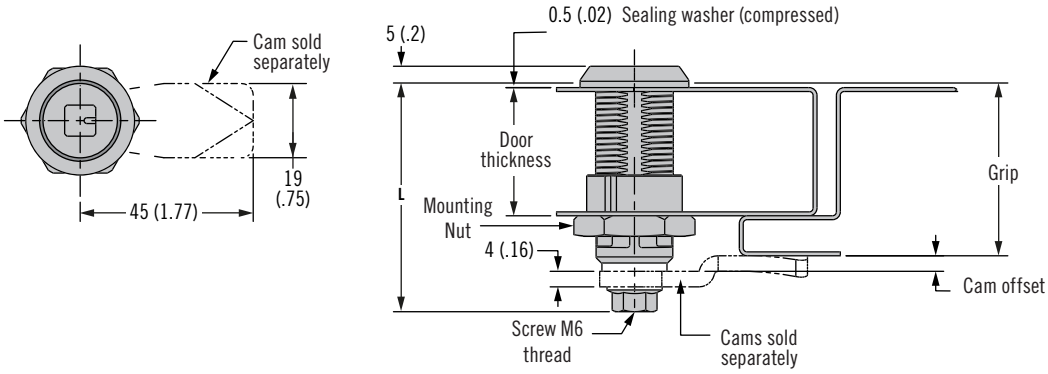

Door Preparation

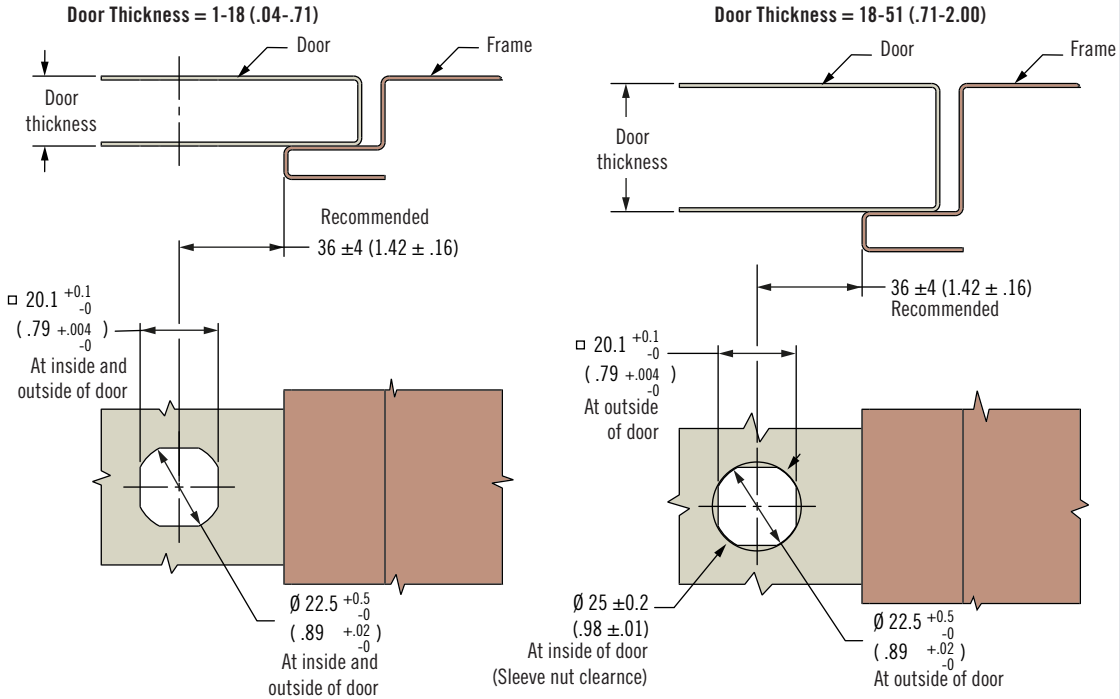

- **Single hole install**
- **Latched / unlatched indicator**
- **Suitable for thick doors**

Material and Finish

Zinc alloy, powder coated or chrome plated and steel, zinc plated

Performance Details

Maximum static load: 330 N (74 lbf)

Installation Notes

Mounting nut:
Maximum tightening torque:
10 N·m (88 in·lbf)

Screw Maximum tightening torque:
5 N·m (45 in·lbf)

Sealing Notes

NEMA 4 / IP65 achieved using gasket supplied

Keys and Accessories

See page 121 and 169-175

Part Number Selection

See table

Order latch and cam separately

Compatible with flat and roller cams - See page 171, Long Housing Table for cam part numbers

E5 - 6 A - H F - UU D

F **Finish**
- **2** Bright chrome
- **5** Black powder coated

H **Head style** (See for details)
- **00** Slotted
- **01** 8 (.32) Hex recess
- **02** 7 (.28) Triangle
- **03** 8 (.32) Triangle
- **04** 7 (.28) Square
- **05** 8 (.32) Square
- **06** 3 (.11) Double bit
- **07** 5 (.19) Double bit
- **08** 8 (.32) Square recess
- **13** Bellcore 216
- **19** Bellcore Electronics
- **21** Recessed slot (tamper resistant)
- **22** Railway standard
- **23** Blank

D	Door Thickness	Grip Range	L
1	1-18 (.04-.71)	5-53 (.20-2.09)	45.5 (1.79)
2	1-18 (.04-.71)	54-82 (2.13-3.23)	68.2 (2.69)
3	18-33 (.71-1.30)	18-66 (.71-2.60)	58.2 (2.29)
4	18-33 (.71-1.30)	68-82 (2.60-3.23)	68.2 (2.69)
5	33-51 (1.30-2.00)	34-82 (1.34-3.23)	68.2 (2.69)

Optional Keeper for Roller Cam

Part number E5-74-601-33

Dimensions in millimeters (inch) unless otherwise stated

E5 Cam Latch Low Profile

Zinc · Tool or hand operated · Fixed grip

- **Single hole install**
- **Latched / unlatched indicator**
- **Shipped fully assembled**
- **EN 45545-3 E10 Compliant**

Material and Finish

Zinc alloy, powder coated or chrome plated and steel, zinc plated

Performance Details

Maximum static load: 330 N (74 lbf)

Installation Notes

Mounting nut
Maximum tightening torque:
10 N·m (88 in·lbf)

Keys and Accessories

See page 121 and 169-175

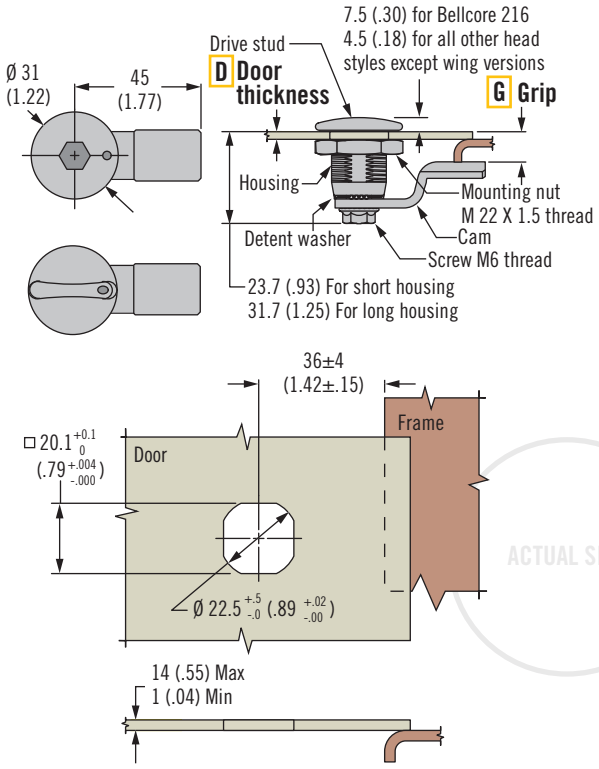

H Head Styles

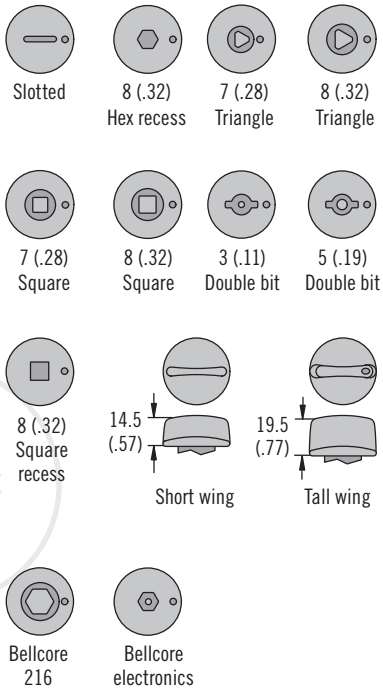

Part Number Selection

See table

Latch is shipped fully assembled

For door thicknesses
1 - 6 (.039 - .236) grip must exceed door thickness by 4 (.157) for assembled installation

When sealing option is selected, add 0.4 (.02) to grip calculation to accommodate sealing washer

H Head style

- **00** Slotted
- **01** 8 (.32) Hex recess
- **02** 7 (.28) Triangle
- **03** 8 (.32) Triangle
- **04** 7 (.28) Square
- **05** 8 (.32) Square
- **06** 3 (.11) Double bit
- **07** 5 (.19) Double bit
- **08** 8 (.32) Square recess
- **11** Short wing
- **12** Tall wing
- **13** Bellcore 216
- **19** Bellcore Electronics

F Finish

- **1** Textured chrome
- **5** Black powder coated

S Sealing option

- **0** No o-ring or external seal
- **1** O-ring and external seal to meet NEMA 4/IP65 standards

E5 - D - H F - G S

D Door thickness range

- **1** 1 - 6 (.039 - .236) (short housing supplied)
- **2** 1 - 14 (.039 - (.551) (long housing supplied)

G Grip table

G	Grip		G	Grip		G	Grip		G	Grip	
	Short housing	Long housing		Short housing	Long housing		Short housing	Long housing		Short housing	Long housing
00	Do not use	6 (.24)	05	8 (.31)	16 (.63)	10	18 (.71)	26 (1.02)	15	28 (1.10)	36 (1.42)
01	Do not use	8 (.31)	06	10 (.39)	18 (.71)	11	20 (.79)	28 (1.10)	16	30 (1.18)	38 (1.50)
02	2 (.08)	10 (.39)	07	12 (.47)	20 (.79)	12	22 (.87)	30 (1.18)	17	32 (1.25)	40 (1.57)
03	4 (.16)	12 (.47)	08	14 (.55)	22 (.87)	13	24 (.94)	32 (1.25)	18	34 (1.34)	42 (1.65)
04	6 (.24)	14 (.55)	09	16 (.63)	24 (.94)	14	26 (1.02)	34 (1.34)	19	36 (1.42)	44 (1.73)

If grip falls between two choices, use the smaller option

Dimensions in millimeters (inch) unless otherwise stated

E5 Cam Latch

Zinc · Shutter · Tool operated · Fixed grip

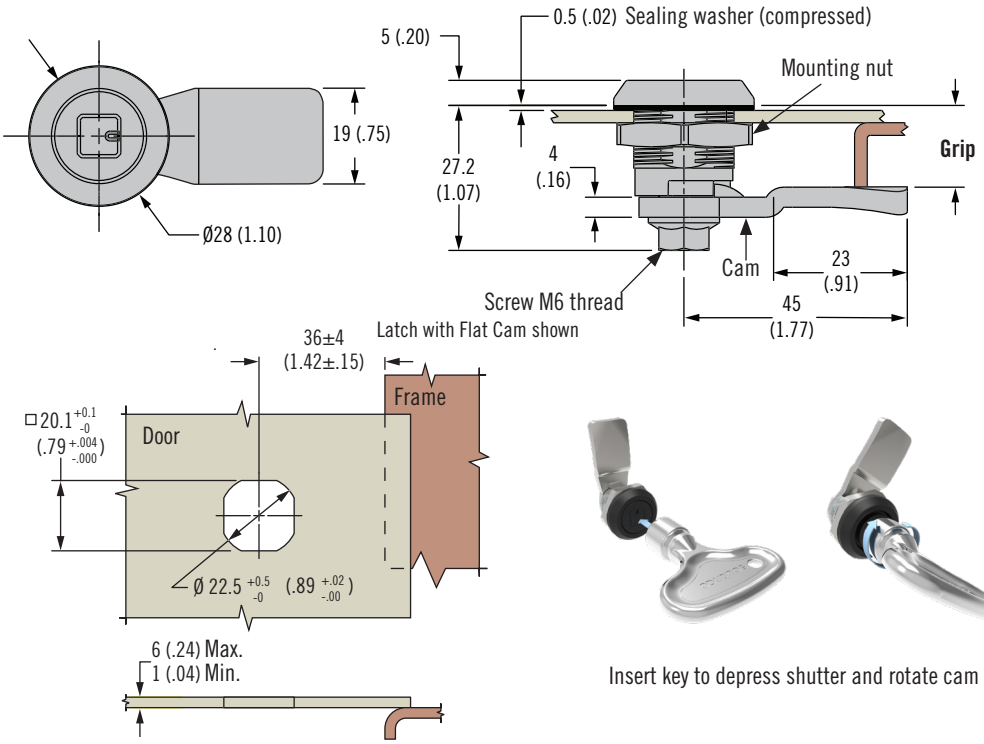

Insert key to depress shutter and rotate cam

- **Single hole install**
- **Latched / unlatched detent**
- **Vibration resistant**
- **EN 61373 Compliant**

Material and Finish

Zinc alloy, powder coated or chrome plated and steel, zinc plated

Performance Details

Maximum static load: 330 N (74 lbf)

Installation Notes

Mounting nut maximum tightening torque: 10 N·m (88 in·lbf)

Screw Maximum tightening torque: 5 N·m (45 in·lbf)

Sealing Notes

NEMA 4 / IP65 achieved using gasket supplied

Keys and Accessories

See page 121 and 169-175

H Head Styles

7 (.28) Triangle	8 (.32) Triangle	7 (.28) Square	8 (.32) Square	Bellcore 216

Part Number Selection

See table

Order latch and cam separately

Latch Part Number (no cam)

E5 - 8 - H F - UU1

H Head style

- **02** 7 (.28) Triangle
- **03** 8 (.32) Triangle
- **04** 7 (.28) Square
- **05** 8 (.32) Square
- **13** Bellcore 216

F Finish

- **2** Bright chrome
- **5** Black powder coated

Cam Part Number Table (order separately from latch)

Grip	Part Number	Grip	Part Number	Grip	Part Number	Grip	Part Number
4 (.16)	E5-6003	14 (.55)	E5-6008	24 (.94)	E5-6013	34 (1.34)	E5-6018
6 (.24)	E5-6004	16 (.63)	E5-6009	26 (1.02)	E5-6014	36 (1.42)	E5-6019
8 (.31)	E5-6005	18 (.71)	E5-6010	28 (1.10)	E5-6015	38 (1.50)	E5-6020
10 (.39)	E5-6006	20 (.79)	E5-6011	30 (1.18)	E5-6016	40 (1.57)	E5-6021
12 (.47)	E5-6007	22 (.87)	E5-6012	32 (1.25)	E5-6017	42 (1.65)	E5-6022

E5 Cam Latch

Zinc · Tool or hand operated · Fixed grip · Mini size

- **Single hole install**
- **Compact size**
- **Minimal panel intrusion**

Material and Finish

Zinc alloy, black powder coated and steel, zinc plated

Performance Details

Maximum static load: 130 N (29 lbf)

Sealing Notes

NEMA 4 / IP65 achieved using gasket supplied

Installation Notes

Mounting nut maximum tightening torque: 5 N·m (45 in-lbf)

Screw Maximum tightening torque: 1 N·m (9 in-lbf)

Key part numbers

6mm (.24) Triangle
E3-19-3
6mm (.24) Square
E3-20-3

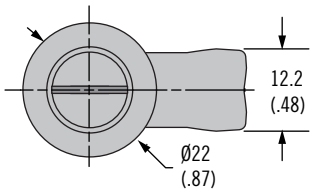

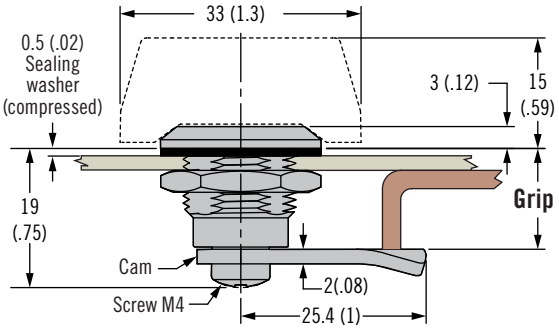

ACTUAL SIZE

H Head style

00	14	17	18
Slotted	6 (.24) Square	6 (.24) Triangle	6 (.24) Hex Recess

30	31	40
Wing Knob	Wing Knob Key Lockable	Key Lockable

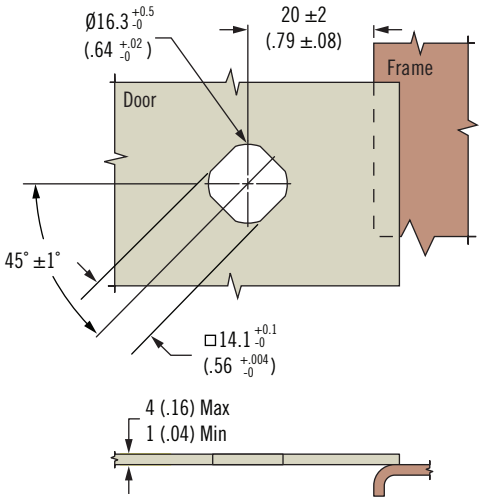

Latch Part Number (no cam)

E5 - M - H F - UU1 - 1 K

K Key Options
- **0** No Keys Included, Order Separately
- **1** 1 Key Supplied

F Finish
- **2** Bright chrome
- **5** Black powder coated

H Head style
- **00** Slotted (Omit last two digits of part number)
- **14** Square 6mm (Omit last two digits of part number)
- **17** Triangle 6mm (Omit last two digits of part number)
- **18** Hex Recess 6mm (Omit last two digits of part number)
- **30** Wing Knob (Omit last two digits of part number)
- **31** Wing Knob, Key Lockable, Keyed CH751
- **40** Key Lockable, Keyed CH751

Part Number Selection

Order latch and cam separately

Cam Part Number Table (order separately from latch)

Grip	Part Number	Grip	Part Number
4 (.16)	E5-3005	16 (.63)	E5-3011
6 (.24)	E5-3006	18 (.71)	E5-3012
8 (.31)	E5-3007	20 (.79)	E5-3013
10 (.39)	E5-3008	22 (.87)	E5-3014
12 (.47)	E5-3009	24 (.94)	E5-3015
14 (.55)	E5-3010	26 (1.02)	E5-3016

Dimensions in millimeters (inch) unless otherwise stated

E5 Cam Latch

Glass-filled nylon · Tool or hand operated · Fixed grip

- **Single hole install**
- **Corrosion-resistant materials**

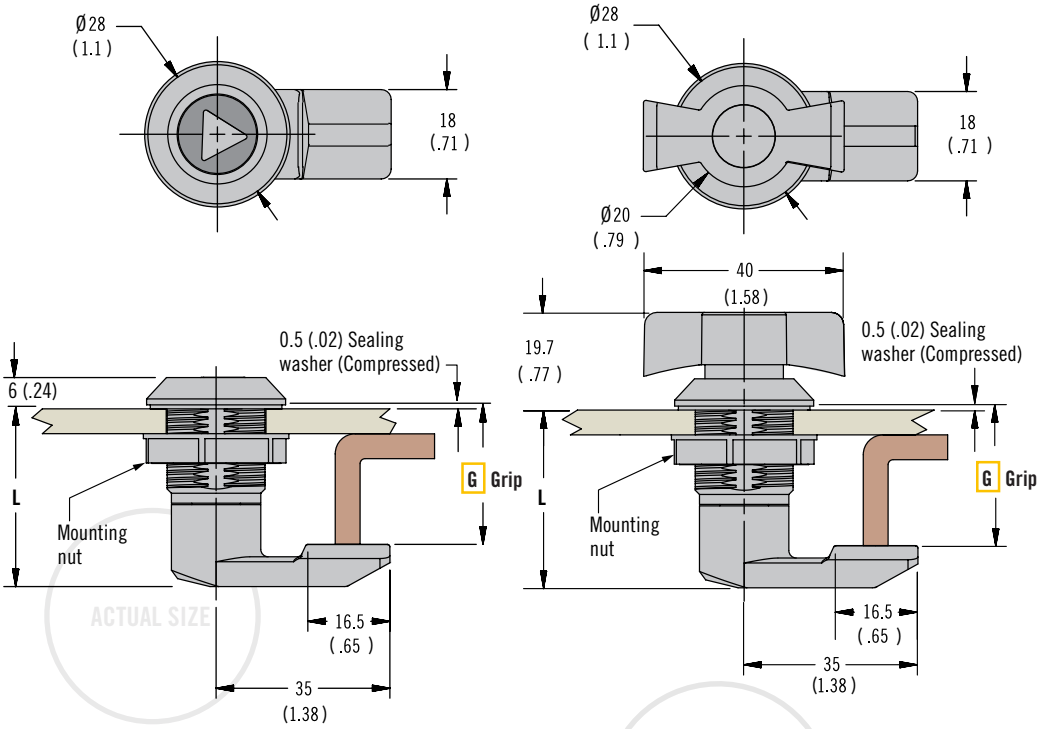

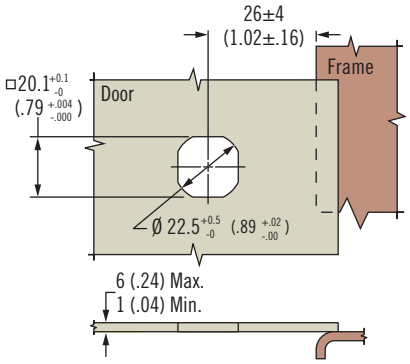

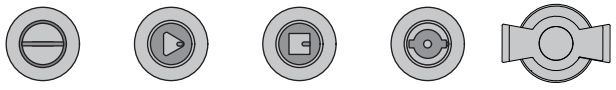

H Head Styles

Material and Finish

Glass-filled nylon and Stainless steel

Performance Details

Average ultimate load: 300 N (68 lbf)

Installation Notes

Mounting nut
Maximum tightening torque: 4.25 N·m (38 in·lbf)

Sealing Notes

NEMA 4 / IP65 achieved using gasket supplied

Keys and Accessories

See page 121 and 169-175

Part Number Selection

See table

Latch Part Number

E5 - 4 - H 3 - G 1

H Head style
- **00** Slotted
- **03** 8 (.32) Triangle
- **05** 8 (.32) Square
- **06** 3 (.11) Double bit
- **30** Wing knob

G Grip table

Total Grip	G	L	Max. Door Thickness for Assembled Latch
16 (.63)	16	28.1 (1.1)	5 (.20)
18 (.71)	18	28.1 (1.1)	5 (.20)
20 (.79)	20	28.1 (1.1)	6 (.24)
22 (.87)	22	32 (1.26)	6 (.24)
24 (.94)	24	34.6 (1.36)	6 (.24)
25 (.98)	25	35.6 (1.4)	6 (.24)
26 (1.02)	26	36.6 (1.44)	6 (.24)
28 (1.10)	28	38.6 (1.52)	6 (.24)
30 (1.18)	30	40.6 (1.6)	6 (.24)
32 (1.26)	32	42.6 (1.68)	6 (.24)
34 (1.34)	34	44.6 (1.76)	6 (.24)
36 (1.42)	36	46.6 (1.83)	6 (.24)

E5 Cam Latch

Zinc · L-handle · Hand operated · Fixed grip · Short Housing

- **Single hole install**
- **Multiple key codes**
- **Padlockable option**

Material and Finish

Zinc alloy, powder coated or chrome plated and steel, zinc plated

Performance Details

Maximum static load: 330 N (74 lbf)

Sealing Notes

NEMA 4 / IP65 achieved using gasket supplied

Installation Notes

Mounting nut: Maximum tightening torque:
10 N·m (88 in·lbf)

Screw maximum tightening torque:
5 N·m (45 in·lbf)

Keys

See page 121

Notes

Suitable for push-to-close action see page 166

For lock core selection and a complete overview of the *SOUTHCO*® Key-Choice System see page 190

For adjustable grip versions see page 176

Part Number Selection

Order latch, cam, and padlock hasp separately.

Compatible with standard and roller cams. See page 170, Short Housing Table for cam part numbers

Padlock hasp part number:
CW actuation: E5-75-601-86
CCW actuation: E5-75-602-86

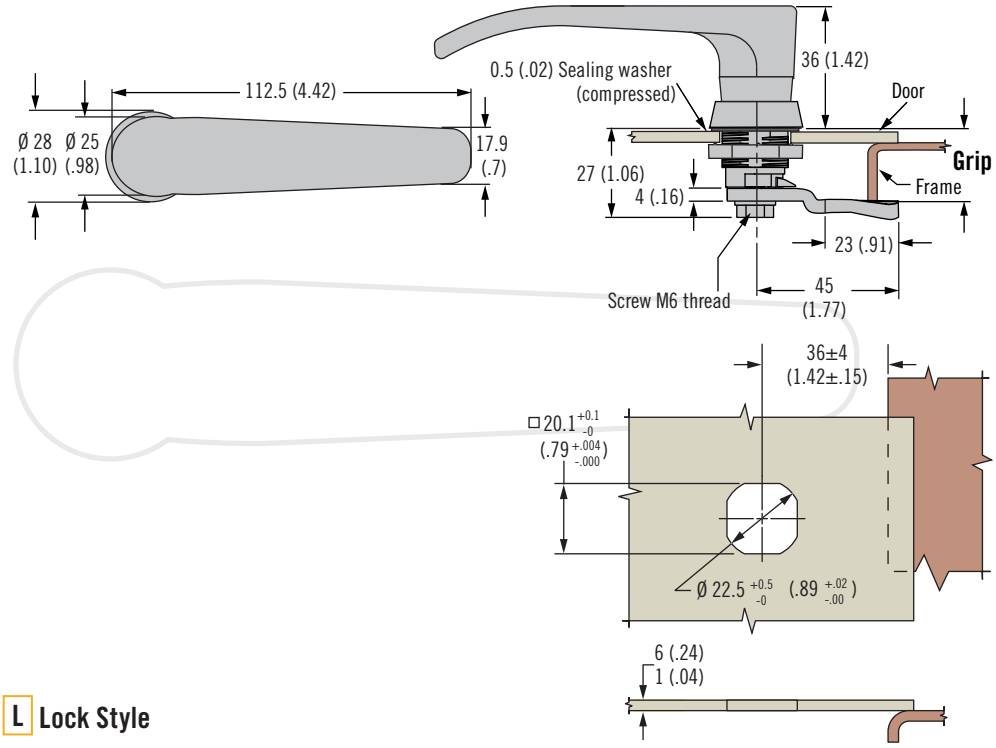

L Lock Style

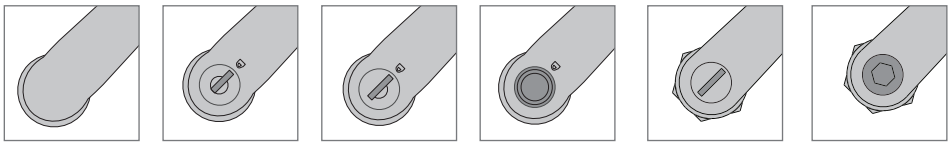

Non-locking

Key-locking
Key code CH751

Key-locking
Key code R001

Key-locking
(order lock core separately)

Tool-locking
Slotted

Tool-locking
8mm Hex

Latch Part Number

(no cam)

E5 - H - L F - UU1 - 1 K

H Handle Style
- **7** Padlockable Handle
- **9** Non-Padlockable Handle

F Finish
- **2** Bright chrome
- **5** Black powder coated

L Lock style
- **70** Non-locking (omit last two digits of part number)
- **71** Keyed CH751 (lock core finish matches handle finish)
- **72** Keyed R001 (stainless steel scalp shuttered)
- **73** Without lock core (omit last two digits of part number) Order lock core separately, see page 190
- **100** Tool Locking, Slotted (omit last two digits of part number)
- **101** Tool Locking, 8mm Hex (omit last two digits of part number)

K Key options
- **0** No keys supplied (order separately, see page 121)
- **3** 1 Overmolded key supplied

Dimensions in millimeters (inch) unless otherwise stated

E5 Cam Latch

Zinc · L-handle · Hand operated · Fixed grip · Long Housing

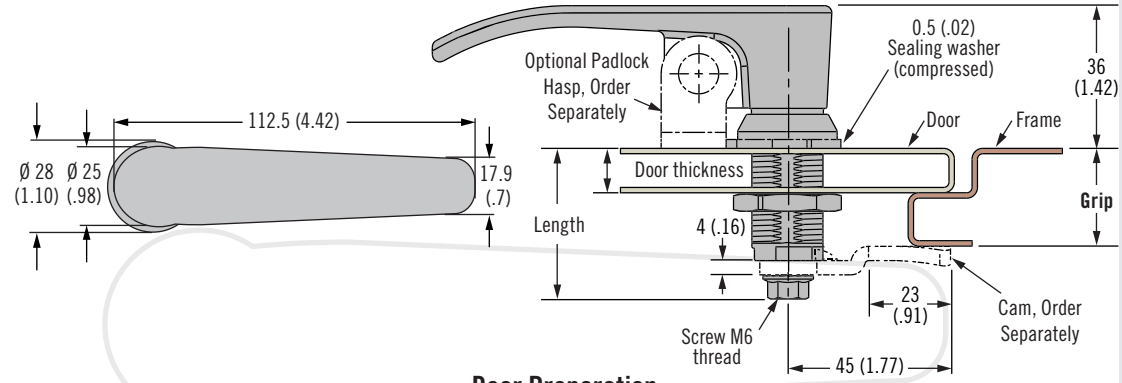

Door Preparation

Door Thickness = 1-18 (.04-.71)

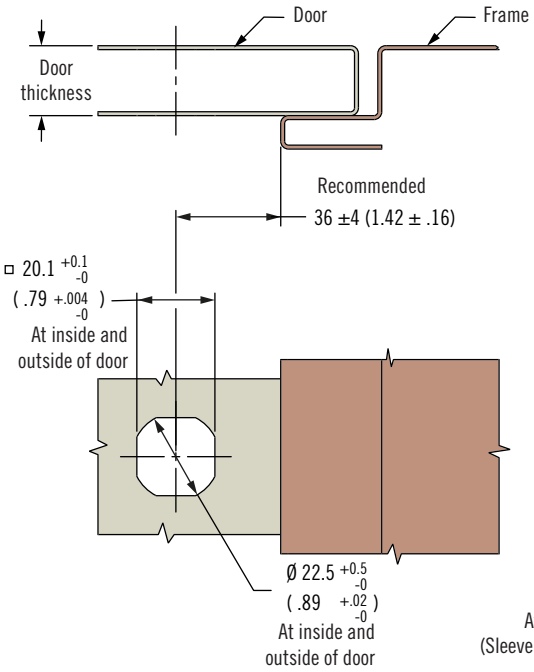

Door Thickness = 18-51 (.71-2.00)

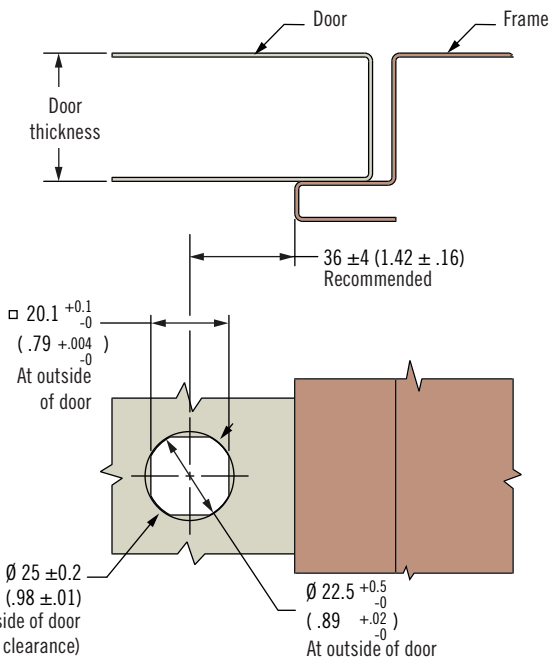

Latch Part Number

(no cam)

F **Handle Style**
- **7** Padlockable Handle
- **9** Non-Padlockable Handle

F **Finish**
- **2** Bright chrome
- **5** Black powder coated

E5 - HA - L F - UU D - 1 K

K **Key options**
- **0** No keys supplied (order separately, see page 121)
- **3** 1 Overmolded key supplied

L **Lock style** (See page 160)
- **70** Non-locking (omit last two digits of part number)
- **71** Keyed CH751 (lock core finish matches handle finish)
- **72** Keyed R001 (stainless steel scalp shuttered)
- **73** Without lock core (omit last two digits of part number) Order lock core separately, see page 190
- **100** Tool Locking, Slotted (omit last two digits of part number)
- **101** Tool Locking, 8mm Hex (omit last two digits of part number)

D	Door thickness	Grip range	Length
1	1-18 (.04-.71)	5-53 (.20-2.09)	45.5 (1.79)
2	1-18 (.04-.71)	54-82 (2.13-3.23)	68.2 (2.69)
3	18-33 (.71-1.30)	18-66 (.71-2.60)	58.2 (2.29)
4	18-33 (.71-1.30)	68-82 (2.60-3.23)	68.2 (2.69)
5	33-51 (1.30-2.00)	34-82 (1.34-3.23)	68.2 (2.69)

- **Suitable for thick doors**
- **Single hole install**
- **Multiple key codes**
- **Padlockable option**

Material and Finish

Zinc alloy, powder coated or chrome plated and steel, zinc plated

Performance Details

Maximum static load: 330 N (74 lbf)

Sealing Notes

NEMA 4 / IP65 achieved using gasket supplied

Installation Notes

Mounting nut: Maximum tightening torque:
10 N·m (88 in·lbf)

Screw maximum tightening torque:
5 N·m (45 in·lbf)

Keys

See page 121

For lock core selection and a complete overview of the *SOUTHCO*® Key-Choice System see page 190

Part Number Selection

Order latch, cam, and padlock hasp separately.

Compatible with standard and roller cams. See page 171, Long Housing Table for cam part numbers

Padlock hasp part number:
CW actuation: E5-75-601-86
CCW actuation: E5-75-602-86

E5 Cam Latch

Zinc · T-handle · Hand operated · Fixed grip

- **Single hole install**
- **Multiple key codes**

Material and Finish
Zinc alloy, powder coated or chrome plated and steel, zinc plated

Performance Details
Maximum static load: 330 N (74 lbf)

Sealing Notes
NEMA 4 / IP65 achieved using gasket supplied

Installation Notes
Mounting nut:
Maximum tightening torque:
10 N·m (88 in·lbf)

Screw:
Maximum tightening torque:
5 N-m (45 in-lb)

Keys
See page 121

Notes
Suitable for push-to-close action see page 166

For adjustable grip versions see page 208

For lock core selection and a complete overview of the *SOUTHCO*® Key-Choice System see page 190

Part Number Selection
Order latch and cam separately

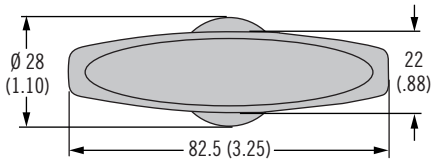

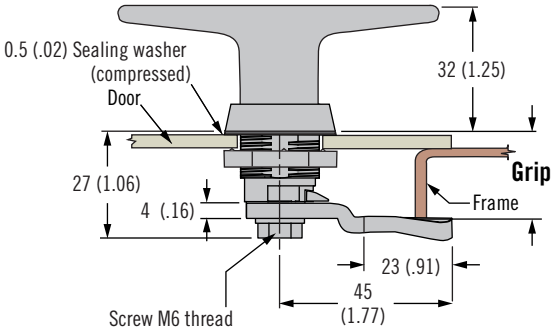

Latch with Flat Cam shown

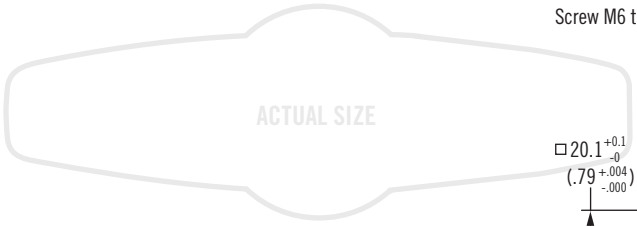

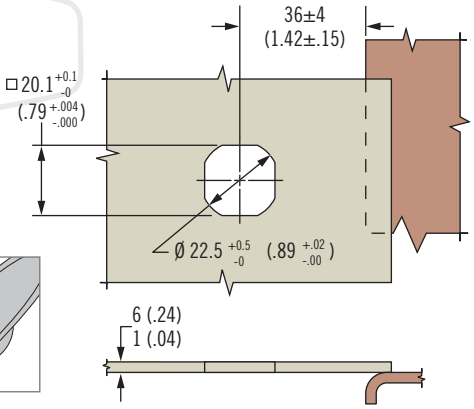

L Lock Style

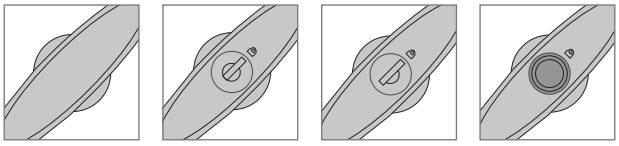

Non-locking | Key-locking key code CH751 | Key-locking key code R001 with shutter | Key-locking (order lock core separately)

Latch Part Number
(no cam)

E5 - 9 - L F - UU1 - 1 K

F Finish
- **2** Bright chrome
- **5** Black powder coated

L Lock style
- **60** Non-locking (omit last two digits of part number)
- **61** Keyed CH751 (lock core finish matches handle finish)
- **62** Keyed R001 (stainless steel scalp shuttered)
- **63** Without lock core (omit last two digits of part number)
  Order lock core separately, see page 190

K Key options
- **0** No keys supplied (order separately, See page 121)
- **3** 1 Overmolded key supplied

Cam Part Number Table (order separately from latch)

Grip	Part Number	Grip	Part Number	Grip	Part Number	Grip	Part Number
4 (.16)	E5-6003	14 (.55)	E5-6008	24 (.94)	E5-6013	34 (1.34)	E5-6018
6 (.24)	E5-6004	16 (.63)	E5-6009	26 (1.02)	E5-6014	36 (1.42)	E5-6019
8 (.31)	E5-6005	18 (.71)	E5-6010	28 (1.10)	E5-6015	38 (1.50)	E5-6020
10 (.39)	E5-6006	20 (.79)	E5-6011	30 (1.18)	E5-6016	40 (1.57)	E5-6021
12 (.47)	E5-6007	22 (.87)	E5-6012	32 (1.25)	E5-6017	42 (1.65)	E5-6022

If grip falls between two choices, use the smaller option

Dimensions in millimeters (inch) unless otherwise stated

E5 Cam Latch

Zinc · Wing style · Fixed grip

- **Single hole install**
- **Multiple key codes**
- **Easy finger grip**

Material and Finish

Zinc alloy, black powder coated and steel, zinc plated

Performance Details

Maximum static load: 330 N (74 lbf)

Sealing Notes

NEMA 4 / IP65 achieved using gasket supplied

Installation Notes

Mounting nut maximum tightening torque: 10 N·m (88 in·lbf)

Screw Maximum tightening torque: 5 N·m (45 in-lb)

Keys

See page 120

Notes

Wing style suitable for push-to-close action see page 166

For lock core selection and a complete overview of the *SOUTHCO*® Key-Choice System see page 190

Part Number Selection

Order latch and cam separately

Wing (Latch with Flat Cam shown)

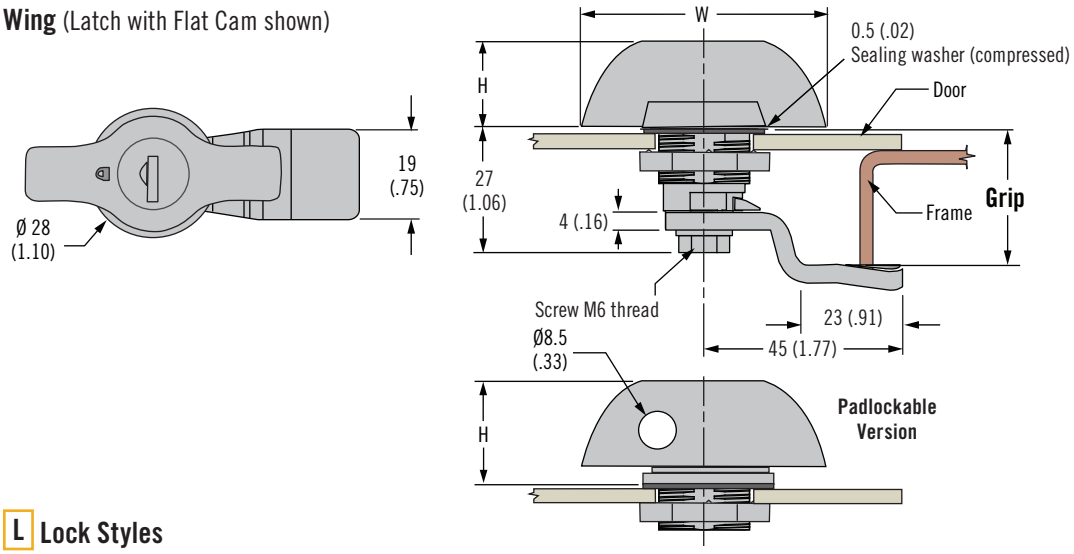

L Lock Styles

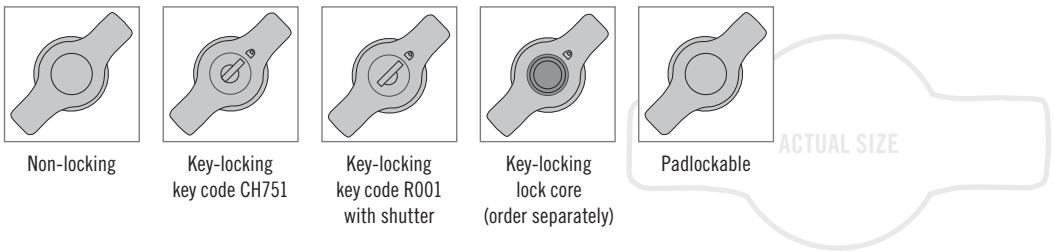

Non-locking

Key-locking key code CH751

Key-locking key code R001 with shutter

Key-locking lock core (order separately)

Padlockable

Latch Part Number (no cam)

Latch Part Number	Lock Style	H	W
E5-9-305-UU1	Non-locking	21 (.83)	56 (2.2)
E5-9-315-UU1-1 K	Key-locking black lock core keyed alike CH751	21 (.83)	56 (2.2)
E5-9-335-UU1	Without lock core, order lock core separately, see page 190	21 (.83)	56 (2.2)
E5-9-355-UU1-1 K	Key-locking stainless steel scalp and shuttered lock core keyed alike R001	23 (.91)	56 (2.2)
E5-9-375-UU1	Non-locking	16.3 (.64)	50 (1.97)
E5-9-515-UU1	Padlockable, Type A clockwise to latch	24 (.94)	56 (2.2)
E5-9-525-UU1	Padlockable, Type B counter-clockwise to latch	24 (.94)	56 (2.2)

Cam Part Number

E5 - 6 L G

L Lock style

0 Non-locking or Key-locking

1 Padlockable

K Key options

0 No keys supplied (order separately, see page 120)

3 1 Overmolded key supplied

G Grip

Grip	G	Grip	G	Grip	G	Grip	G
4 (.16)	03	14 (.55)	08	24 (.94)	13	34 (1.34)	18
6 (.24)	04	16 (.63)	09	26 (1.02)	14	36 (1.42)	19
8 (.31)	05	18 (.71)	10	28 (1.10)	15	38 (1.50)	20
10 (.39)	06	20 (.79)	11	30 (1.18)	16	40 (1.57)	21
12 (.47)	07	22 (.87)	12	32 (1.25)	17	42 (1.65)	22

E5 Cam Latch

Zinc · Flush cup wing style · Hand operated · Fixed grip

- **Low profile**
- **Multiple key code options**

Material and Finish

Zinc alloy, powder coated and steel, zinc plated

Performance Details

Maximum static load: 330 N (74 lbf)

Installation Notes

Mounting nuts 10-24 UNC (supplied)
Maximum tightening torque: 3 N·m (25 in·lbf)

Screw maximum tightening torque: 5 N·m (45 in-lb)

Keys

See page 121

Notes

Two point push-to-close action: Internal spring causes return of wing knob and actuator to original latched position when wing knob is released after opening. Ideal for use with cables and rotary latches.

For lock core selection and a complete overview of the *SOUTHCO*® Key-Choice System see page 190

Single Point

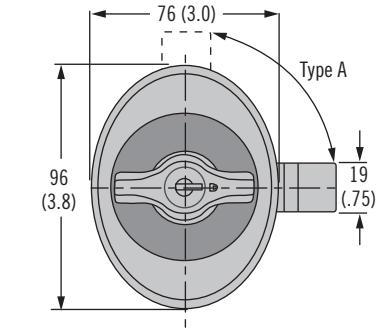

Two Point (for use with rods)

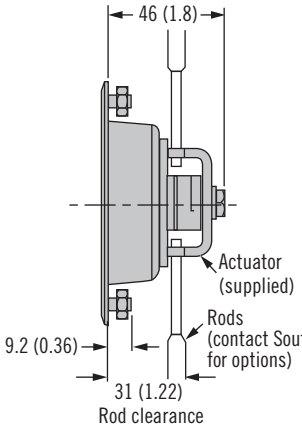

Two Point Push-to-Close Action
(spring-loaded)

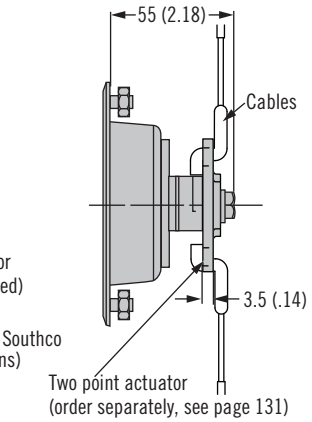

Maximum door thickness

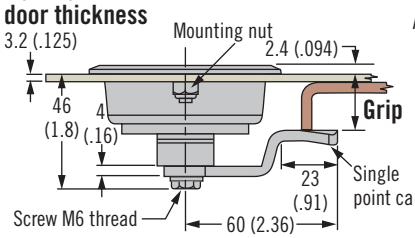

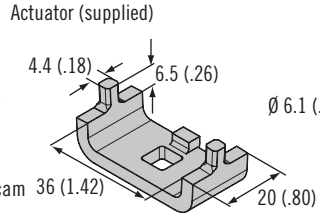

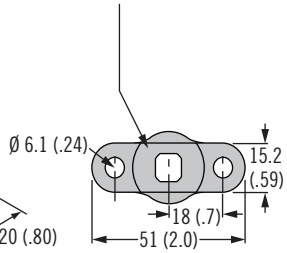

Type A (reverse frame for type B)

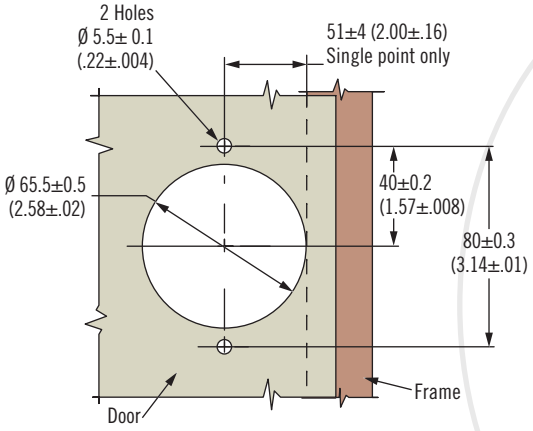

ACTUAL SIZE

Dimensions in millimeters (inch) unless otherwise stated

southco®

R Rotation

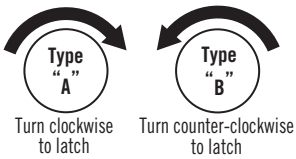

L Lock Styles

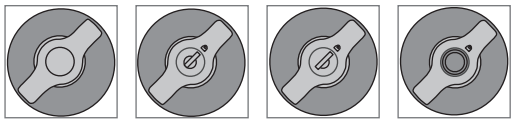

Latch Part Number (no cam)

E5 - 9 R - L 5 - A S - 1 K

S Sealing option
- **0** Non-sealing (when A = TR or TL)
- **1** Sealed (when A = UU or RR)

K Key options
- **0** No keys supplied (order separately, see page 121)
- **3** 1 Overmolded key supplied

A Assembly status
- **UU** Single point order cam separately
- **RR** Two point (for use with rods) - actuator supplied
- **TR** Type A two point push-to-close (order actuator separately)
- **TL** Type B two point push-to-close (order actuator separately)

R Rotation
- **1** Type A clockwise to latch
- **2** Type B counter-clockwise to latch

L Lock Style
- **30** Non-locking (omit last 2 digits from part number)
- **31** Key-locking black lock core keyed alike CH751
- **32** Key-locking stainless steel scalp and shuttered lock core keyed alike R001
- **33** Without lock core (omit last 2 digits from part number) Order lock core separately, see page 190

Cam Part Number Table (order separately from latch)			
Grip	Part Number	Grip	Part Number
22.7 (.89)	E5-6603	30.7 (1.21)	E5-6607
24.7 (.97)	E5-6604	32.7 (1.29)	E5-6608
26.7 (1.05)	E5-6605	34.7 (1.37)	E5-6609
28.7 (1.13)	E5-6606	36.7 (1.44)	E5-6610

If grip falls between two choices, use the smaller option

Part Number Selection

See table

Single point

Order latch and cam separately

Two point (for use with rods)

Order latch only
(two point actuator supplied)

Two point push-to-close action (spring loaded)

Order latch and actuator separately. Actuator part number A5-91-201-11, see page 172 for details.
To be used with *SOUTHCO*® R4 rotary series latches and cables see page 322.

E5 Cam Latch

Zinc · Push-to-close · Hand, key or tool operated · Single and two point

- **Single hole installation**
- **Latched / unlatched indicator**
- **Push-to-close action**

Material and Finish

Zinc alloy, powder coated and steel, zinc plated

Performance Details

Maximum static load: 330 N (74 lbf)

Installation Notes

Mounting nut maximum tightening torque: 10 N·m (88 in·lbf)

Screw Maximum tightening torque: 5 N·m (45 in·lbf) for two point actuator only

Keys and Accessories

See page 121 and 169-175

Notes

Single Point: Push-to-close action in unlocked position only and key inserted (cylinder lock)

Two Point: Order actuator separately (see page 172)

For lock core selection and a complete overview of the *SOUTHCO*® Key-Choice System see page 190

Actuator Part Number

See page 172 for details

Two point to be used with *SOUTHCO*® R4 rotary series latches and cables see page 322

Two point push to close action: Internal spring causes return of driver and actuator to original latched position when driver is released after opening. Ideal for use with cables and rotary latches.

Single Point Spring-Loaded (Type A tool operated shown)

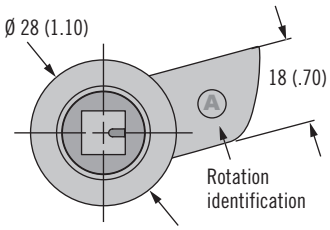

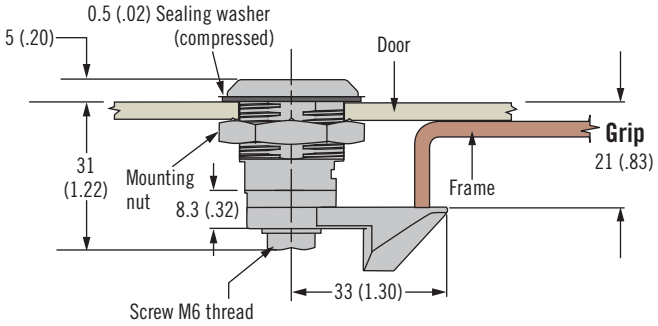

Operation

1. Push door towards frame

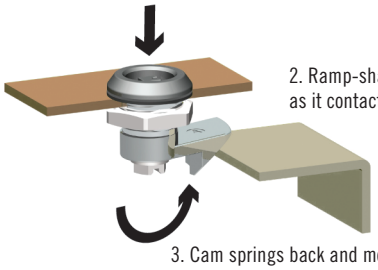

2. Ramp-shaped cam rotates as it contacts frame

3. Cam springs back and moves behind frame to achieve latching

ACTUAL SIZE

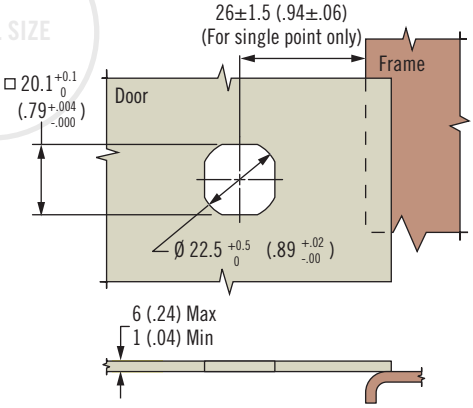

R Rotation

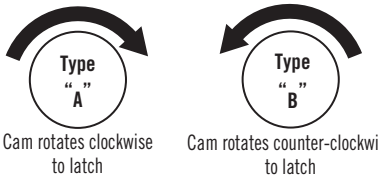

Two Point Spring-Loaded (Type A hand operated shown)

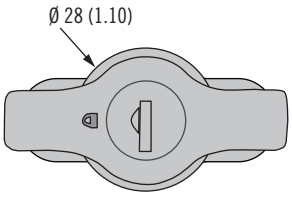

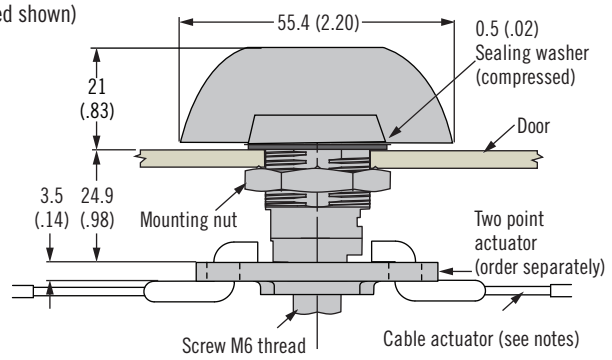

Two Point Actuator for bare cable

(order separately, see page 173)

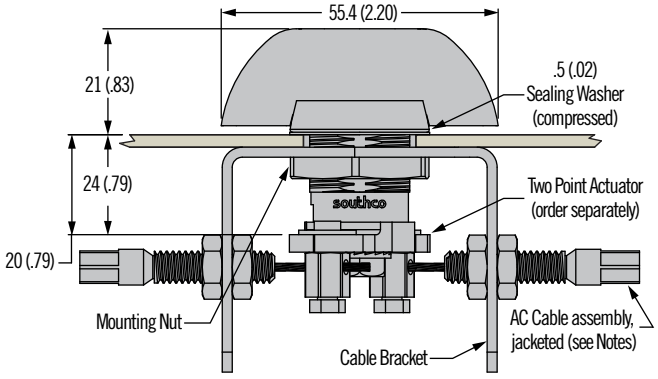

Dimensions in millimeters (inch) unless otherwise stated

Hand / Key Operated

Part Number Selection
Latch supplied fully assembled

F Finish
- **2** Bright chrome (not available for wing type)
- **5** Black powder coated

T Type
- **5** Cylinder lock keyed alike CH751
- **9** Wing / T-handle / L-handle

R Rotation
- **51** Type A single point (for visual identification cam stamped A or B)
- **52** Type B single point (for visual identification cam stamped A or B)
- **TR** Type A two point (order actuator separately)
- **TL** Type B two point (order actuator separately)

K Key options
- **0** No keys supplied (order separately, See page 121)
- **3** 1 Overmolded key supplied

E5 - T - L F - R 0 - 1 K

L

Lock style	T = 5	T = 9		
	Cylinder Lock	Wing	T-handle	L-handle
Non-locking (omit last two digits of part number)	~	30	60	70
Keyed CH751 (lock core finish matches handle finish)	~	31	61	71
Keyed CH751 (stainless steel scalp shuttered)	40	~	~	~
Keyed R001 reversible (stainless steel scalp shuttered)	~	32	62	72
Without lock core (omit last two digits of part number) (to be ordered separately see page 190)	~	33	63	73

Tool Operated

H Head Styles

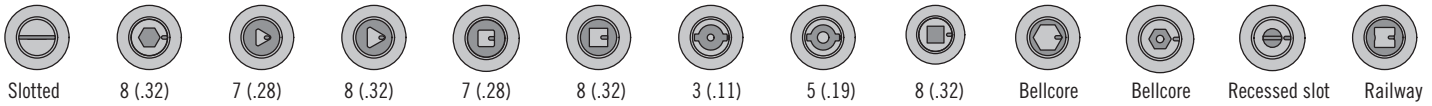

Slotted | 8 (.32) Hex recess | 7 (.28) Triangle | 8 (.32) Triangle | 7 (.28) Square | 8 (.32) Square | 3 (.11) Double bit | 5 (.19) Double bit | 8 (.32) Square recess | Bellcore 216 | Bellcore electronics | Recessed slot (tamper resistant) | Railway standard

Part Number Selection
Latch supplied fully assembled

F Finish
- **2** Bright chrome
- **5** Black powder coated

E5 - 6 - H F - R 0

H Head style
- **00** Slotted
- **01** 8 (.32) Hex recess
- **02** 7 (.28) Triangle
- **03** 8 (.32) Triangle
- **04** 7 (.28) Square
- **05** 8 (.32) Square
- **06** 3 (.11) Double bit
- **07** 5 (.19) Double bit
- **08** 8 (.32) Square recess
- **13** Bellcore 216
- **19** Bellcore electronics
- **21** Recessed slot (tamper resistant)
- **22** Railway standard

R Rotation
- **51** Type A single point (for visual identification, cam stamped A or B)
- **52** Type B single point (for visual identification, cam stamped A or B)
- **TR** Type A two point (order actuator separately)
- **TL** Type B two point (order actuator separately)

E5 Cam Latch

Zinc · Cylinder lock · Fixed grip

- **Single hole install**
- **Latched / unlatched indicator**

Material and Finish

Zinc alloy, powder coated and steel, zinc plated

Scalp stainless steel

Performance Details

Maximum static load: 330 N (74 lbf)

Installation Notes

Mounting nut maximum tightening torque: 10 N·m (88 in·lbf)

Screw Maximum tightening torque: 5 N·m (45 in·lbf)

Sealing Notes

NEMA 4 / IP65 achieved using gasket supplied

Keys and Accessories

See page 121 and 169-175

Notes

Suitable for push-to-close action see page 166.

See page 170 for cam part numbers

Part Number Selection

See table

Order latch and cam separately

Cylinder Lock

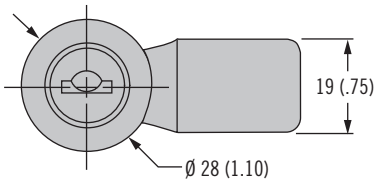

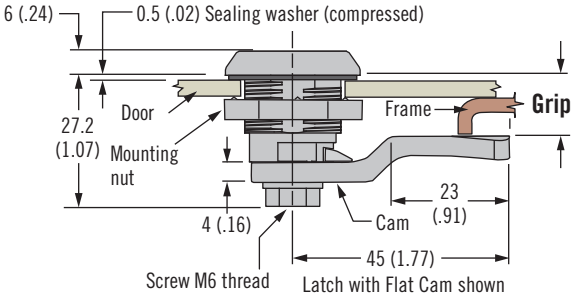

ACTUAL SIZE

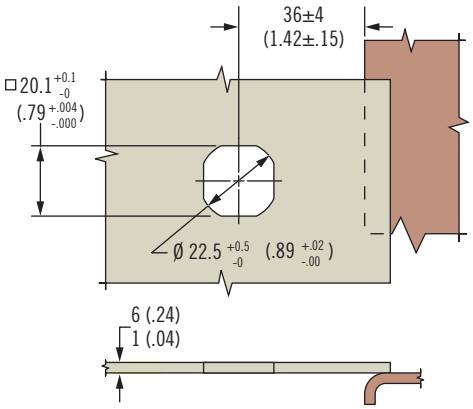

F **Finish**
- **2** Bright chrome
- **5** Black powder coated

K **Key options CH751**
- **0** No keys supplied (order separately, see page 121)
- **2** 2 Flat keys supplied

Latch Part Number
(no cam)

E5 - 5 - 40 F - UU1 - 1 K

Dimensions in millimeters (inch) unless otherwise stated

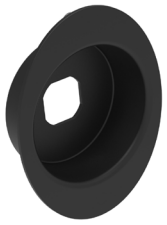

Flush Cup

D **Depth**
1 19 (.75) (for wingknob head style)
2 4 (.16) (for tool head style)

E5 - 2 M - 60 D - 5

M **Mounting Style**
0 M6 Studs
1 Through hole

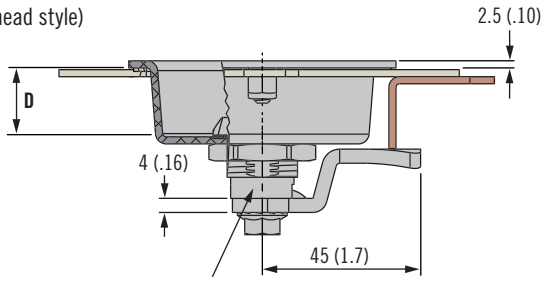

To calculate total grip, add cup depth (D) to latch grip

Material and Finish

Stainless steel or galvanized steel with rubber o-ring

Notes

For use with tool operated standard series cam latches, see pages 159, 163-168

See page 117 for additional dimensions

Flush Mount Bracket

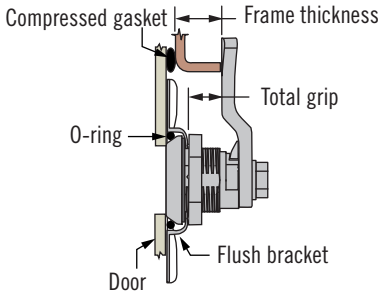

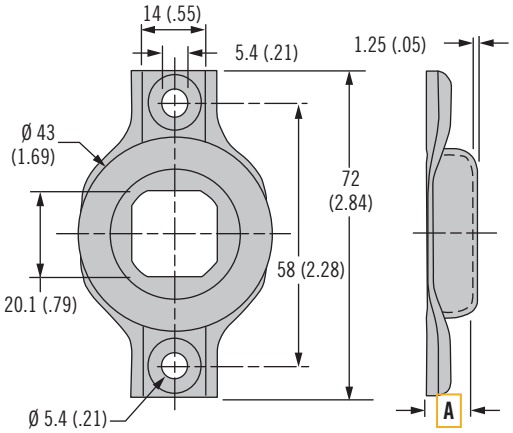

A	Part Number	Material
6.6	E5-77-1-12	Galvanized steel
6.6	E5-77-1-24	304 Stainless steel

To calculate the **Total Grip,** use the following formula: **Frame Thickness + Compressed Gasket - A**.
Use this **Total Grip** with the appropriate E5 tables in the *SOUTHCO®* Handbook to determine cam type.

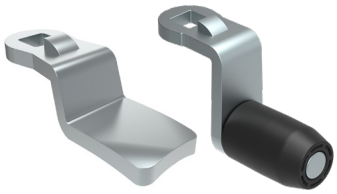

E5 Cam Latch Accessories

Cams

Material and Finish

Standard cam: steel
Roller cam: steel, nylon

Cam Options

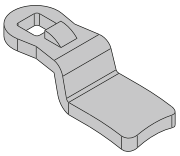

Standard Cam

- Stable frame engagement
- Improved surface contact
- Minimal frame surface prep

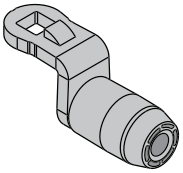

Roller Cam

- Reduce operating effort
- Minimize scratching frame finish
- Detented feel (with optional Keeper)

Optional Keeper for Roller Cam
Part number E5-74-601-33

Installation Notes

- Install cam to latch assembly. Properly orient for rotation and grip
- Install screw. Tighten to 5 N·m (44 in·lbf) MAX

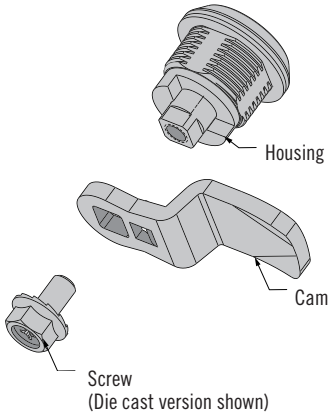

Part Number Selection

See table for cam part number
Order latch and cam separately
For latch part number, see pages 154-155

Short Housing Table

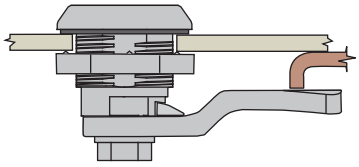

Cam Part Number Table (order separately from latch)											
Grip +2(.08) -0(.00)	Standard Cam Part Number	Roller Cam Part Number	Grip +2(.08) -0(.00)	Standard Cam Part Number	Roller Cam Part Number	Grip +2(.08) -0(.00)	Standard Cam Part Number	Roller Cam Part Number	Grip +2(.08) -0(.00)	Standard Cam Part Number	Roller Cam Part Number
4 (.16)	E5-6003	-	14 (.55)	E5-6008	-	24 (.94)	E5-6013	E5-7013	34 (1.34)	E5-6018	E5-7018
6 (.24)	E5-6004	-	16 (.63)	E5-6009	E5-7009	26 (1.02)	E5-6014	E5-6014	36 (1.42)	E5-6019	E5-7019
8 (.31)	E5-6005	-	18 (.71)	E5-6010	E5-7010	28 (1.10)	E5-6015	E5-7015	38 (1.50)	E5-6020	E5-7020
10 (.39)	E5-6006	-	20 (.79)	E5-6011	E5-7011	30 (1.18)	E5-6016	E507016	40 (1.57)	E5-6021	E5-7021
12 (.47)	E5-6007	-	22 (.87)	E5-6012	E5-7012	32 (1.25)	E5-6017	E5-7017	42 (1.65)	E5-6022	E5-7022

If grip falls between two choices, use the smaller options

Dimensions in millimeters (inch) unless otherwise stated

E5 Cam Latch Accessories

Cams

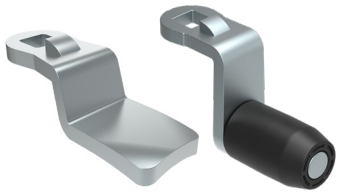

Long Housing Table

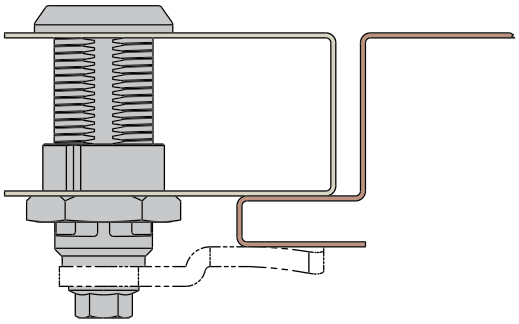

E5 - 6A - H F - UU D

D	Door Thickness	Grip Range
1	1-18 (.04-.71)	5-53 (.20-2.09)
2	1-18 (.04-.71)	54-82 (2.13-3.23)
3	18-33 (.71-1.30)	18-66 (.71-2.60)
4	18-33 (.71-1.30)	68-82 (2.60-3.23)
5	33-51 (1.30-2.00)	34-82 (1.34-3.23)

Material and Finish

Standard cam: steel
Roller cam: steel, nylon

Part Number Selection

See table for cam part number
Order latch and cam separately
For latch part number, see pages 154-155

Cam Part Number Table (order separately from latch)

D	Grip +2 (.08) -0 (.00)	Standard Cam Part Number	Roller Cam Part Number	Grip +2 (.08) -0 (.00)	Standard Cam Part Number	Roller Cam Part Number	Grip +2 (.08) -0 (.00)	Standard Cam Part Number	Roller Cam Part Number	Grip +2 (.08) -0 (.00)	Standard Cam Part Number	Roller Cam Part Number	Grip +2 (.08) -0 (.00)	Standard Cam Part Number	Roller Cam Part Number
1	5 (.2)	E5-6028	-	15 (.59)	E5-6023	-	25 (.98)	E5-6005	-	35 (1.38)	E5-6010	E5-7010	45 (1.77)	E5-6015	E5-7015
	7 (.28)	E5-6027	-	17 (.67)	E5-6001	-	27 (1.06)	E5-6006	-	37 (1.46)	E5-6011	E5-7011	47 (1.85)	E5-6016	E5-7016
	9 (.35)	E5-6026	-	19 (.75)	E5-6002	-	29 (1.14)	E5-6007	-	39 (1.54)	E5-6012	E5-7012	49 (1.93)	E5-6017	E5-7017
	11 (.43)	E5-6025	-	21 (.83)	E5-6003	-	31 (1.22)	E5-6008	-	41 (1.61)	E5-6013	E5-7013	51 (2.01)	E5-6018	E5-7018
	13 (.51)	E5-6024	-	23 (.91)	E5-6004	-	33 (1.3)	E5-6009	E5-7009	43 (1.69)	E5-6014	E5-7014	53 (3.07)	E5-6019	E5-7019
2	54 (2.13)	E5-6108	-	60 (2.36)	E5-6111	E5-7111	66 (2.6)	E5-6114	E5-7114	72 (2.83)	E5-6117	E5-7117	78 (3.07)	E5-6120	E5-7120
	56 (2.2)	E5-6109	E5-7109	62 (2.44)	E5-6112	E5-7112	68 (2.68)	E5-6115	E5-7115	74 (2.91)	E5-6118	E5-7118	80 (3.15)	E5-6121	E5-7121
	58 (2.28)	E5-6110	E5-7110	64 (2.52)	E5-6113	E5-7113	70 (2.76)	E5-6116	E5-7116	76 (2.99)	E5-6119	E5-7119	82 (3.23)	E5-6122	E5-7122
3	18 (.71)	E5-6128	E5-7118	28 (1.1)	E5-6123	E5-7113	38 (1.5)	E5-6105	-	48 (1.89)	E5-6110	E5-7110	58 (2.28)	E5-6115	E5-7115
	20 (.79)	E5-6127	E5-7117	30 (1.18)	E5-6101	E5-7112	40 (1.57)	E5-6106	-	50 (1.97)	E5-6111	E5-7111	60 (2.36)	E5-6116	E5-7116
	22 (.87)	E5-6126	E5-7116	32 (1.26)	E5-6102	E5-7111	42 (1.65)	E5-6107	-	52 (2.05)	E5-6112	E5-7112	62 (2.44)	E5-6117	E5-7117
	24 (.94)	E5-6125	E5-7115	34 (1.34)	E5-6103	E5-7110	44 (1.73)	E5-6108	-	54 (2.13)	E5-6113	E5-7113	64 (2.52)	E5-6118	E75-7118
	26 (1.02)	E5-6124	E5-7114	36 (1.42)	E5-6104	E5-7109	46 (1.81)	E5-6109	E5-7109	56 (2.2)	E5-6114	E5-7114	66 (2.6)	E5-6119	E5-7119
4	66 (2.6)	E5-6114	E5-7114	70 (2.76)	E5-6116	E5-7116	74 (2.91)	E5-6118	E5-7118	78 (3.07)	E5-6120	E5-7120	82 (3.23)	E5-6122	E5-7122
	68 (2.68)	E5-6115	E5-7115	72 (2.83)	E5-6117	E5-7117	76 (2.99)	E5-6119	E5-7119	80 (3.15)	E5-6121	E5-7121	-	-	-
5	34 (1.34)	E5-6125	E5-7115	44 (1.73)	E5-6103	E5-7110	54 (2.13)	E5-6108	-	64 (2.52)	E5-6113	E5-7113	74 (2.91)	E5-6118	E5-7118
	36 (1.42)	E5-6124	E5-7114	46 (1.81)	E5-6104	E5-7109	56 (2.2)	E5-6109	E5-7109	66 (2.6)	E5-6114	E5-7114	76 (2.99)	E5-6119	E5-7119
	38 (1.5)	E5-6123	E5-7113	48 (1.89)	E5-6105	-	58 (2.28)	E5-6110	E5-7110	68 (2.68)	E5-6115	E5-7115	78 (3.07)	E5-6120	E5-7120
	40 (1.57)	E5-6101	E5-7112	50 (1.97)	E5-6106	-	60 (2.36)	E5-6111	E5-7111	70 (2.76)	E5-6116	E5-7116	80 (3.15)	E5-6121	E5-7121
	42 (1.65)	E5-6102	E5-7111	52 (2.05)	E5-6107	-	62 (2.44)	E5-6112	E5-7112	72 (2.83)	E5-6117	E5-7117	82 (3.23)	E5-6122	E5-7122

If grip falls between two choices, use the smaller options

E5 Cam Latch Accessories

Multi-point actuators · Dummy cam

Material and Finish
Zinc alloy

Notes
Actuator plate (for multi-point see page 322 for cable assembly)
(Not recommended for Cylinder Lock version)

Not to be used with low profile E5

Multi-Point Actuator

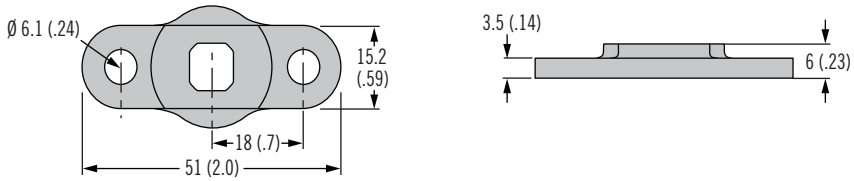

Part Number
A5-91-201-11

Material and Finish
Steel, plated

Notes
Actuator plate (for multi-point see pages 230-231 for rods)

For use with all E5 latches

Multi-Point Actuator - Low Profile

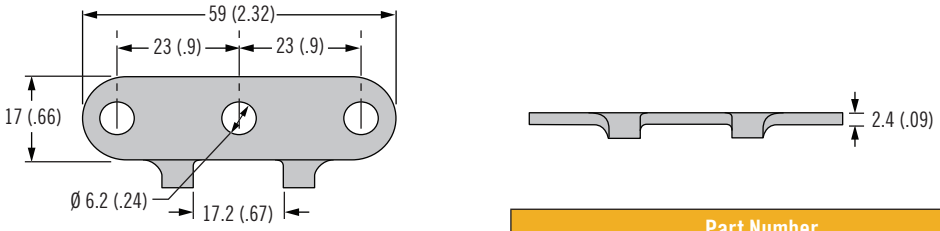

Part Number
A8-4-01-03

Material and Finish
Zinc alloy and steel, zinc plated

Notes
Actuator plate (for multi-point see page 230 for rods)

Not to be used with low profile E5

Multi-Point Actuator

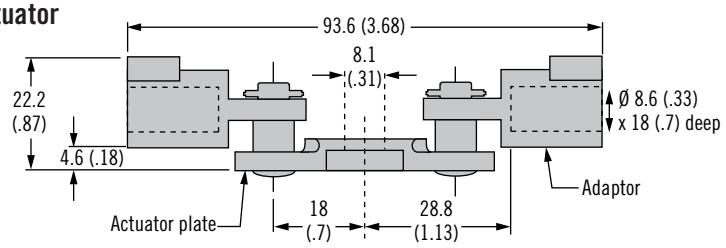

Part Number
A5-90-101-11

Material and Finish
Steel, stainless steel

Notes
Replaces cam when used with actuator plate A5-90-101-11 in order to create a 2-point latching system

Dummy Cam

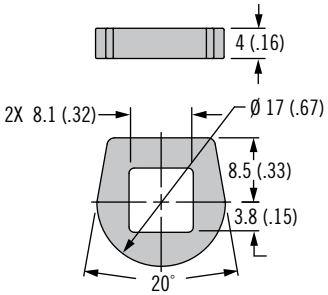

Part Number	
Steel	H3-0-45688
Stainless Steel	H3-0-45688-24

Dimensions in millimeters (inch) unless otherwise stated

Hooked Cam

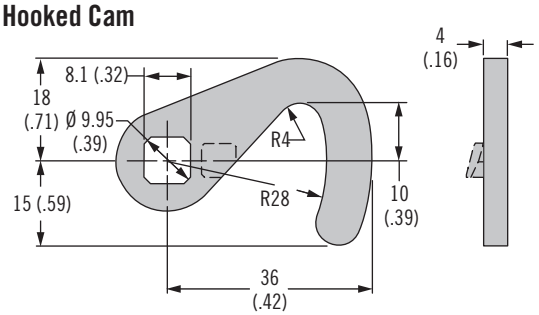

Hooked Cam Part Number	
E5-6200	No stop
E5-6210	Stop for clockwise rotation
E5-6220	Stop for counter-clockwise rotation

Multi-Point Actuator

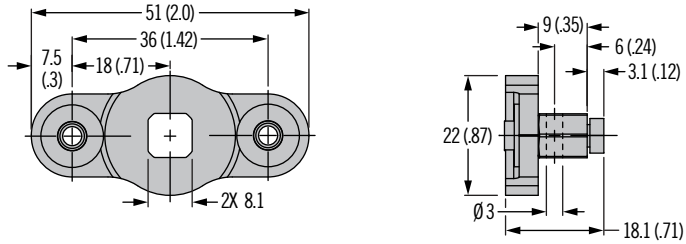

Part Number
A5-99-136

Cable Bracket – Counter Clockwise Rotation

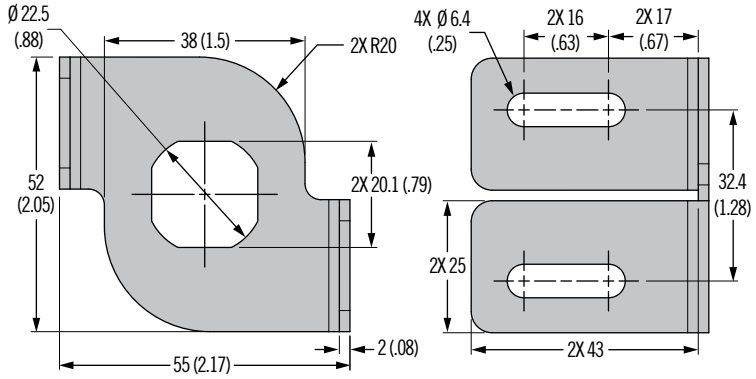

Part Number
AC-0-49617-11-L

Cable Bracket – Clockwise Rotation

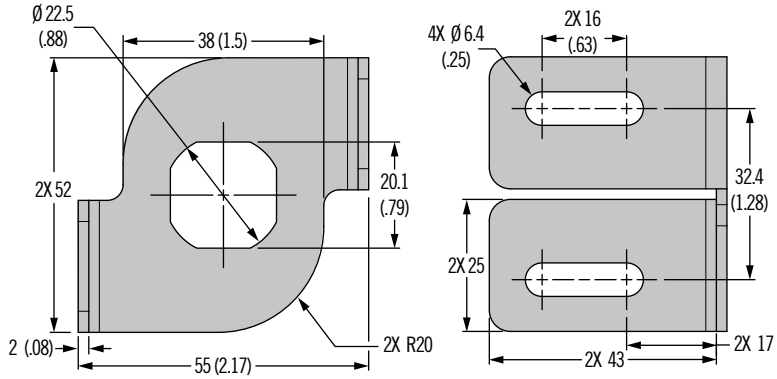

Part Number
AC-0-49617-11-R

Material and Finish

Steel plated
Hook cam: Steel, plated
Multi-point actuator: Zinc alloy, plated
Cable bracket: Steel, plated

Notes

Not to be used with low profile E5

Notes

Use Type B latch with bracket ending in -L and Type A with bracket ending in -R

Part Number

See table

Notes

See page 322 for additional cable assembly selections

E5 Cam Latch and **E9** Compression Latch Accessories

Pull tab · Padlock bracket

Material and Finish

Padlock bracket: Stainless steel, black powder coated

Pull tab: Nylon, black

Installation Notes

To provide sealing: use two sealing washers and add compressed thickness of each washer and accessory thickness to your **door thickness range**.

Notes

Padlock brackets and pull tabs for use with E9 or tool operated and cylinder lock E5.

Part Number

See table

Padlock Bracket (Square)

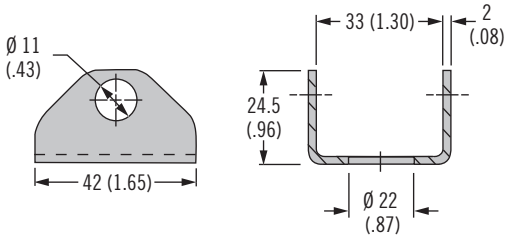

Padlock Bracket (Round)

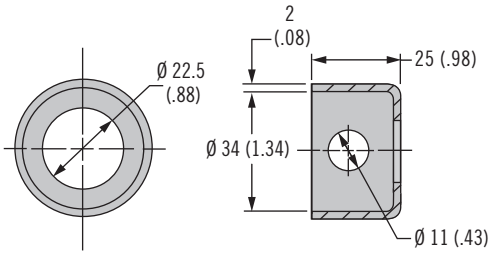

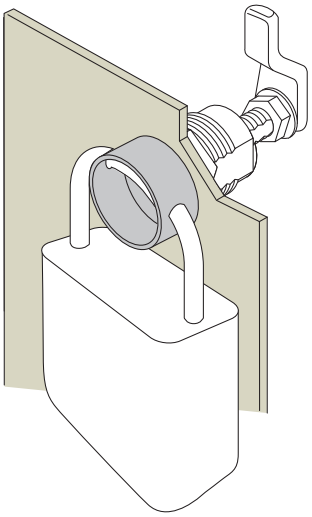

Pull Tab

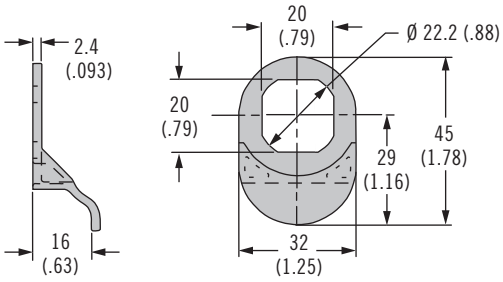

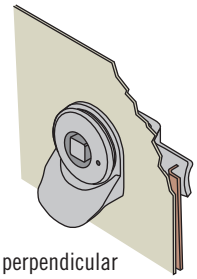

Shown perpendicular to latch cam

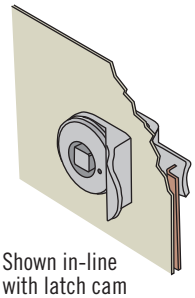

Shown in-line with latch cam

Type	Part Number	Grip Adjustment Formula
Padlock bracket square	E3-77-101-31	Add 2 (.08) to door thickness
Padlock bracket round	E3-77-102-31	Add 2 (.08) to door thickness
Pull tab	E5-18	Add 2.4 (.093) to door thickness

Dimensions in millimeters (inch) unless otherwise stated

E5 Cam Latch and **E9** Compression Latch Accessories

Sealing cover · Sealing washer

Sealing Washer

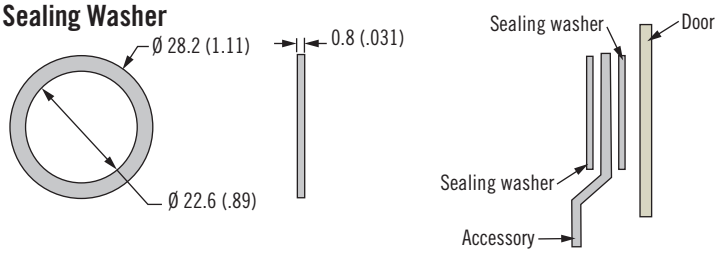

Sealing Cover - Plastic

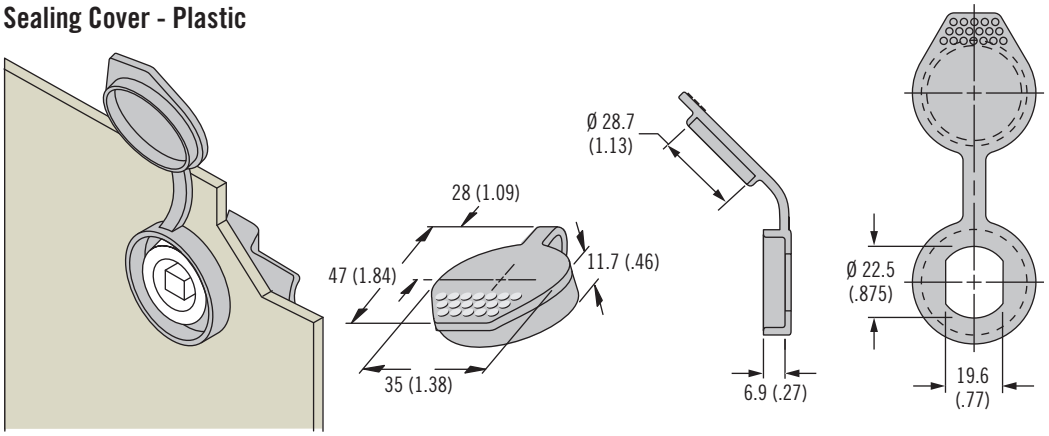

Bi-Stable Sealing Cover - Stainless Steel

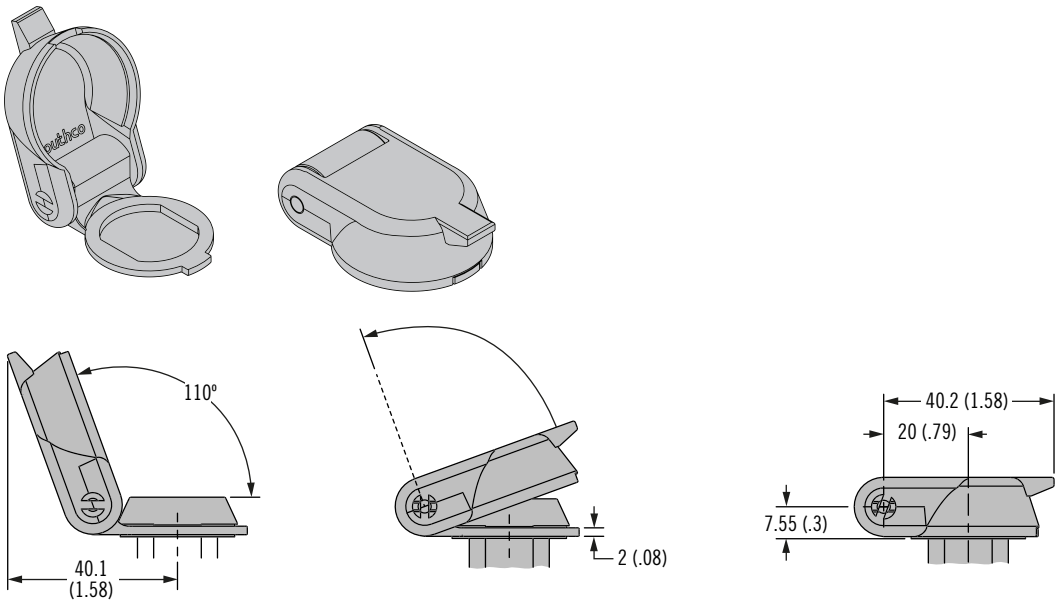

Type	Part Number	Grip Adjustment Formula
Sealing Washer	E5-17	Add 0.4 (.02) compressed height to door thickness
Sealing Cover – Plastic	90-3	Add 2.3 (.090) to door thickness
Bi-Stable Sealing Cover – Stainless Steel	E3-80-262-40	Add 2.0 (0.8) to door thickness

Material and Finish

Sealing washer: Neoprene natural

Sealing cover: Thermoplastic elastomer, black or stainless steel, electropolished

Installation Notes

To provide sealing: use two sealing washers and add compressed thickness of each washer and accessory thickness to your door thickness range.

Notes

Sealing washer for use with all E5 and E9 products

Sealing cover for use with E9 or tool operated and cylinder lock E5

Part Number

See table

92 Cam Latch

T and L-Handle · Adjustable grip

- **Round hole install**
- **Detents in open and closed position**

Material and Finish

Zinc alloy and steel, zinc plated

Performance Details

Maximum static load:
Short cam 400 N (90 lbf)
Long cam 200 N (45 lbf)

Installation Notes

Screw and lockwasher assembly M4 x 10 (supplied).
For door thickness > 3.0 (.12), calculate screw length using the following formula:
Door thickness + 7.00 (.28)

Keys

See page 121

Notes

For fixed grip versions see page 162

For version with 8 (.32) square shaft see page 185

T-Handle

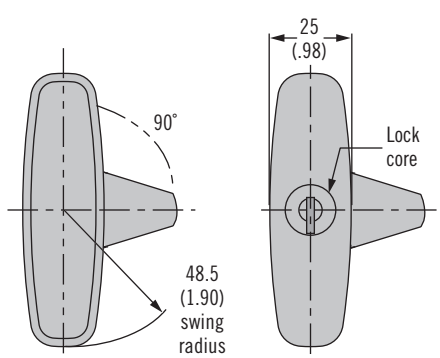

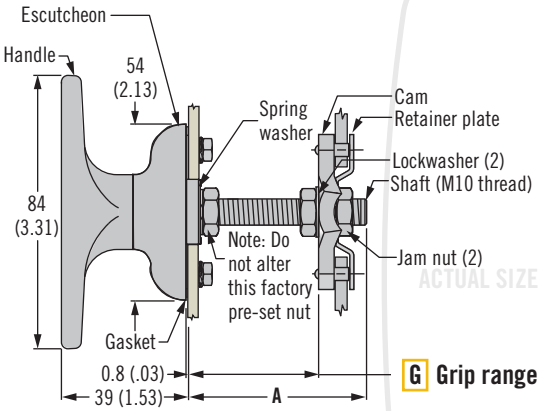

L-Handle

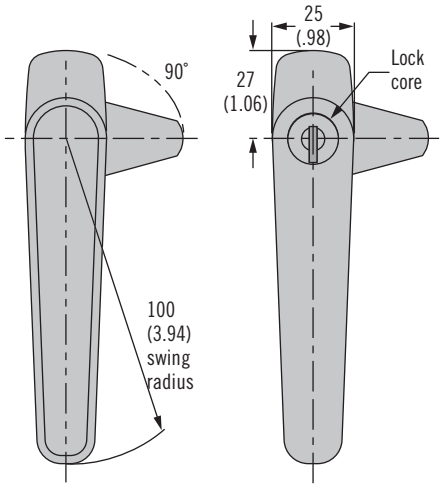

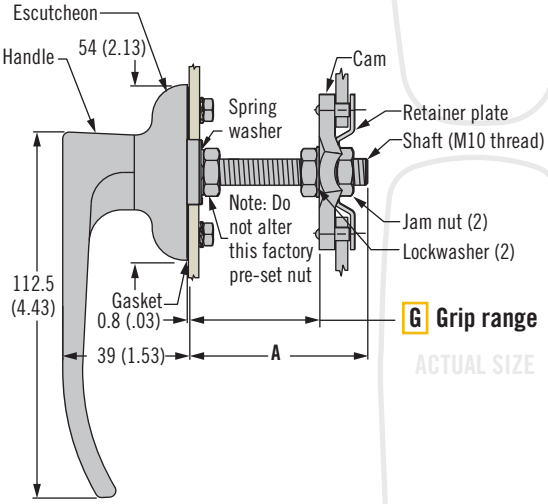

Cam (supplied)

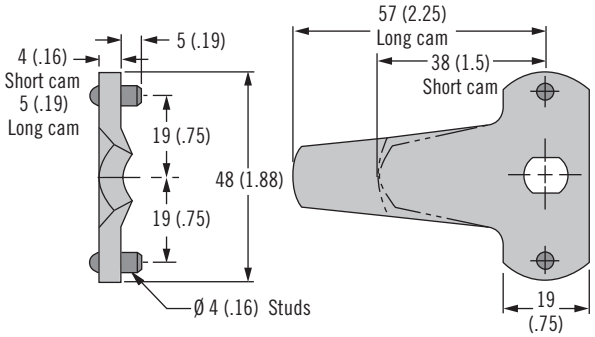

Retainer Plate (supplied)

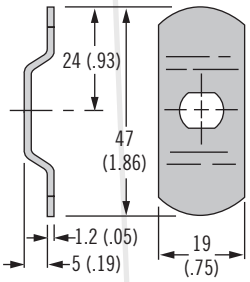

Dimensions in millimeters (inch) unless otherwise stated

southco®

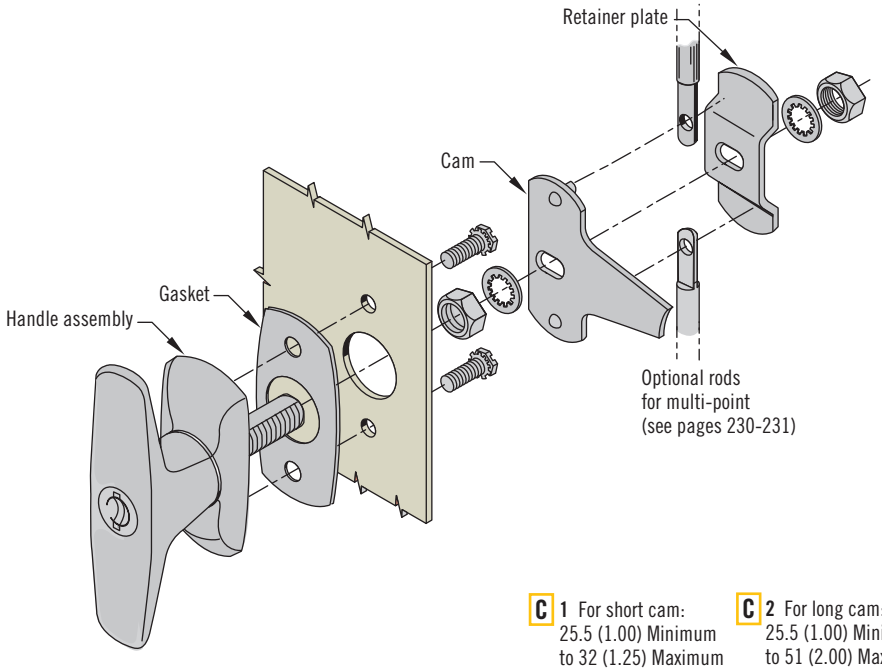

C **1** For short cam:
25.5 (1.00) Minimum
to 32 (1.25) Maximum

C **2** For long cam:
25.5 (1.00) Minimum
to 51 (2.00) Maximum

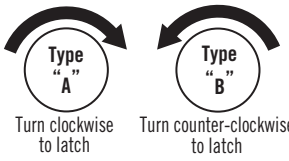

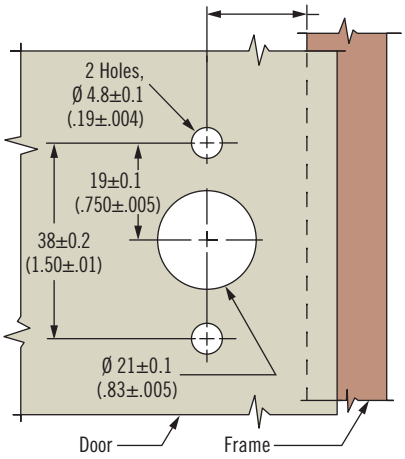

Part Number Selection

See table

R **Rotation**
1 Type A clockwise to latch
2 Type B counter-clockwise to latch

F **Finish**
1 Bright chrome
5 Black powder coated

C **Cam**
1 Short 38 (1.5)
2 Long 57 (2.25)

92 - L R - F G C

L **Lock style**
1 T-handle non-locking
2 T-handle key-locking CH751 (two keys supplied)
3 L-handle non-locking
4 L-handle key-locking CH751 (two keys supplied)

G Grip	Minimum	Maximum	A
1	16 (.63)	19 (.75)	32 (1.25)
2		32 (1.25)	44.5 (1.75)
3		44.5 (1.75)	57.5 (2.25)

68 Cam Latch

Small · T-Handle · Adjustable grip

- **Robust design**

Material and Finish

Zinc alloy and steel, zinc plated

Performance Details

Maximum static load:
1100 N (250 lbf)

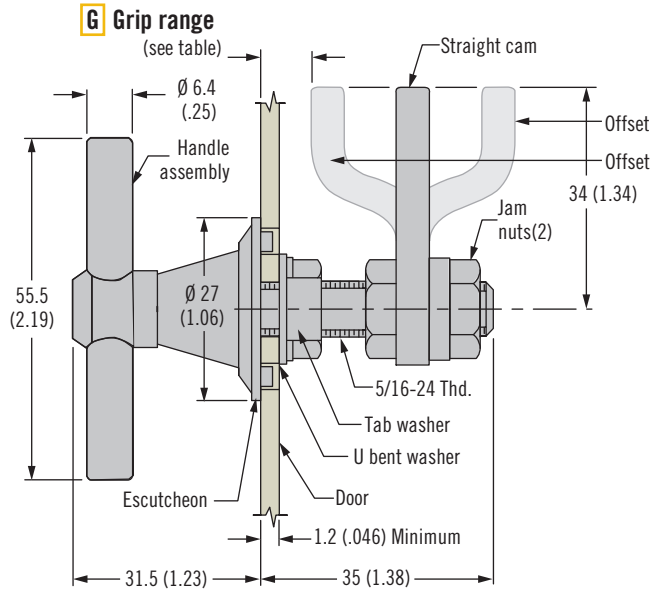

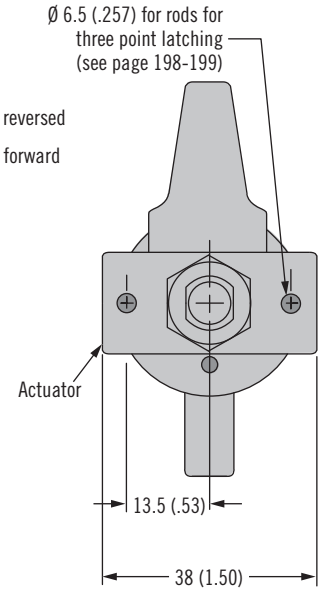

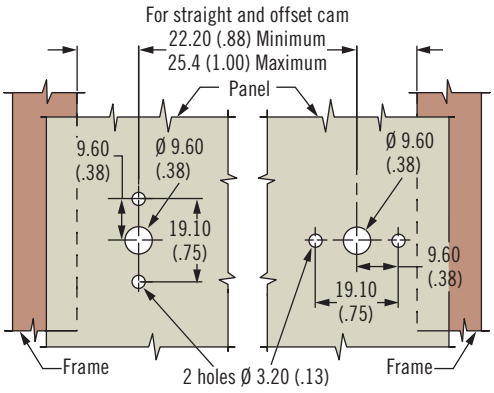

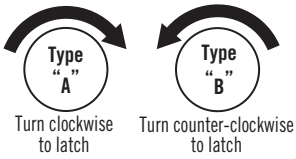

Part Number Selection

See table

68 - 50 - 30 G - F

G Grip	Minimum	Maximum	Cam Type
1	0 (0)	12.7 (.50)	Offset cam forward position
	25.4 (1.00)	38 (1.50)	Offset cam reversed position
2	12.7 (.50)	25.4 (1.00)	Straight cam

F Finish

10 Zinc plate bright chromate
20 Chrome plated

Dimensions in millimeters (inch) unless otherwise stated

68 Cam Latch

Medium · T-Handle · Adjustable grip

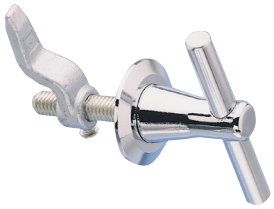

- **Robust design**
- **Optional internal actuation**

Material and Finish

Zinc alloy and steel, zinc plated

Performance Details

Maximum static load:
1100 N (250 lbf)

Installation Notes

T-handle orientation and operation:

1. Handle parallel to the edge of door when latched.

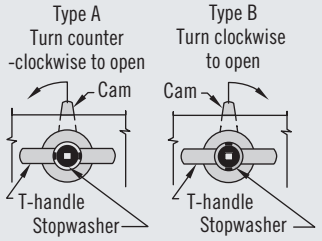

2. Handle perpendicular to edge of door when latched.

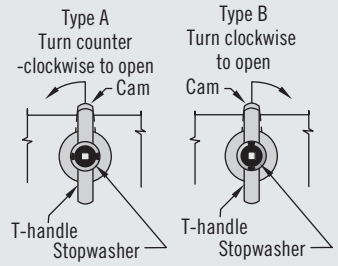

Part Number Selection

See table

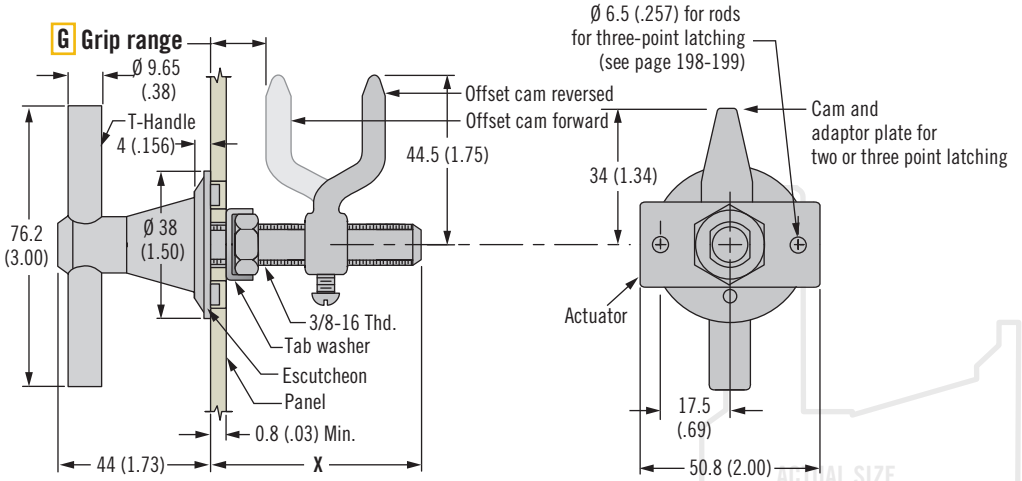

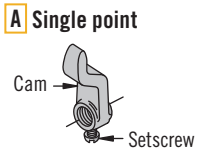

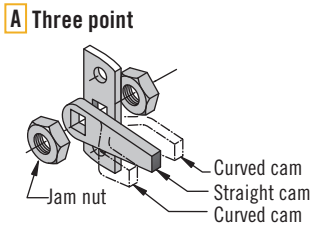

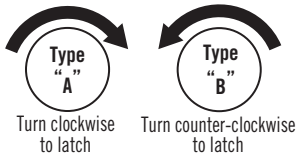

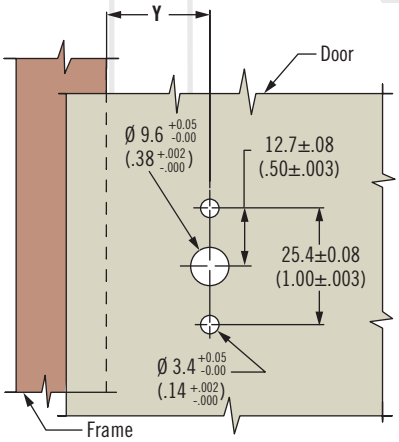

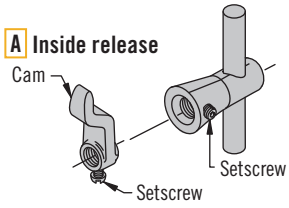

A Assembly
- **1** Single point
- **3** Three point
- **4** Inside release

68 - 10 - A 0 G - F

F Finish
- **10** Zinc plate bright chromate
- **20** Chrome plated

Assembly	G Grip	Grip Range		X	Y	Cam Type
		Minimum	Maximum			
Single point	1	3.2 (.13)	25.4 (1.00)	46.4 (1.83)	31.8±3.2 (1.25±.13)	Offset cam forward position
		25.4 (1.00)	50.8 (2.00)			Offset cam reversed position
Three point	1	1.6 (.06)	19.8 (.78)		28.6±1.6 (1.13±.06)	Offset cam forward position
		27 (1.06)	45.2 (1.78)			Offset cam reversed position
	2	14.3 (.56)	32.5 (1.28)			Straight cam
Inside release	1	3.2 (.13)	25.4 (1.00)	65 (2.56)	31.8±3.2 (1.25±.13)	Offset cam forward position
		25.4 (1.00)	50.8 (2.00)			Offset cam reversed position

68 Cam Latch

Medium · Folding bail handle · Adjustable grip

- **Robust design**
- **90° rotation**

Material and Finish

Zinc alloy and steel, zinc plated

Performance Details

Maximum static load
890 N (200 lbf)

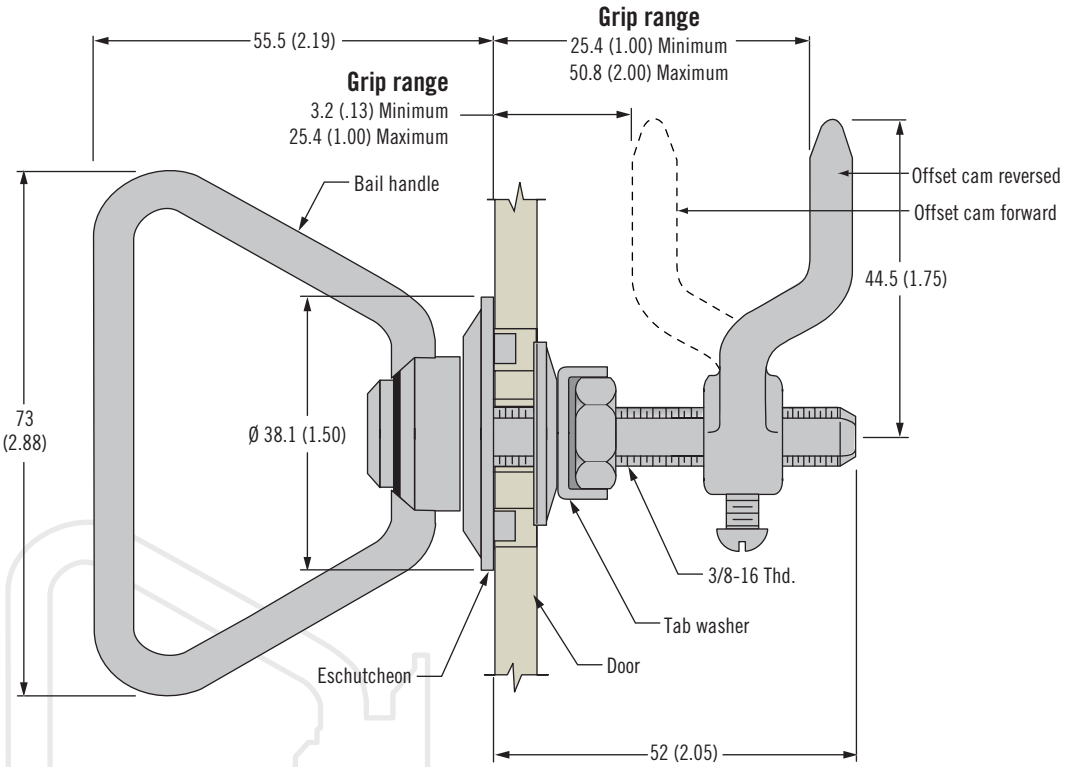

Bail Handle Orientation and Operation

(Shown in latched position)

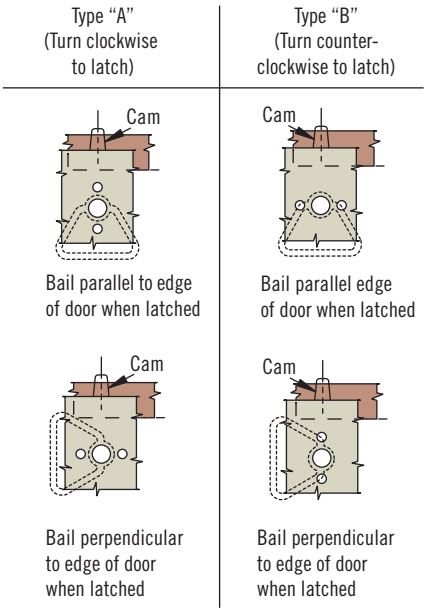

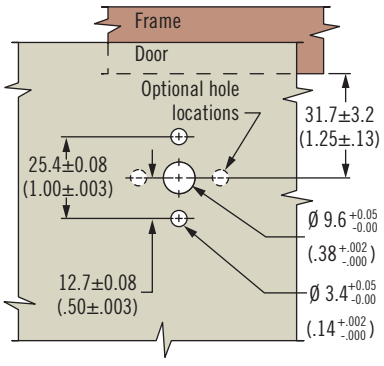

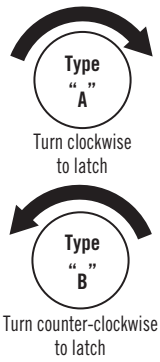

Part Number Selection

See table

68 - 20 - 101 - F

F Finish
10 Zinc plate bright chromate
20 Chrome plated

Dimensions in millimeters (inch) unless otherwise stated

southco®

68 Cam Latch

Large · T-Handle · Adjustable grip

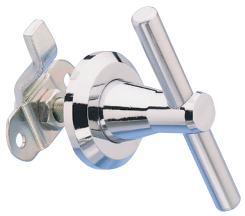

- **Robust construction**
- **90° movement**

Material and Finish

Zinc alloy and steel, zinc plated

Performance Details

Maximum static load:
1300 N (300 lbf)

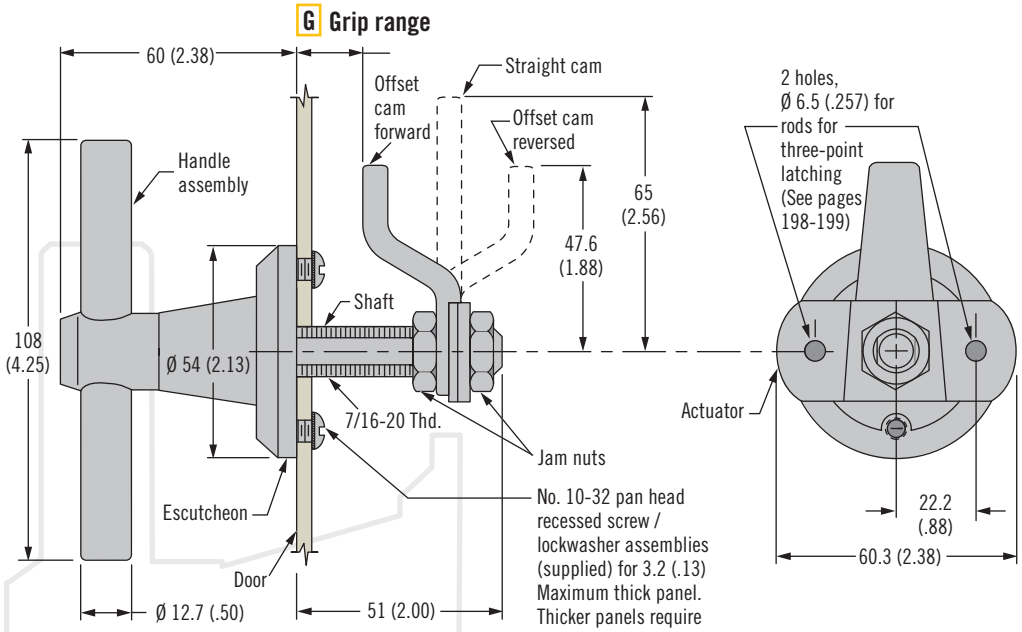

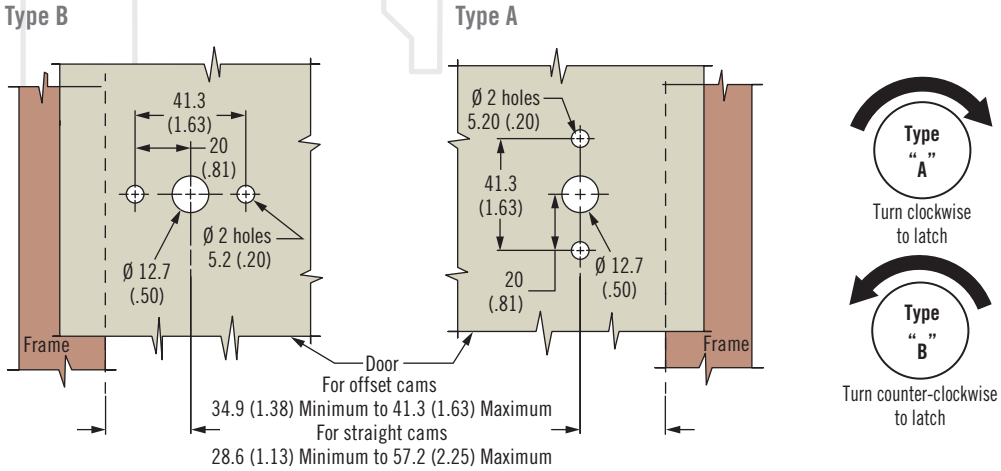

Part Number Selection

See table

68 - 70 - 30 G - F

F Finish
10 Zinc plate bright chromate
20 Chrome plated

G Grip	Minimum	Maximum	Cam Type
1	0 (0)	19 (.75)	Offset cam forward position
	25.4 (1.00)	57 (2.25)	Offset cam reversed position
2	6.4 (.25)	38 (1.50)	Straight cam

01 Cam Latch

Small · Flush handle · Cup style · Adjustable grip

- **Low profile design**

Material and Finish

ABS, zinc and steel, zinc plated

Performance Details

Maximum static load: 160 N (35 lbf)

Flammability rating: UL94-HB

Notes

For multi-point latching options see page 208

For fixed grip version see p164

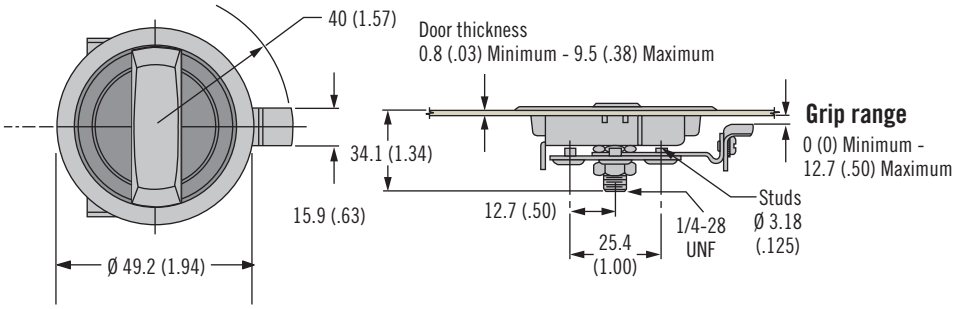

Type A (shown)

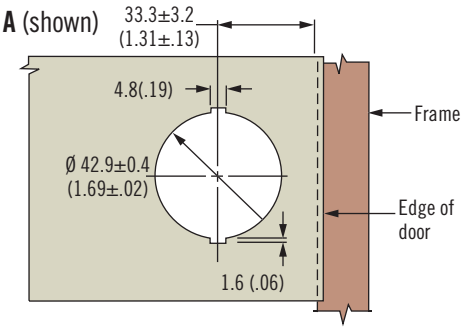

ACTUAL SIZE

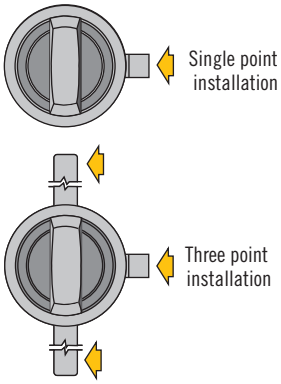

Type A Assemblies (Turn handle clockwise to latch)

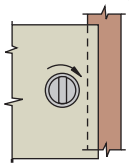

Handle shown **parallel** to edge of door when latched

Type B Assemblies (Turn handle counter-clockwise to latch)

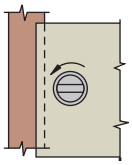

Handle shown **perpendicular** to edge of door when latched

- Mounted on either type A or B doors.
Choose horizontal or vertical closed position of handle

Part Number Selection

See table

01 - 10 - 40 R - F

F **Finish**
- **10** Bright chrome
- **65** Black

R **Rotation**
- **1** Type B counter-clockwise to latch for **parallel** installation
- **2** Type B counter-clockwise to latch for **perpendicular** installation
- **1** Type A clockwise to latch for **perpendicular** installation
- **2** Type A clockwise to latch for **parallel** installation

Dimensions in millimeters (inch) unless otherwise stated

01 Cam Latch

Medium · Flush and bail handle · Cup style · Adjustable grip

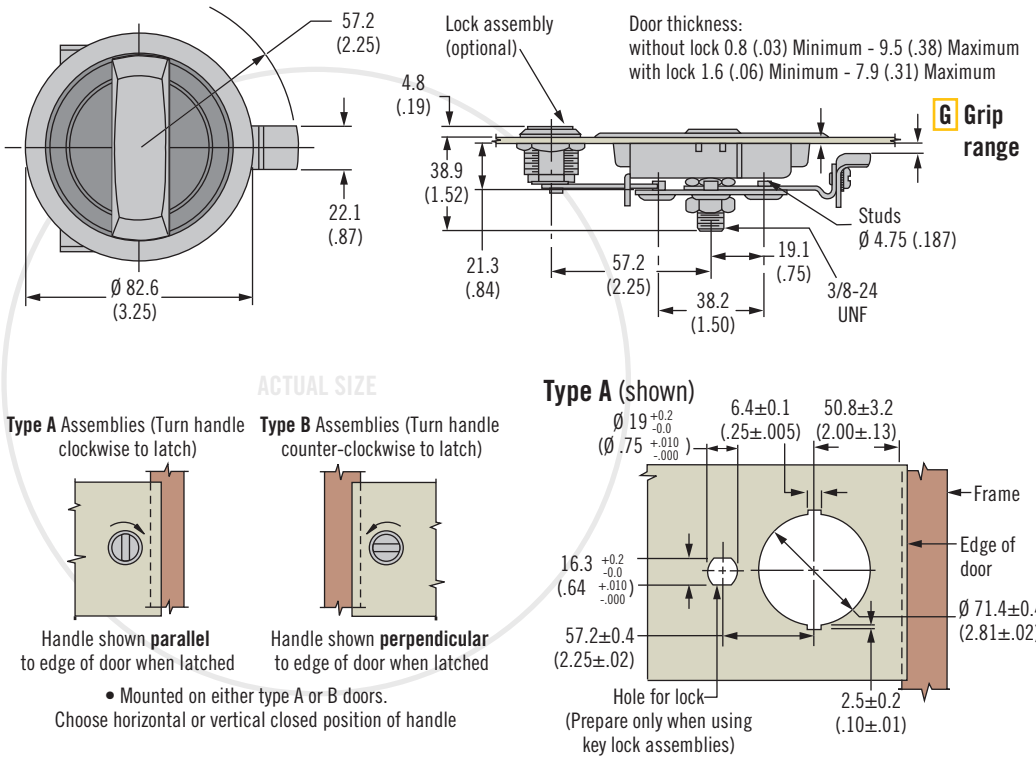

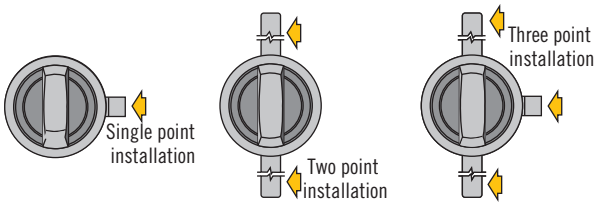

- **Low profile design**

Material and Finish

ABS, zinc and steel, zinc plated

Performance Details

Maximum static load: 220 N (50 lbf)

Flammability rating UL94-HB

Keys

See page 121

Notes

For multi-point latching options see page 208

For fixed grip version see page 164

Part Number Selection

See table

L Lock style

1 Non-locking flat handle
2 Non-locking folding bail handle
3 Locking flat handle keyed alike CH751 (two keys supplied)
4 Locking folding bail handle keyed alike CH751 (two keys supplied)

01 - L 3 - G F

F Finish

1 Bright chrome
5 Black

G Grip	Grip Range	Type A	Type B	Cam Type
1	0 - 12.7 (0 - .50)	Perpendicular	Parallel	Single or three point latching
2	0 - 12.7 (0 - .50)	Parallel	Perpendicular	Single or three point latching
3	12.7 - 28.6 (.50 - 1.13)	Perpendicular	Parallel	Single or three point latching
4	12.7 - 28.6 (.50 - 1.13)	Parallel	Perpendicular	Single or three point latching
5	Two point only	Perpendicular	Parallel	Two point only
6	Two point only	Parallel	Perpendicular	Two point only

24 Cam Latch

Flush T-handle · Adjustable grip

- **Concealed mounting type**

Material and Finish

Zinc alloy and steel, zinc plated or stainless steel

Performance Details

Maximum static load:
445 N (100 lbf)

Installation Notes

Maximum tightening torque of mounting nuts not to exceed
2.8 N·m (25 in·lbf)

Keys

See page 121

www.southco.com/24

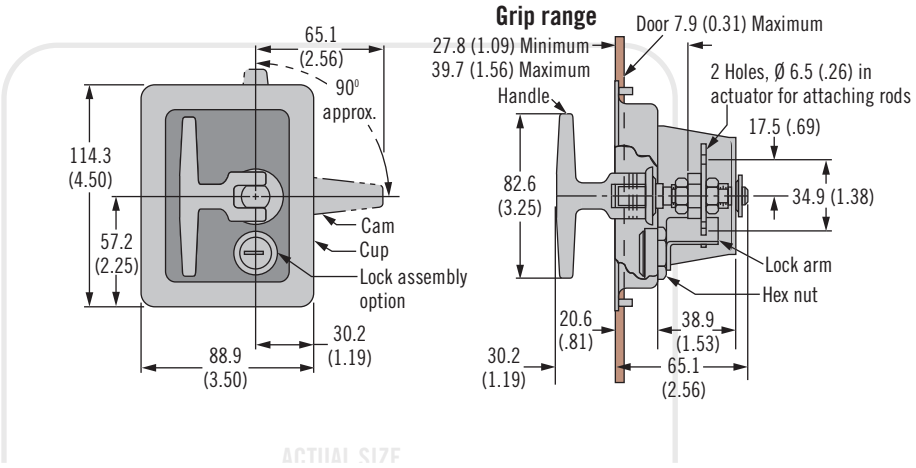

Style	Part Number	
	With Mounting Studs	
	Cup and bracket polished stainless steel. Handle zinc chrome plated	Cup and bracket steel dacrotized. Handle zinc dacrotized
Locking keyed alike CH751 supplied	24-20-812-35	24-20-812-10
Non-locking	24-20-302-35	24-20-302-10
Non-locking environmentally sealed	24-20-312-35	24-20-312-10

69 Cam Latch

Arrowhead · Detent design · Adjustable grip

- **Arrow indicates cam orientation**
- **Single hole installation**
- **Detented design**
- **Adjustable grip**

Material and Finish

Nylon and steel, zinc plated

Performance Details

Small size working load:
44 N (10 lbf)
Medium size working load:
220 N (50 lbf)
Large size working load:
330 N (75 lbf)

www.southco.com/69

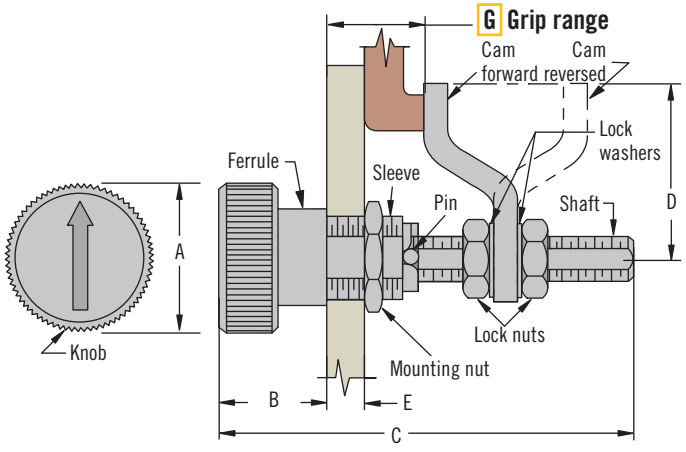

Size	Part Number	G Grip Range		A	B	C	D	E
		Minimum	Maximum					
Small	69-10-301-11	4 (.16)	28.2 (1.11)	12.7 (.50)	12.7 (.50) Max.	38.1 (1.50)	13.5 (.53)	4.75 (.188)
Medium	69-10-401-11	3.2 (.13)	33.3 (.13)	19.1 (.75)	17.5 (.69) Max.	47.5 (1.87))	15.9 (.63)	6.35 (.25)
Large	69-10-501-11	4.8 (.19)	61.9 (2.44)	28.6 (1.13)	25.4 (1) Max.	79.2 (3.12)	34.1 (1.34)	12.7 (.50)

Dimensions in millimeters (inch) unless otherwise stated

61 Cam Latch

Universal cabinet series · Adjustable grip

Knob Style

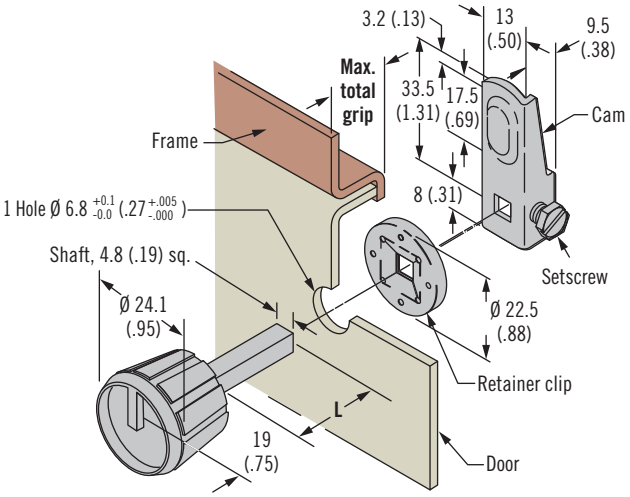

ACTUAL SIZE

Maximum Total Grip	Shaft Length L	Assembly Part number
12.5 (.50)	25.5 (1.00)	61-10-102-11
25 (1.00)	38 (1.50)	61-10-104-11
44.5 (1.75)	57 (2.25)	61-10-107-11

- **Single hole installation**
- **Accommodates wide grip ranges**

Material and Finish

Nylon and steel, zinc plated

Performance Details

Maximum static load: 110 N (25 lbf)

Notes

Knob style shown. Additional L-handle and flush slotted styles available

www.southco.com/61

92 Cam Latch

T, Compact-T and L-handle · Adjustable grip

Compact T-handle

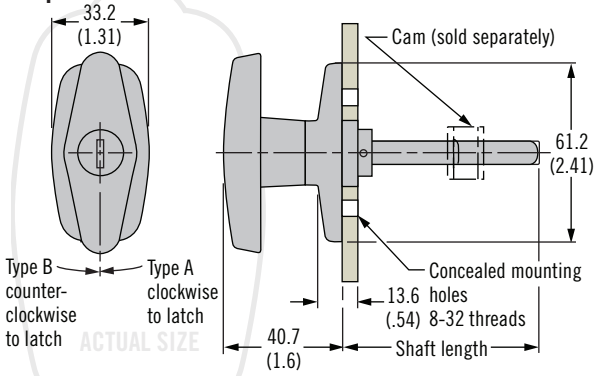

ACTUAL SIZE

Cam

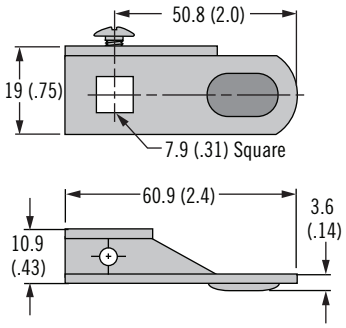

Finish	Shaft Length	Locking Compact-T Part Number	
		Type A	Type B
Black	38.1 (1.5)	92-61-113-50	92-61-213-50
	50.8 (2.0)	92-61-114-50	92-61-214-50
	63.5 (2.5)	92-61-115-50	92-61-215-50

Cam Part Number
92-24-203-12

Compact T-handle style shown. T and L-handle style available. Locking and non-locking.

- **Easy cam adjustments**

Material and Finish

Zinc alloy, powder coated or chrome plated and steel, zinc plated

Performance Details

Maximum static load: 150 N (34 lbf)

Notes

Black and chrome finish available

For versions with threaded shaft see page 176.

For fixed grip versions see page 162.

Gasket Part Number: 92-70-G (sold separately)

www.southco.com/92

H3 Swinghandle

Medium / large · Sealed / non-sealed

- **Zinc alloy swinghandle system**
- **Multiple locking options; including DIN profile**
- **Indoor/outdoor version**
- **Available for medium (125mm x 25mm) and large (150mm x 25mm) door cutout**

Material and Finish

Handle: Zinc alloy, black powder coated or satin chrome plated
Cam: Steel, zinc plated

Performance Details

Maximum static load: 250 N (56 lbf)

Sealing Notes

Sealed version meets NEMA 4 / IP66 water intrusion standards

Keys

See page 121

Multi-Point Systems

See page 192

Notes

*For dimension details of DIN lock version, please contact Southco

Product available to meet *TELCORDIA*® GR-487; contact Southco for details

Electromechanical swinghandle available see page 40

Key removal in lock position only for sealed version

For plastic version see page 228

TELCORDIA is a registered trademark of Telcordia Technologies, Inc.

Sealed (H3-50 medium shown)

(H3-60 large available part number selection)

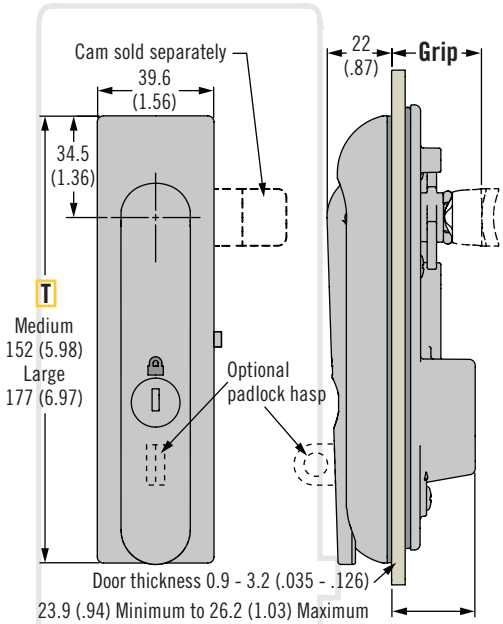

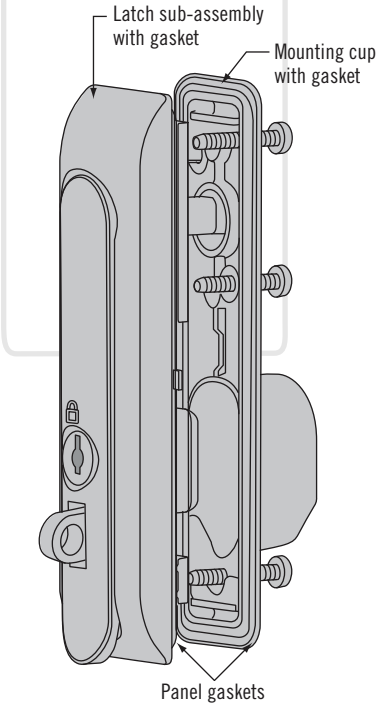

Non-Sealed (H3-60 large shown)

(H3-50 medium available part number selection)

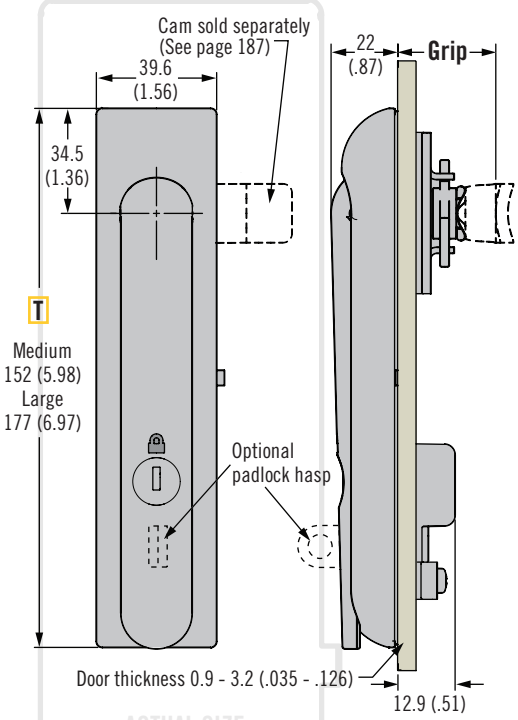

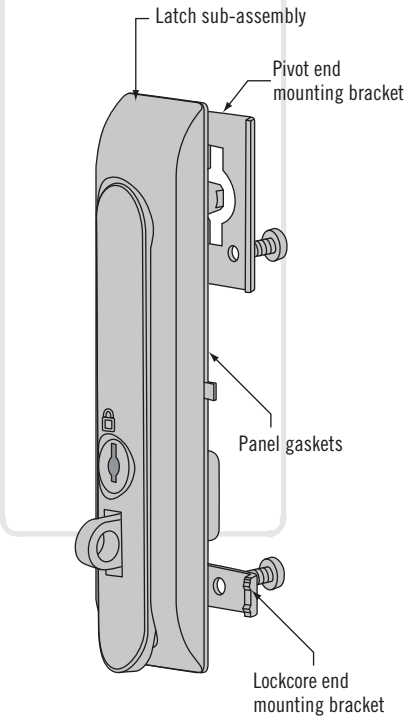

Dimensions in millimeters (inch) unless otherwise stated

southco®

Medium H3-50

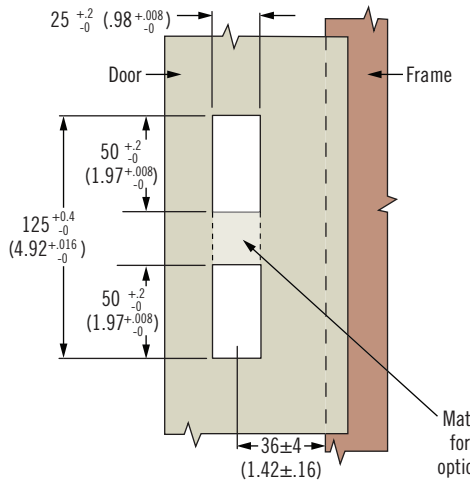

Large H3-60

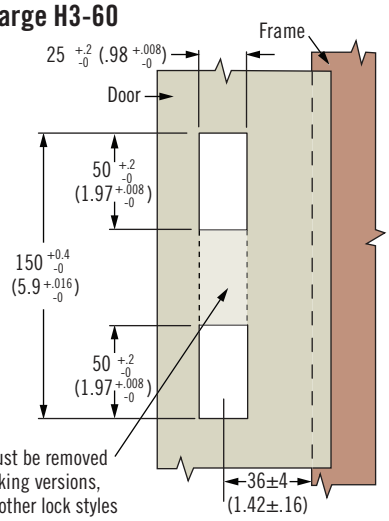

Cam Part Number Table For Use As Single Point Or With Actuator Plate (order separately from latch)			
Grip	Part Number	Grip	Part Number
10.3 (.41)	E5-6107	26.3 (1.04)	E5-6115
12.3 (.48)	E5-6108	28.3 (1.11)	E5-6116
14.3 (.56)	E5-6109	30.3 (1.19)	E5-6117
16.3 (.64)	E5-6110	32.3 (1.27)	E5-6118
18.3 (.72)	E5-6111	34.3 (1.35)	E5-6119
20.3 (.80)	E5-6112	36.3 (1.43)	E5-6120
22.3 (.88)	E5-6113	38.3 (1.51)	E5-6121
24.3 (.96)	E5-6114	40.3 (1.59)	E5-6122

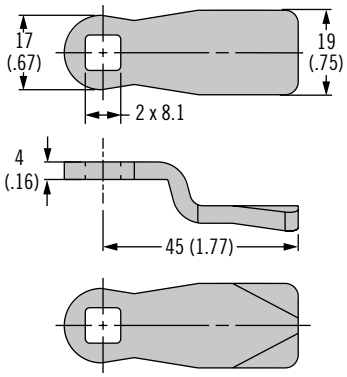

Latch Part Number (no cam)

H3 - T - A L - S F

T Size
- **50** Medium - 152 (5.98) height
- **60** Large - 177 (6.97) height

A Actuator style
- **3** No padlock hasp for use as single point or with actuator plate (see page 227)
- **4** With padlock hasp for use as single point or with actuator plate (see page 227)

For linear actuator version (see pages 224-225)

S Sealing option
- **0** Non-sealed
- **1** Sealed

F Finish
- **44** Satin chrome
- **50** Black powder coated

L Lock style
- **00** Locking DIN profile (no lock supplied)
- **01** Locking keyed alike CH751*
- **02** Locking keyed alike 300*
- **03** Locking keyed alike 333*
- **04** Non-locking
- **05** Locking keyed alike HL450*
- **20** Non-locking with detent
- **21** Locking DIN profile keyed alike CH751*
- **22** Locking DIN profile keyed alike 300*
- **23** Locking DIN profile keyed alike 333*
- **24** DIN without Lock Plug
- **40** 3 mm Double-bit
- **41** 5 mm Double-bit
- **42** Bellcore 216
- **43** Bellcore Hex-Pin Recess
- **47** 8 mm triangle
- **70** DIN profile 3 mm Double-bit
- **71** DIN profile 5 mm Double-bit
- **72** DIN profile Bellcore 216
- **73** DIN Profile Bellcore Hex-Pin Recess
- **77** DIN profile 8 mm triangle

Part Number Selection

For single point:
Order latch and cam separately

For multi-point:
1. Order latch and cam separately
2. Order multi-point system accessories (linear actuator or actuator plate, rod, rod guide) if 3 point latching required see pages 224-232.

Notes

Actuator style A options 1 and 2 see pages 224-225

*2 Overmolded keys supplied

Dimensions in millimeters (inch) unless otherwise stated

CAM LOCKS & LOCK CORES

PK Lock Cores

Pages 190 - 191

Different latch and lock core styles offer a variety of key code choices and implementation options for optimum security and flexibility.

Lock core options include:

- Keyed alike
- Keyed differently
- Master keyed, keyed differently
- Shuttered and non-shuttered
- Tool access
- Multiple finishes

PK

PK

PK

PK

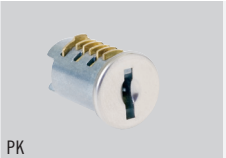
PK

CM Cam Locks

Pages 194 - 201

SOUTHCO® CM Cam Locks provide a basic key-locking or manual solution for a wide range of applications.

SOUTHCO® CM Cam Lock options include:

- Broad range of sizes fits a variety of enclosure applications
- Multiple access control styles: Key, tool or hand actuation
- Flexible key code options
- Modular design reduces inventory investment
- Options to meet environmental sealing requirements
- Attractive aesthetic finishes

CM-9

CM-9

CM-1

CM-2 CM-5

CM-3 CM-6

PT Tubular Key Cam Locks

Pages 202 - 203

SOUTHCO® PT Tubular Key cam locks offer a higher security solution with multiple options.

SOUTHCO® PT Tubular Key cam lock options include:

- 7-Pin tumbler design enhances key-locking security
- Broad range of sizes fits a variety of enclosure applications
- Flexible key code options
- Attractive chrome finish

PT-1

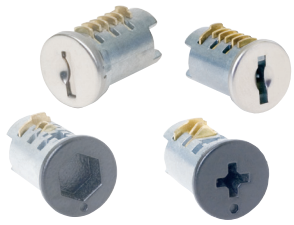

PK Lock Cores

SOUTHCO® Key-Choice System

- **Lock cores ordered separately**
- **Greater flexibility in locking requirements**

Material and Finish

Zinc alloy, chrome plated, black powder coated or with a stainless steel scalp

Key-Choice System

This icon indicates that a product is compatible with the *SOUTHCO®* Key-Choice System

The *SOUTHCO®* Key-Choice System features a common lock core that fits a wide range of *SOUTHCO®* latches.

This system allows for the independent selection of the correct latch for your application and the lock core required to manage the security of the end product. The guide below shows each of the latches in the *SOUTHCO®* Key-Choice System that can be purchased without the lock core installed.

Lock cores are sold separately which provides:

- **The option to configure multiple latch styles with the same keying option**
- **The ability to configure the same latch style with multiple keying options**
- **Inventory reduction by managing multiple keying options with the lock core, while latches remain without the core installed until keying assignment is desired**

Latches in the *SOUTHCO®* Key-Choice System

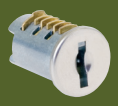

Compression	Cam	Push-to-close	Locks
62 Lift and Turn Latch page 129	E5 Wing Style Latch page 163	R3-20 Baggage Door Latch page 272	CM-3 Sealed page 196
C2 Lever Latch page 138	E5 T-Handle Latch page 162	AC-10 Actuator page 310	CM-6 Non-sealed page 196
C5 Sealed Lever Latch page 136	E5 L-Handle Latch page 160	AC-15 Actuator page 312	
	E5 Flush Cup Wing Style page 164		
			Handles and Pulls
			P2 Flush Pull Lockable page 595

Dimensions in millimeters (inch) unless otherwise stated

PK Lock Cores

SOUTHCO® Key-Choice System

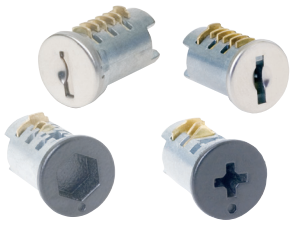

Lock Cores - Disc Tumbler

Lock Core Part Number						
Keying	Key code	Bag qty	Shuttered stainless steel scalp	Non shuttered stainless steel scalp	Non shuttered black powder coated	Non shuttered chrome plated
KA	CH751	1	PK-39-72-13-KCH751	PK-132-13	PK-115-13	PK-116-13
KA	RS001	1	PK-39-72-13-RS001	PK-132-13-RS001	PK-29-15-13-RS001	PK-29-16-13-RS001
KD	10 CODES	10	PK-39-72-13-KD1010	PK-132-13-KD1010	PK-29-15-13-KD1010	PK-29-16-13-KD1010
KD	50 CODES	50	PK-39-72-13-KD1050	PK-132-13-KD1050	PK-29-15-13-KD1050	PK-29-16-13-KD1050
KD	125 CODES	125	PK-39-72-13-KD1125	PK-132-13-KD1125	PK-29-15-13-KD1125	PK-29-16-13-KD1125
MKKD	10 CODES	10	PK-39-72-13-MK1010	PK-132-13-MK1010	PK-29-15-13-MK1010	PK-29-16-13-MK1010
MKKD	50 CODES	50	PK-39-72-13-MK1050	PK-132-13-MK1050	PK-29-15-13-MK1050	PK-29-16-13-MK1050
MKKD	125 CODES	125	PK-39-72-13-MK1125	PK-132-13-MK1125	PK-29-15-13-MK1125	PK-29-16-13-MK1125

Keys	Part Number
Master Key (1)	PK-24-01
Control (Removal) Key (1)	PK-11-03

Keys	Part Number
CH751	PK-10-01
RS001	PK-10-01-RS001

Lock Cores - Tool Operable

Head Style	Lock Core Part Number			
	Phillips recess	Slotted	4 mm Hex recess	8 mm Hex recess
Chrome plated	PK-0-34027-01	PK-0-43489-01	PK-0-34323-01	PK-0-40374-01
Black powder coated	PK-0-34027-50	PK-0-43489-50	PK-0-34323-50	PK-0-40374-50

Key code selection

KA - Keyed Alike:
All lock cores are the same key code

KD - Keyed Differently:
Multiple key codes provided in a non-master key system

MKKD - Master Keyed, Keyed Differently:
Multiple key codes provided in a master key system

Notes

Part Number includes 1 lock core and 2 keys

Lock Core Installation for CM-3 and CM-6 only (see page 196)

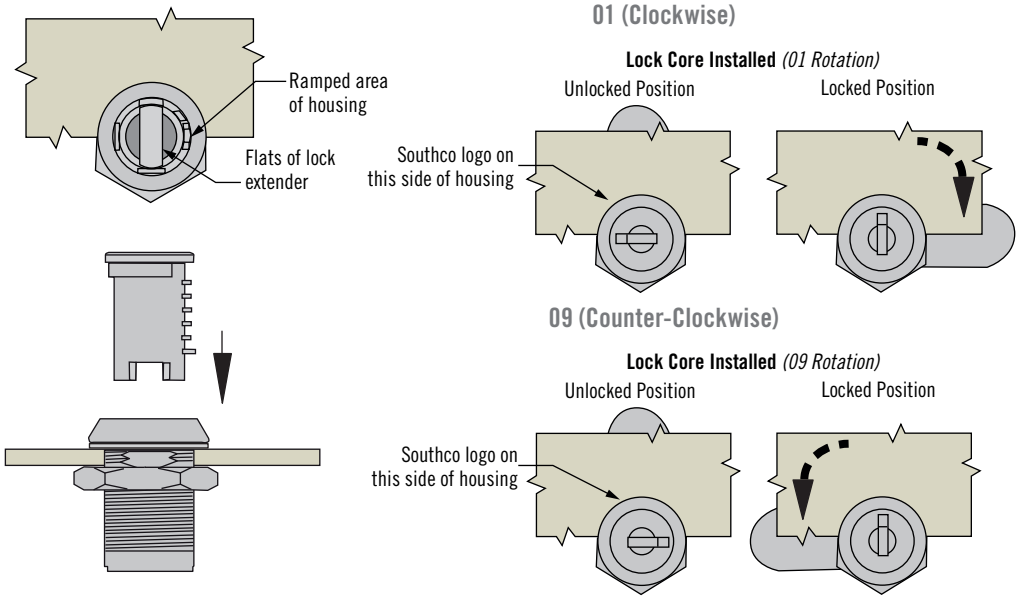

Installation Notes

1. Prepare panel and install latches shown on page 199.
2. Latch should be in unlatched position. The flats of the lock extender should be aligned with the flats on the housing.
3. Take a lock core and orient the brass wafers to the internal ramped area of the housing. Push lock core into housing until it stops.
4. Insert key into lock core and turn to verify lock core is fully seated and operating properly.
5. Install cam.

Cam Locks

Selection guide

Use this selection guide to choose the right cam lock for your application

Key-Locking Available

Key-Choice System

NEMA / IP Rated

Stainless Steel

		Latching Series	MATERIAL		INSTALLATION	
			Stainless Steel Scalp	Zinc and Steel	Key-Choice System	Maximum Door Thickness
CM REMOVABLE CORE Page 196		CM-6	✔	✔	✔	38.9 (1.53)
		CM-3		✔	✔	38.9 (1.53)
CM FIXED CORE PAGES 197-198		CM-5	✔	✔		38.9 (1.53)
		CM-2		✔		38.9 (1.53)
		CM-1		✔		26.2 (1.03)
CM MINI CAM PAGE 200		CM-9		✔		7.5 (.3)
		CM-9		✔		7.5 (.3)
PT TUBULAR PAGE 202		PT-1		✔		28.9 (1.14)

Dimensions in millimeters (inch) unless otherwise stated

PERFORMANCE			ACCESS STYLE				
NEMA / IP Rated	Average Ultimate Load on Cam	Grip Range	Key-Locking	Keyed Alike	Keyed Differently	Master Keyed, Keyed Differently	Tool Access
	180N (40 lbf)	6.4 - 57.2 (.25 - 2.25)	✔	✔	✔	✔	✔
✔	180N (40 lbf)	6.4 - 57.2 (.25 - 2.25)	✔	✔	✔	✔	✔
	180N (40 lbf)	1.6 - 57.2 (.063 - 2.25)	✔	✔			
✔	180N (40 lbf)	6.4 - 57.2 (.25 - 2.25)	✔	✔			
✔	180N (40 lbf)	6.4 - 44.5 (.25 - 1.75)					
	160N (35 lbf)	9.7 - 21.3 (.38 - .84)	✔	✔	✔		
	160N (35 lbf)	9.7 - 21.3 (.38 - .84)					
	645N (145 lbf)	6.4 - 42.8 (.25 - 1.69)	✔	✔	✔		

Dimensions in millimeters (inch) unless otherwise stated

CM Cam Locks

Selection

- **Removable core options provide maximum flexibility**
- **Fixed core options provide simple, economic solutions**
- **Sealed housings are available**
- **Multiple finishes**
- **A broad selection of lock housing and cam sizes available**

Notes

All CM Cam Lock housings, cams, and lock core components can be ordered separately for maximum configuration flexibility with minimal inventory investment.
To determine the perfect CM Cam Lock components for your needs, simply follow the **Selection Guide** on the next page.

Cam Lock Options

Removable Core

- **Multiple key codes**
- **Tool actuation**
- **Change key codes in future**
- **Configure to order**

Non Sealed CM-6
Page 196

Sealed CM-3
Page 196

Key Options

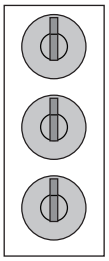

Keyed alike

Keyed differently

Master keyed, keyed differently

Tool Options

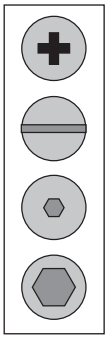

Phillips recess

Slotted

4mm Hex recess

8mm Hex recess

Fixed Core

- **Single key code**
- **Key-locking**
- **Wing driver**
- **Integrated housing and lock core**

Non Sealed CM-5
Page 197

Sealed CM-2
Page 197

Wing Driver CM-1
Page 198

Dimensions in millimeters (inch) unless otherwise stated

Cam Lock Selection Guide

1. Once you have determined the **CM Cam Lock** version that best meets your needs, calculate the **Cam Grip** for your application using the illustration below.

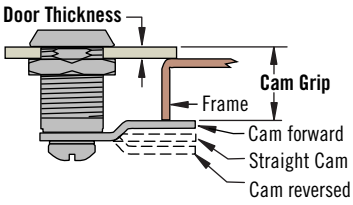

Notes: add 0.5 (.02) to your grip when using a sealed product.

2. In the **TAN** section below, locate the **Cam Grip** calculated for your application. If your grip falls between two values, use the higher value.

Notes: Certain grip values repeat in the table below. Use the value that results in the shortest housing possible based on the **Max. Door Thickness** allowed.

3. From this value, move right horizontally into the **GRAY** section and verify your door thickness falls within the **Max. Door Thickness** listed. Once this is verified, the housing length is selected and is illustrated by the **Housing Length Number**.

4. Returning to your original grip value in the **TAN** section, move down vertically into the **GREEN** section. The **GREEN** section illustrates the cams that are appropriate for your grip.

5. By determining the required cam orientation and length in the **BLUE** section, the appropriate **Cam Part Number** for your application is selected.

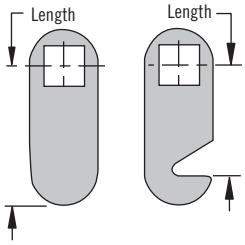

6. Proceed to the Cam Lock sections (CM-6, CM-3, CM-2, CM-5, and CM-1) to complete your **Part Number** selection.

Selection Guide

Cam Grips							Max. Door Thickness	Housing Length Number
20.7 (.81)	17.5 (.69)	14.3 (.56)	11.1 (.44)	8 (.31)	4.8 (.19)	1.6 (.06)	2.4 (.09)	7
25.4 (1.00)	22.2 (.88)	19.1 (.75)	15.9 (.63)	12.7 (.50)	9.5 (.38)	6.4 (.25)	7.1 (.28)	1
31.8 (1.25)	28.6 (1.13)	25.4 (1.00)	22.2 (.88)	19.1 (.75)	15.9 (.63)	12.7 (.50)	13.5 (.53)	2
38.1 (1.50)	34.9 (1.38)	31.8 (1.25)	28.6 (1.13)	25.4 (1.00)	22.2 (.88)	19.1 (.75)	19.8 (.78)	6
44.5 (1.75)	41.3 (1.63)	38.1 (1.50)	34.9 (1.38)	31.8 (1.25)	28.6 (1.13)	25.4 (1.00)	26.2 (1.03)	3
50.8 (2.00)	47.6 (1.88)	44.5 (1.75)	41.3 (1.63)	38.1 (1.50)	34.9 (1.38)	31.8 (1.25)	32.5 (1.28)	4
57.2 (2.25)	54 (2.13)	50.8 (2.00)	47.6 (1.88)	44.5 (1.75)	41.3 (1.63)	38.1 (1.50)	38.9 (1.53)	5

Cam Part Number							Cam Length	Cam Orientation
Cam Reversed			Straight	Cam Forward				
CM-C606	CM-C406	CM-C206	CM-C006	CM-C206	CM-C406	CM-C606	19.1 (.75)	No Hook
CM-C610	CM-C410	CM-C210	CM-C010	CM-C210	CM-C410	CM-C610	31.8 (1.25)	
CM-C614	CM-C414	CM-C214	CM-C014	CM-C214	CM-C414	CM-C614	44.5 (1.75)	
CM-L606	CM-L406	CM-L206	CM-H006	CM-H206	CM-H406	CM-H606	19.1 (.75)	Left
CM-L610	CM-L410	CM-L210	CM-H010	CM-H210	CM-H410	CM-H610	31.8 (1.25)	
CM-L614	CM-L414	CM-L214	CM-H014	CM-H214	CM-H414	CM-H614	44.5 (1.75)	
CM-H606	CM-H406	CM-H206	CM-H006	CM-L206	CM-L406	CM-L606	19.1 (.75)	Right
CM-H610	CM-H410	CM-H210	CM-H010	CM-L210	CM-L410	CM-L610	31.8 (1.25)	
CM-H614	CM-H414	CM-H214	CM-H014	CM-L214	CM-L414	CM-L614	44.5 (1.75)	

Also use the online configurator at www.southco.com

Dimensions in millimeters (inch) unless otherwise stated

CM Cam Locks

Removable core

- **Ideal for applications requiring multiple key codes or tool actuated options**
- **Sealed version meets NEMA 4 and IP65 water intrusion standards**
- **Lock cores and cams sold separately**
- **Master and non-master key codes available**

Material and Finish

Housing: Zinc alloy, chrome plated or black powder coated
Scalp: stainless steel

Performance Details

Average ultimate load on cam: 180 N (40 lbf)

Installation Notes

See page 199

Accessories

See page 201

Sealed Disc Tumbler

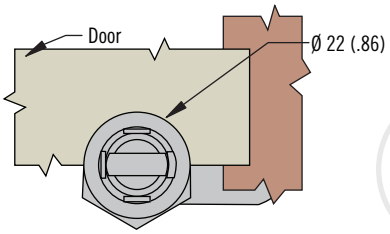

ACTUAL SIZE

Non-Sealed Disc Tumbler

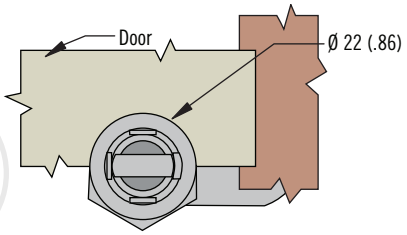

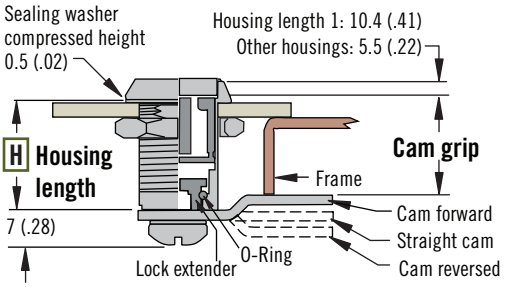

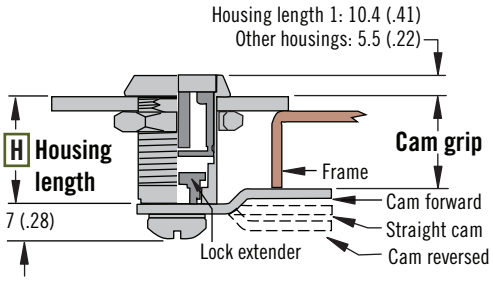

Cam Rotation

R 01 (Clockwise to Lock)

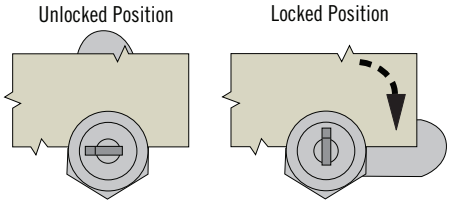

R 09 (Counter-Clockwise to Lock)

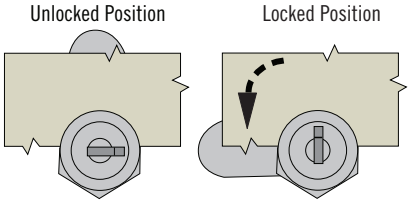

Part Number Selection

See table

Housing part number (no lock core or cam)

Order housing, lock core and cam separately

Lock core part numbers and installation see page 191

Cam page 199

To select cam part number see grip table page 195

Sealed Version

CM - 3 - H F 1 R - NUB

- **F Finish**
  - **B** Black powder coated
  - **C** Chrome plated
- **R Rotation**
  - **01** Clockwise
  - **09** Counter-clockwise

Max. Door Thickness	Housing Length	H Housing Length Number
7.1 (.28)	16 (.625)	1
13.5 (.53)	22 (.875)	2
19.8 (.78)	28.5 (1.125)	6
26.2 (1.03)	35 (1.375)	3
32.5 (1.28)	41 (1.625)	4
38.9 (1.53)	48 (1.875)	5

Non-sealed version

CM - 6 - H S4 R - NUB

(Stainless steel scalp)

Dimensions in millimeters (inch) unless otherwise stated

Sealed Disc Tumbler

Pictured with Lockcore Installed

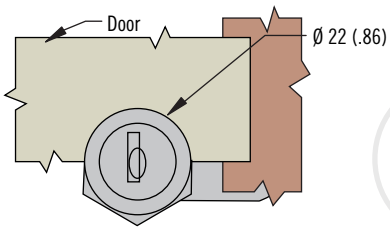

ACTUAL SIZE

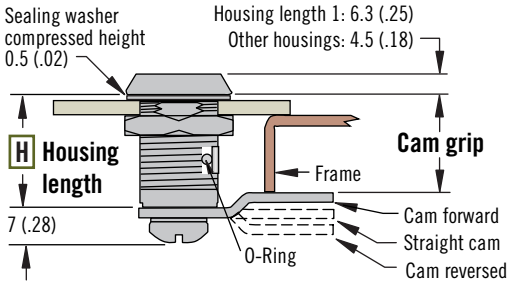

Non-Sealed Disc Tumbler

Pictured with Lockcore Installed

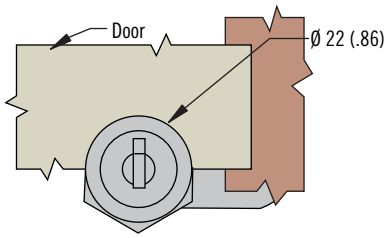

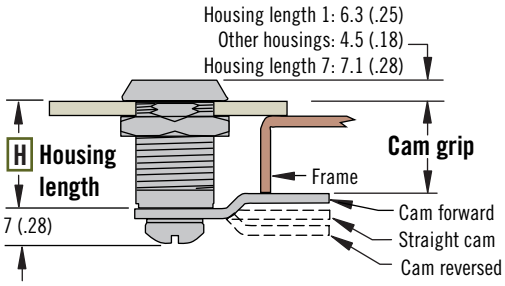

Cam Rotation

R 01 (Clockwise to Lock)

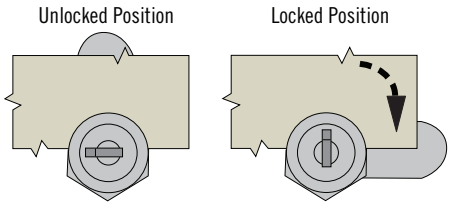

R 09 (Counter-Clockwise to Lock)

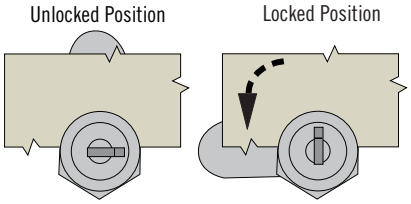

- **Stainless steel scalp on housing and lock core on non-shuttered style**
- **Sealed version meets NEMA 4 and IP65 water intrusion standards**
- **Cams sold separately**

Material and Finish

Housing: Zinc alloy, chrome plated or black powder coated
Scalp: stainless steel

Performance Details

Average ultimate load on cam: 180 N (40 lbf)

Installation Notes

See page 199

Accessories

See pages 169

Notes

Lock: Key code CH751, keyed alike, key removal in locked and unlocked positions (two keys supplied)

Part Number Selection

See table

Lock part number (no cam)
Order lock and cam separately
Cam page 199
To select cam part number see grip table page 195
Notes
CM-2-1 version is sealed but does not meet the NEMA 4 / IP65 standards

Sealed Version

CM - 2 - H F 1 R - 2SB

F Finish
B Black powder coated
C Chrome plated

R Rotation
01 Clockwise
09 Counter-clockwise

Max. Door Thickness	Housing Length	H Housing Length Number
2.4 (.09)	11 (.438)	**7 Non-Sealed Only**
7.1 (.28)	16 (.625)	1
13.5 (.53)	22 (.875)	2
19.8 (.78)	28.5 (1.125)	6
26.2 (1.03)	35 (1.375)	3
32.5 (1.28)	41 (1.625)	4
38.9 (1.53)	48 (1.875)	5

Non-sealed version

CM - 5 - H S4 R - 2TB

(Stainless steel scalp)

CM Cam Locks

Fixed core wing driver

- **Sealed to meet NEMA 4 and IP65 water intrusion standards**
- **Smooth, consistent operation**
- **Cams sold separately**

Material and Finish

Housing: Zinc alloy, chrome plated or black powder coated

Performance Details

Average ultimate load on cam: 180 N (40 lbf)

Installation Notes

See page 199

Accessories

See page 201

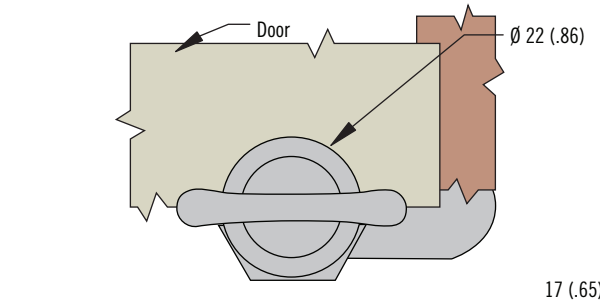

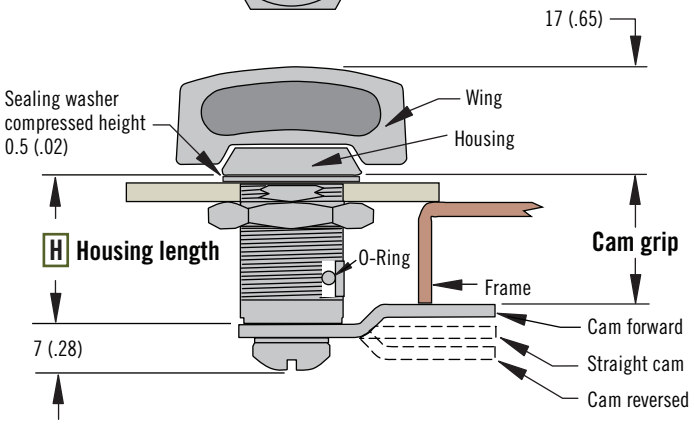

ACTUAL SIZE

Cam Rotation

R 01 (Clockwise to Lock)

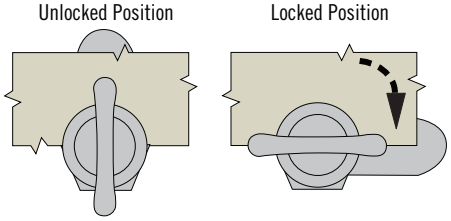

R 09 (Counter-Clockwise to Lock)

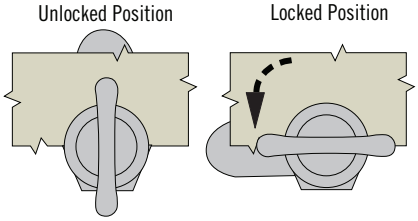

Part Number Selection

See table

Lock part number (no cam)

Order lock and cam separately

Cam page 199

To select cam part number see grip table page 195

F Housing Finish
B Black powder coated
C Chrome plated

R Rotation
01 Clockwise
09 Counter-clockwise

W Wing Finish
B Black powder coated
C Chrome plated

CM - 1 - H F 1 R - 1 W

H Housing Length Number	Housing Length	Max. Door Thickness
1	16 (.625)	7.1 (.28)
2	22 (.875)	13.5 (.53)
3	35 (1.375)	26.2 (1.03)

Dimensions in millimeters (inch) unless otherwise stated

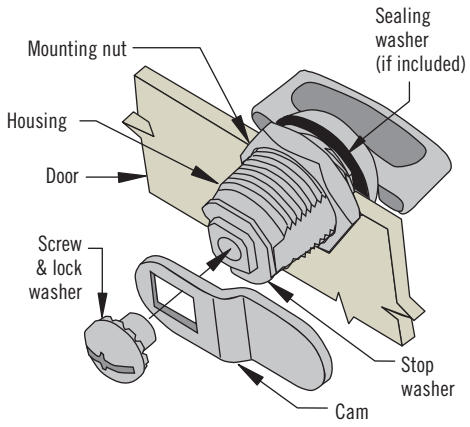

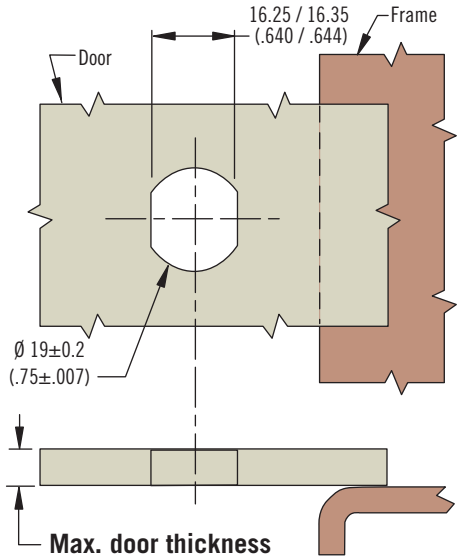

Installation Notes

1. Place sealing washer onto housing (if included) and put through the mounting hole (see panel preparation).
2. Install mounting nut and tighten to 5 N•m (44 in•lbf).
3. Install cam to assembly. Properly orientate for rotation and grip.
4. Install screw. Tighten to 4 N•m (35 in•lbf).

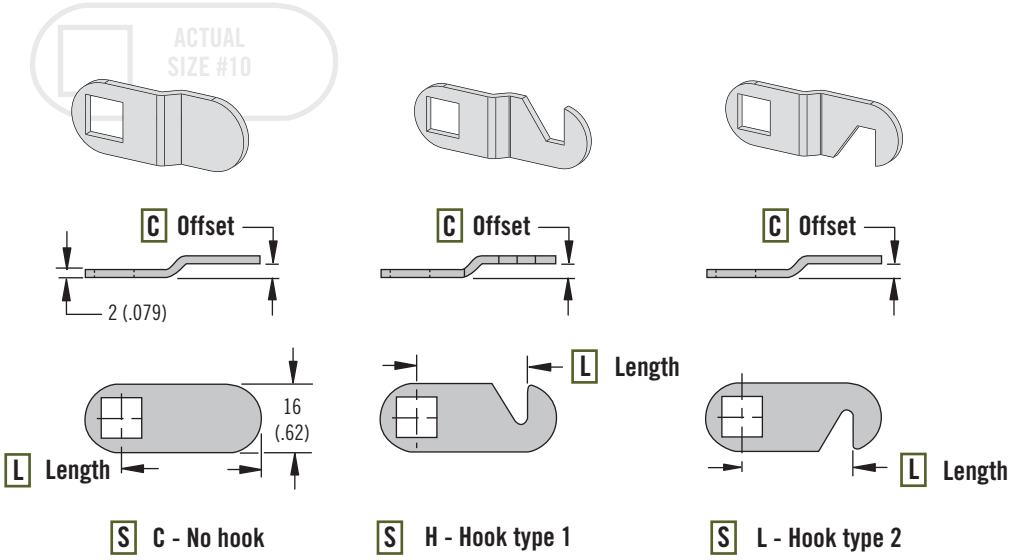

Material and Finish

Cam: Steel plated

Part Number Selection

See table

Order lock and cam separately

Cam part number (no lock)

For Lock selection see pages 196-198

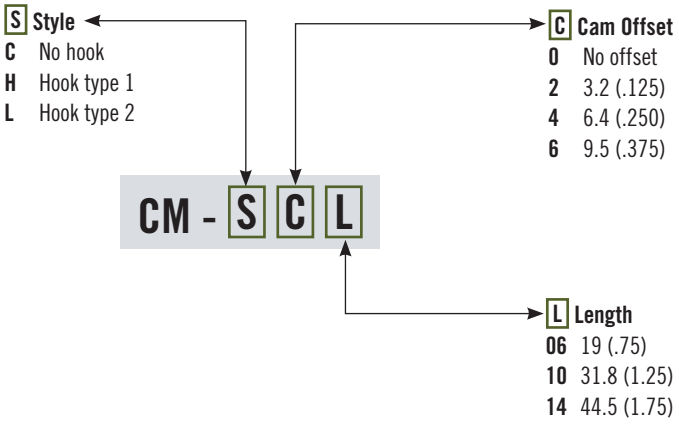

CM Mini Cam Locks

Fixed core

- **Compact design**
- **Non-shuttered lock core**
- **Cams sold separately**

Material and Finish

Lock: Zinc alloy, chrome plated or black powder coated
Cam: Steel, zinc plated

Performance Details

Average ultimate load on cam: 160 N (35 lbf)

Installation Notes

1. Install mounting nut and tighten to 4 N•m (35 in•lbf).
2. Install cam to assembly. Properly orientate for rotation and grip.
3. Install screw. Tighten to 4 N•m (35 in•lbf).

Accessories

See page 201

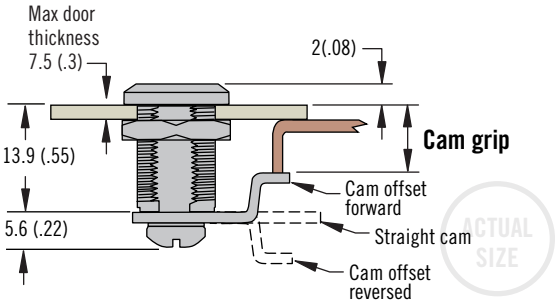

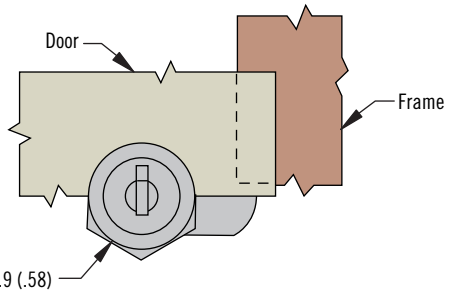

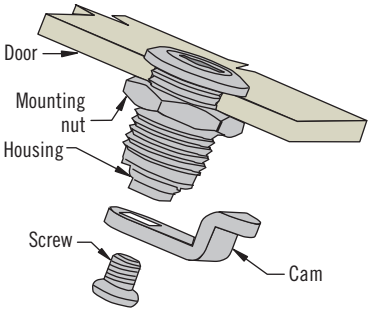

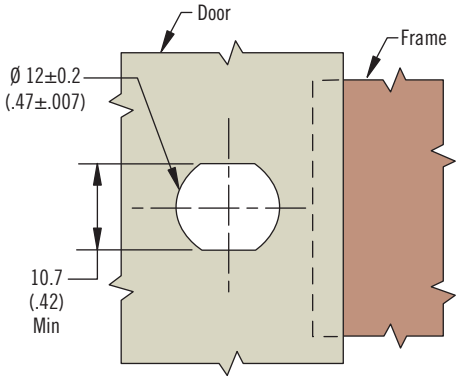

Cam - Offset

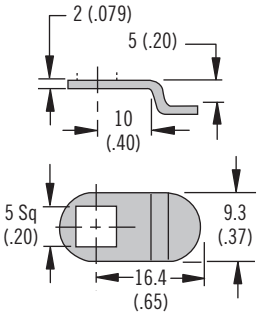

Cam - Straight

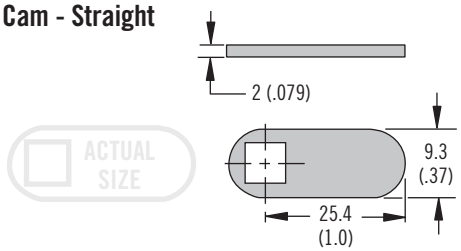

Cam Grip		
Cam Grip	**Cam Type**	**Cam Part Number**
9.7 (.38)	Offset forward	CM-M101
15.4 (.61)	Straight	CM-M002
21.3 (.84)	Offset reverse	CM-M101

Part Number Selection

Lock part number (no cam)
Order lock and cam separately
To select cam part number see grip table above

F Housing Finish
B Black powder coated
C Chrome plated

CM - 9 - 1 F 109 - S - KC

S Style
12N Wing
21B Key-locking

KC Key Code
Omit for wing style
KA Keyed alike M01 (2 keys supplied)
KD Keyed differently (10 key codes provided in a non-master key system) M01 to M10 (2 keys supplied)

Dimensions in millimeters (inch) unless otherwise stated

Accessories (Add adjustment value to door thickness when accessory is used)

Metal Dust Cover

Plastic Dust Cover

Pull Tab - In-Line

Pull Tab - Perpendicular

Overmolded Key

Metal Pull Tab

Trim Washer

Prong Washer

Sealing Washer

Plain Key

Item	Part Number	Material	Adjustment Value	Suitable for		
				CM	Mini CM	PT
Metal dust cover	CM-A-10-01	Zinc alloy, chrome plated and stainless steel	0.7 (.027)	✓		✓
Plastic dust cover	90-2	Santoprene, black	2.1 (.085)	✓		✓
Pull tab - In-line	CM-A-08-01	Nylon, black	2.1 (.085)	✓		✓
Pull tab - Perpendicular	CM-A-08-02	Nylon, black	2.1 (.085)	✓		✓
Metal pull tab	CM-A-09	Stainless steel	1.5 (.059)	✓		✓
Trim washer	CM-A-07-N	Steel, nickel plated	0.8 (.031)	✓		✓
Prong washer	CM-A-04	Steel, plated	0.9 (.035)	✓		✓
Sealing washer	CM-A-03	Rubber, black	1.0 (.039)	✓		✓

Keys (contact Southco for custom overmolded logo options)

Item	Part Number	Suitable for		
		CM	Mini CM	PT
Plain key CH751 pair	PK-10-01	✓		
Overmolded key CH751 pair	PK-10-01-05	✓		
Overmolded key CH751 single	PK-10-10-05	✓		
Control (removal) key single	PK-11-03	✓		
Master key single	PK-24-01	✓		
Plain key M01 pair	PK-10-01-M01		✓	
Tubular key T0001 pair	PK-60-01-T0001			✓

Replacement Parts

Item	Part Number	Material	Suitable for		
			CM	Mini CM	PT
Housing mounting nut	CM-A-01	Zinc alloy	✓		
Housing mounting nut	PT-A-04-01				✓
Housing mounting nut	CM-B-01			✓	
Housing mounting clip	CM-A-05	Spring steel, plated	✓		
Cam mounting screw	CM-A-02	Steel, plated	✓		
Cam mounting screw	CM-B-03			✓	
Tooth washer hex nut	CM-A-12		✓		
Lockwasher	PT-A-09				✓
Cam mounting nut	PT-A-05-01				✓

PT Tubular Key Cam Locks

Fixed core

- 7-pin tumbler lock security
- Keyed alike, keyed differently or custom key code options
- Cams sold separately

Material and Finish

Zinc alloy, chrome plated

Performance Details

Average ultimate load on cam:
645 N (145 lbf)

Accessories

See page 201

Installation Notes

1. Install mounting nut and tighten to 5 N•m (44 in•lbf) Max.
2. Install cam to assembly. Properly orient for rotation and grip.
3. Install lockwasher and cam mounting nut. Tighten to 2 N•m (18 in•lbf).

Non-Sealed Pin Tumbler

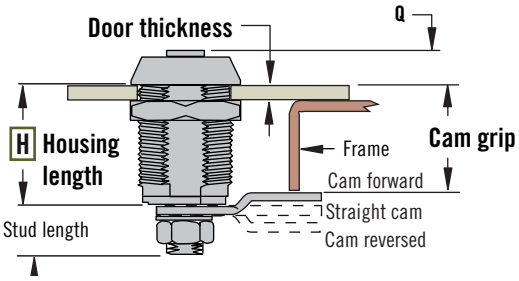

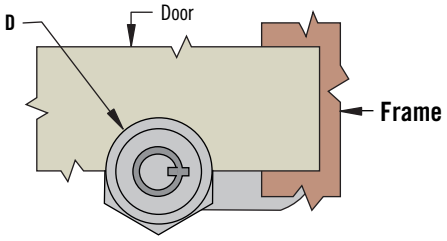

Series	Non-Sealed Pin Tumbler	
	Q	D
Standard	6.8 (.27)	Ø 22 (.87)

Series	Installation		
	X	Y	Z
Standard	16.26 - 16.36 (.640 - .644)	Ø 19±0.2 (.75±.007)	19±2 (.75±.08)

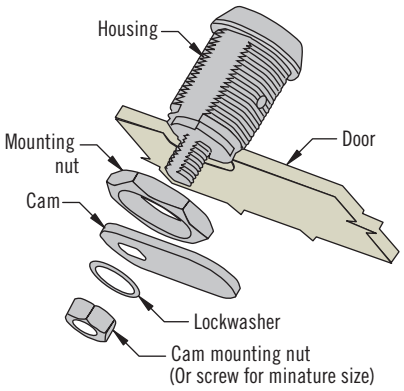

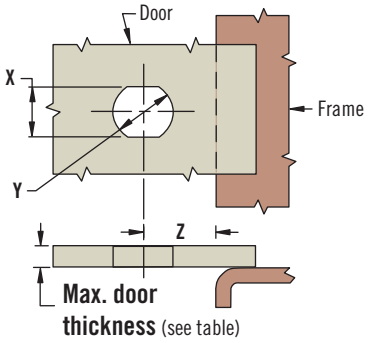

Part Number Selection

See table

Lock part number (no cam)

Order lock and cam separately

Cam page 203

R Rotation
01 Clockwise
09 Counter-clockwise

K Key removal
B Locked / unlocked removal
L Locked removal only

PT - 1 - H C1 R - 20 K - KC

KC Key Code
KA Keyed alike T0001 (2 keys supplied)
KD Keyed differently 50 key codes (T0001 to T0050) provided in a non-master key system (2 keys supplied)

H Housing Length Number	Housing Length	Stud Length	Max. Door Thickness
1	12.7 (.50)	8.9 (.35)	5.1 (.20)
2	17.5 (.69)	9.5 (.37)	10.9 (.43)
3	23.8 (.94)	9.5 (.37)	15.9 (.63)
4	30.5 (1.20)	9.5 (.37)	22.9 (.90)
5	36.5 (1.44)	9.5 (.37)	28.9 (1.14)

Dimensions in millimeters (inch) unless otherwise stated

PT Tubular Key Cam Locks

Cams & installation

Installation

Standard

Cam Grip					Max. Door Thickness	Housing Length Number
19.0 (.75)	15.9 (.63)	12.7 (.50)	9.5 (.38)	6.4 (.25)	5.1 (.20)	1
23.8 (.94)	20.7 (.81)	17.5 (.69)	14.3 (.56)	11.2 (.44)	10.9 (.43)	2
30.1 (1.19)	27 (1.06)	23.8 (.94)	20.6 (.81)	17.5 (.69)	15.9 (.63)	3
36.8 (1.45)	33.7 (1.33)	30.5 (1.20)	27.3 (1.08)	24.2 (.95)	22.9 (.90)	4
42.8 (1.69)	39.7 (1.56)	36.5 (1.44)	33.3 (1.31)	30.2 (1.19)	28.9 (1.14)	5

Cam Part Number					Cam Type
Cam Reversed		Straight	Cam Forward		
PT-T409	PT-T209	PT-T009	PT-T209	PT-T409	No Hook
PT-W409	PT-W209	PT-F009	PT-F209	PT-F409	Left
PT-F409	PT-F209	PT-F009	PT-W209	PT-W409	Right

Also use the online configurator at www.southco.com

Cam Styles

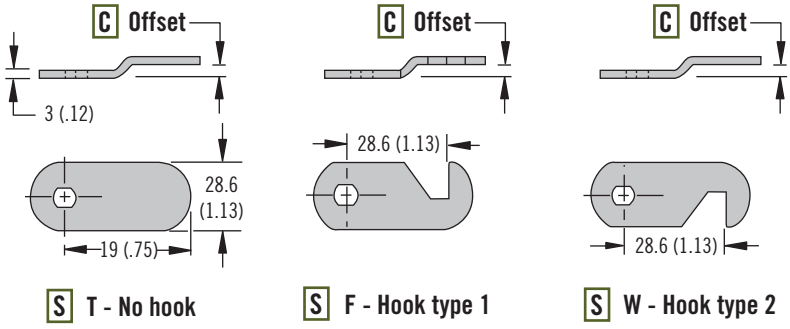

Material

1. In the TAN section, locate the cam grip calculated for your application. If your grip falls between two values, use the higher value.

Notes: For cam grips that can be achieved with multiple housing lengths, use the value that results in the shortest housing possible based on the Max. door thickness allowed.

2. From this value, move right horizontally into the Gray section and verify your door thickness falls within the Max. door thickness listed. Once this is verified, the housing length is selected and is illustrated by the housing length number.
3. Returning to your original grip value in the TAN section, move down vertically into the GREEN section. The GREEN section illustrates the cams that are appropriate for your grip.
4. By determining the required cam orientation and style in the BLUE section, the appropriate cam for your application is selected.

Part Number Selection

See table

Order lock and cam separately

Cam part number (no lock)

For Lock selection see page 202

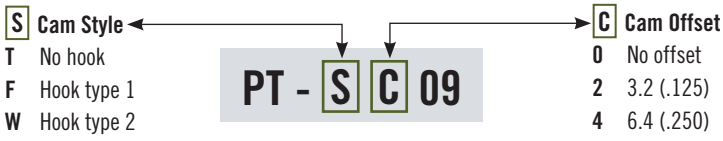

ACTUAL SIZE

MULTI-POINT LATCHING SYSTEMS

Multi-Point Systems

Pages 206-229

Multi-point latching systems provide a convenient solution for large door spans with a single user touch point operating multiple latch points.

Multiple points of engagement provide extra security and strength by eliminating pry points, door flexing and rattle.

Available in multiple styles for gasket sealed applications.

M3

CR

F2

H3

Rod Systems

Pages 230-233

Multi-point rod systems provide a simple, economical add-on for many *SOUTHCO*® single point latches.

Rod systems can be included in your original cabinet design or retrofit as needed. Additional latching points provide extra security and strength by eliminating pry points, flexing and rattle.

Available in multiple styles for gasket sealed applications.

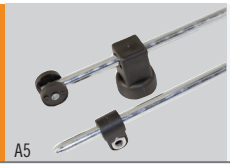
A5

A5

H3 Electronic Swinghandle System

Pages 40-41

The H3 electronic locking swinghandle provides the functionality of a manual latching system with the added benefit of electronic locking for access control. For more information see pages 40-41 in the Electronic Access section.

- Remote lock and unlock
- Single or multi-point
- Low power, gear motor driven mechanism
- Momentary or continuous lock actuation
- High security DIN lock manual override
- Directly integrates with industry standard rack monitoring and access control systems
- Fits industry standard panel preparations
- Integrated sensors detect lock and latch status for network control, monitoring and alarm functions
- Accommodates both left and right doors

Multi-Point Systems

Multi-point latching systems provide a convenient solution for large door spans, with a single user touch point operating multiple latching points. Providing multiple points of engagement alleviates door flexing and rattling, and eliminates pry points on doors with longer spans. Over-center mechanisms provide the ultimate in consistent compression along the entire edge of the enclosure door. Available with a choice of stylish actuators and security options to suit all your application requirements.

M3 Adjustable Compression

Designed for NEMA/IP rated enclosures

Multiple security options

Each latch fully adjustable for perfect door trim

CR Compression Swinghandle

Designed for NEMA/IP rated enclosures

Multiple security options

Designed with center point compression and heavy-duty adjustable rod roller system

F2 Lift Handle

Designed for indoor enclosures and installed outside the sealed area

H3 Swinghandle

Designed for NEMA/IP rated enclosures

Multiple actuator styles

Suitable for A5 modular rod system

Linear actuator assembly for limited space application

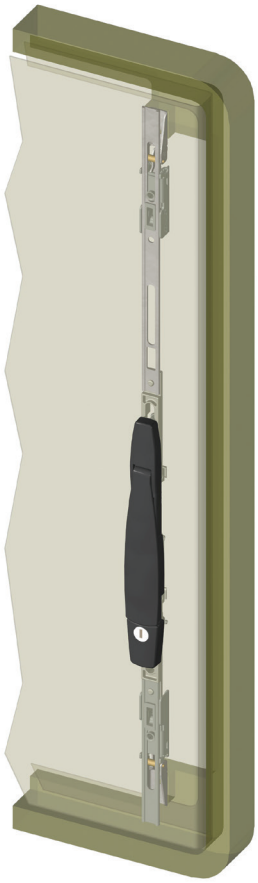

***SOUTHCO*® rod systems are a simple add-on option for many single-point latches to provide multi-point latching for added strength and security, eliminating pry points, flexing and rattle. Available with a variety of stylish actuators and security options to suit all your enclosure requirements.**

In this handbook, where a latch product page displays the multi-point icon, it indicates that you can add a rod system of your choice.

A rod system will require the center latching device to be ordered separately and the rod system components to be ordered from the same family.

COMPATIBLE PRODUCT CLASS FAMILIES									
EAS	COMPRESSION			CAM					
H3 - EM	E3 Large	62	M1	E5	H3	92	68	01	24

A5 Modular Rod System
Adjustable rod system (shown with H3 swing handle latch)

Dimensions in millimeters (inch) unless otherwise stated

Multi-Point Latching Systems

Selection guide

Use this selection guide to help make the right choice of multi-point system for your application

- Key-Locking Available
- NEMA / IP Rated
- Multi-Point Latching
- Padlockable
- Stainless Steel
- Vibration Resistant

COMPLETE SYSTEMS				MATERIAL		
	Actuator	Latch	Product Class	Zinc and Steel, Zinc Plated	Zinc and Stainless Steel	Plastic and Steel, Zinc Plated
MULTI-POINT LATCHING SYSTEMS PAGES 206-229		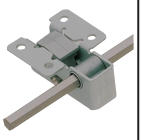	M3	✔		
			CR		✔	
			F2			✔
			H3	✔		

ROD SYSTEMS			MATERIAL			PERFORMANCE
		Product Class	Zinc Actuator with Plated Steel Rod	Zinc Plated Steel actuator with Aluminium Rod	Zinc Actuator with Aluminum Rod	Rod Roller Assembly Pull-Up
ROD SYSTEMS PAGES 230-233		A5	✔		✔	4.5 (.18)
		A5 - A8 Contact Southco		✔		3 (.12)
	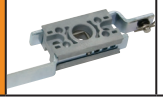	H3 Linear Actuator	✔			4.5 (.18)

Dimensions in millimeters (inch) unless otherwise stated

southco®

PERFORMANCE				ACCESS STYLE				INSTALLATION	
Maximum Static Load	NEMA / IP Rated	Compression	Grip Range	Key-Locking	Tool Secured	Padlockable	Electronic Access	Concealed	Flush/ Low Profile
890 N (200 lbf)	✔	5 (.197)	3.5 - 20 (.14 - .79)	✔	✔	✔		✔	✔
500 N (112 lbf)	✔	5 (.197)	5 - 124 (.197 - 4.88)	✔	✔	✔			✔
100 N (22 lbf)		12 (.47)	15 - 25 (.59 - .98)	✔					✔
250 N (56 lbf)	✔		10.3 - 50.9 (.41 - 2)	✔	✔	✔	✔		✔

COMPATIBLE PRODUCT CLASS FAMILIES									
EAS PAGES 40-41	COMPRESSION PAGES 86-145			CAM PAGES 146-187					
H3 - EM	E3 Large	62	M1	E5	H3	92	68	01	24
		✔		✔	✔	✔			
	✔	✔	✔	✔		✔	✔	✔	✔
✔					✔				

Dimensions in millimeters (inch) unless otherwise stated

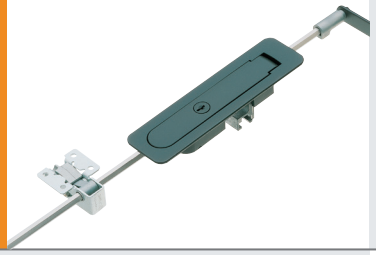

M3 Compression System

Remote compression latch

- **Consistent compression driven by rotational rod**
- **Adjustable grip**
- **Meets NEMA 4 / IP66 and EMI standards**
- **Can be driven by hand, tool or key-locking actuators**

Material and Finish

Zinc alloy and steel, zinc plated

Performance Details

Max. static load:
890 N (200 lbf) per latch
Average ultimate load:
1335 N (300 lbf)

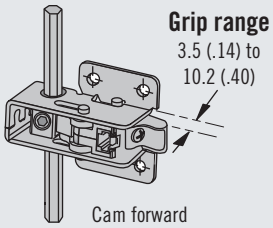

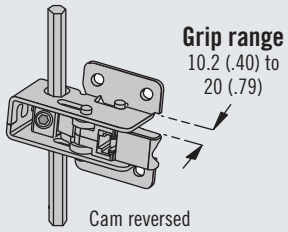

Notes

Do not exceed 20 (.79) grip range with cam reversed

Part Number

The complete system consists of:
Remote compression latch and/or optional keeper (see page 210)
Actuator (see pages 211-214)
Rods (see page 215)

Order each component separately

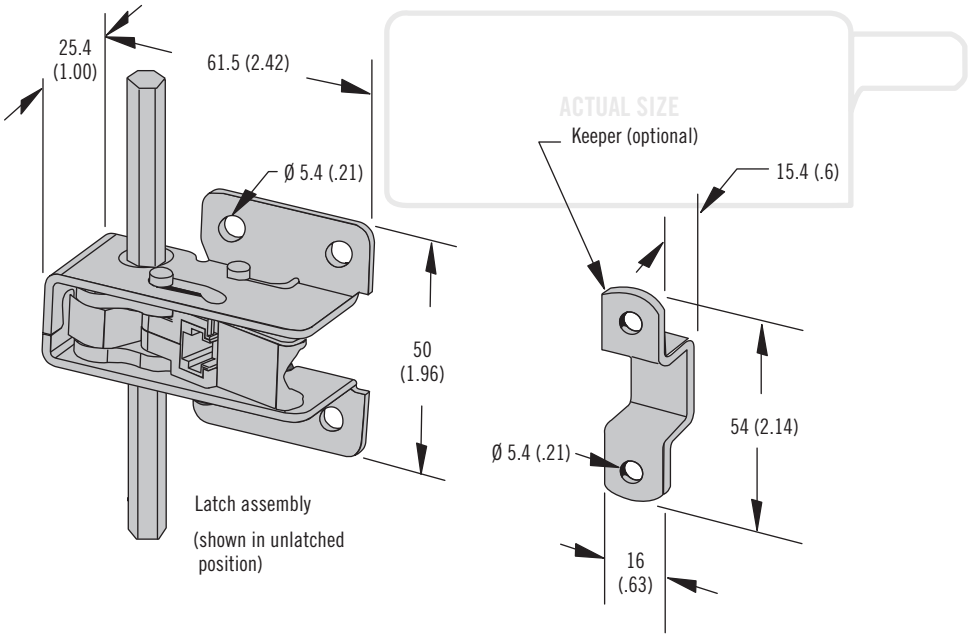

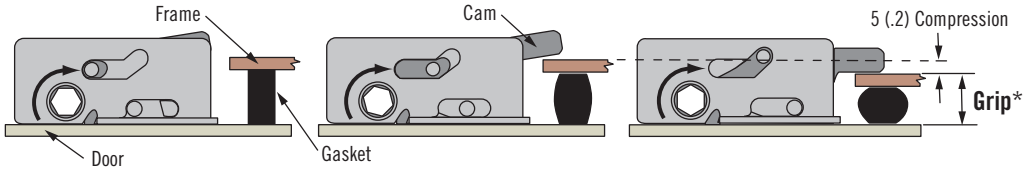

* Measure your **Grip** from the latch mounting surface to the inside frame surface, with gasket compressed

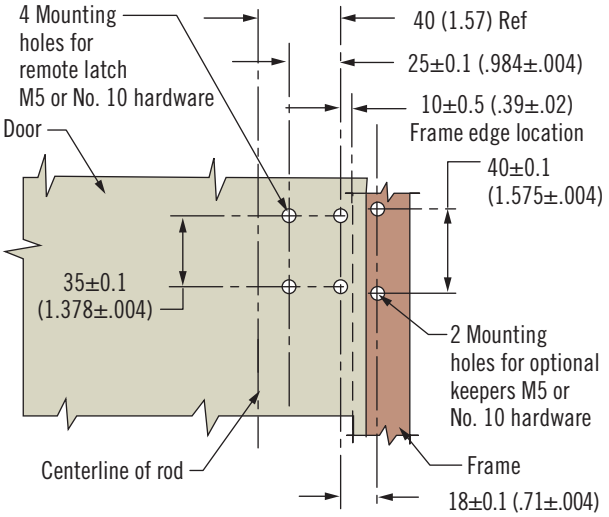

Inside view

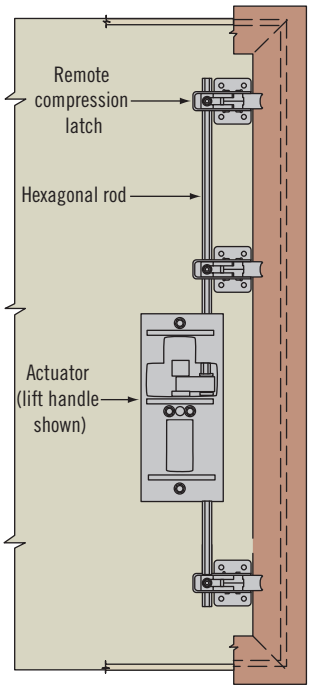

Part Number	
Remote compression latch	M3-50
Keeper (optional) use for grip ranges 15 - 30 (.59 - 1.18)	M3-51

Dimensions in millimeters (inch) unless otherwise stated

Lift Handle

Locking options

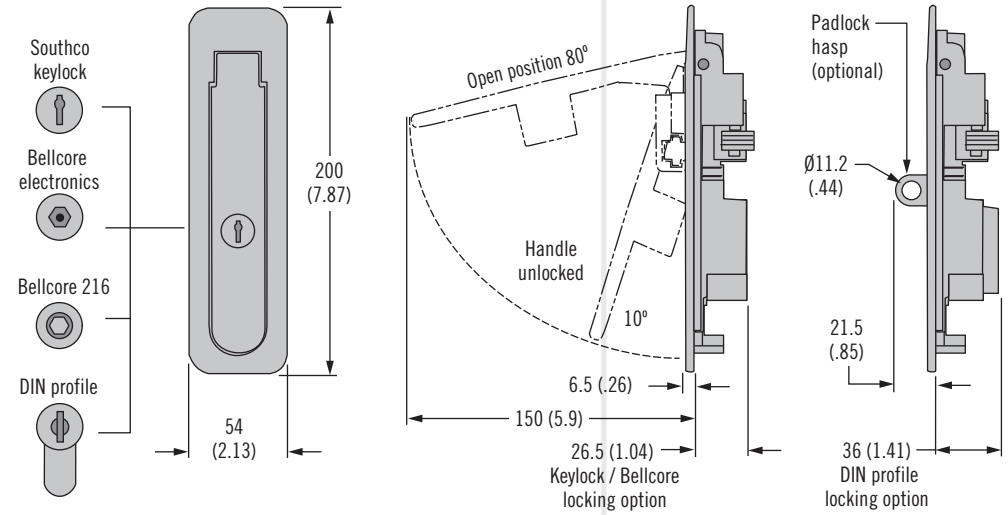

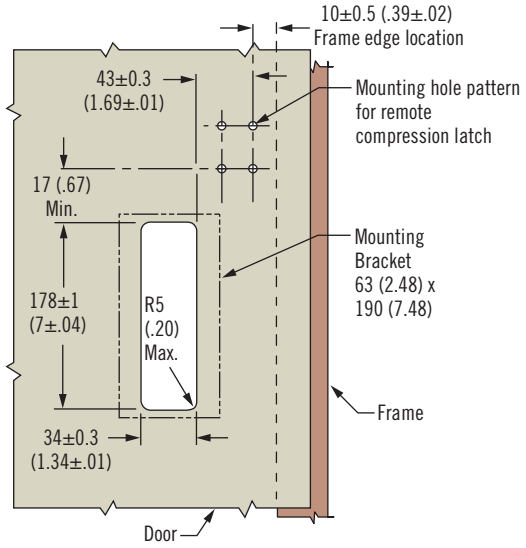

ACTUAL SIZE

- **Suitable for left and right side latching**
- **Meets NEMA 4/ IP66 and EMI standards**
- **Ejecting handle**

Material and Finish

Zinc alloy black powder coated and steel, zinc plated

Sealing Notes

NEMA 4 / IP66 achieved using gasket supplied

DIN Profile Key Part

M3-0-36406

Part Number Selection

P Padlock option
- **0** Non padlock
- **1** Padlockable

M3 - 40 - L P - D

D Door thickness range
- **10** 1.5 - 3 (.06 - .12)
- **11** 3 - 4.5 (.12 - .18)
- **25** 24 - 25.5 (.94 - 1.0)

L Lock style
- **10** Key-locking keyed alike CH751 (two keys supplied)
- **11** DIN profile supplied keyed alike 347876 (three keys supplied)
- **12** DIN profile, lock not supplied
- **13** Push button
- **16** Bellcore 216
- **17** Bellcore electronics

Actuator only

The complete system consists of:
Remote compression latch and/or optional keeper (see page 210)
Actuator (see page 211-214)
Rods (see page 215)

Order each component separately

M3 Compression System

Actuators · Push-button handle

- **Suitable for left and right side latching**

Material and Finish

Zinc alloy, black powder coated and steel, zinc plated

Sealing Notes

NEMA 4 / IP66 achieved using optional gaskets (ordered separately)

Part Number

Actuator and sealing gasket only see table

The complete system consists of:
Remote compression latch and/or optional keeper (see page 210)
Actuator (see pages 211-214)
Rods (see page 215)

Order each component separately

Push-Button Handle

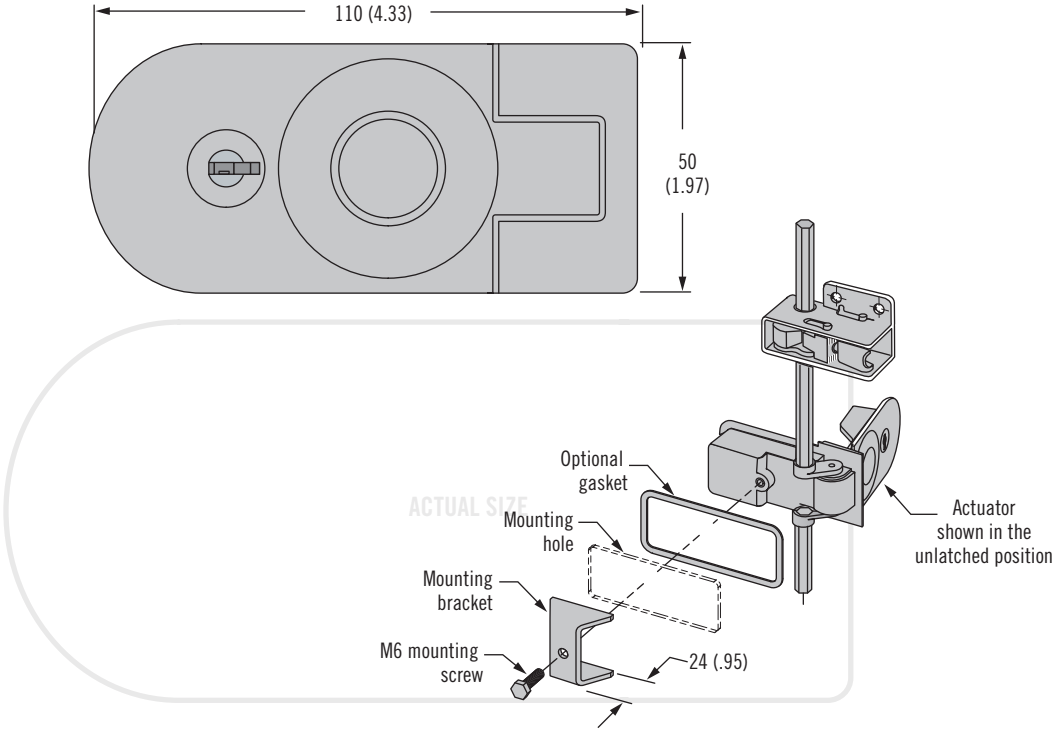

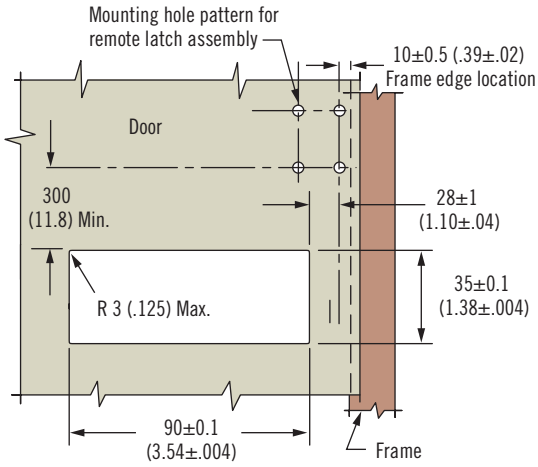

Actuator	Door Thickness Range	Part Number
Push-button handle	0 - 5 (0 - .20)	M3-90
	5 - 10 (.20 - .39)	M3-92
Push-button handle with key-lock	0 - 5 (0 - .20)	M3-91
	5 - 10 (.20 - .39)	M3-93

Sealing Gasket Part Number
C5-82

Dimensions in millimeters (inch) unless otherwise stated

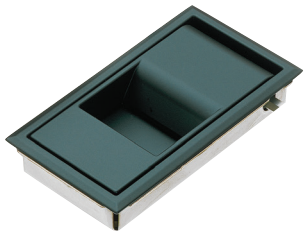

Paddle Handle

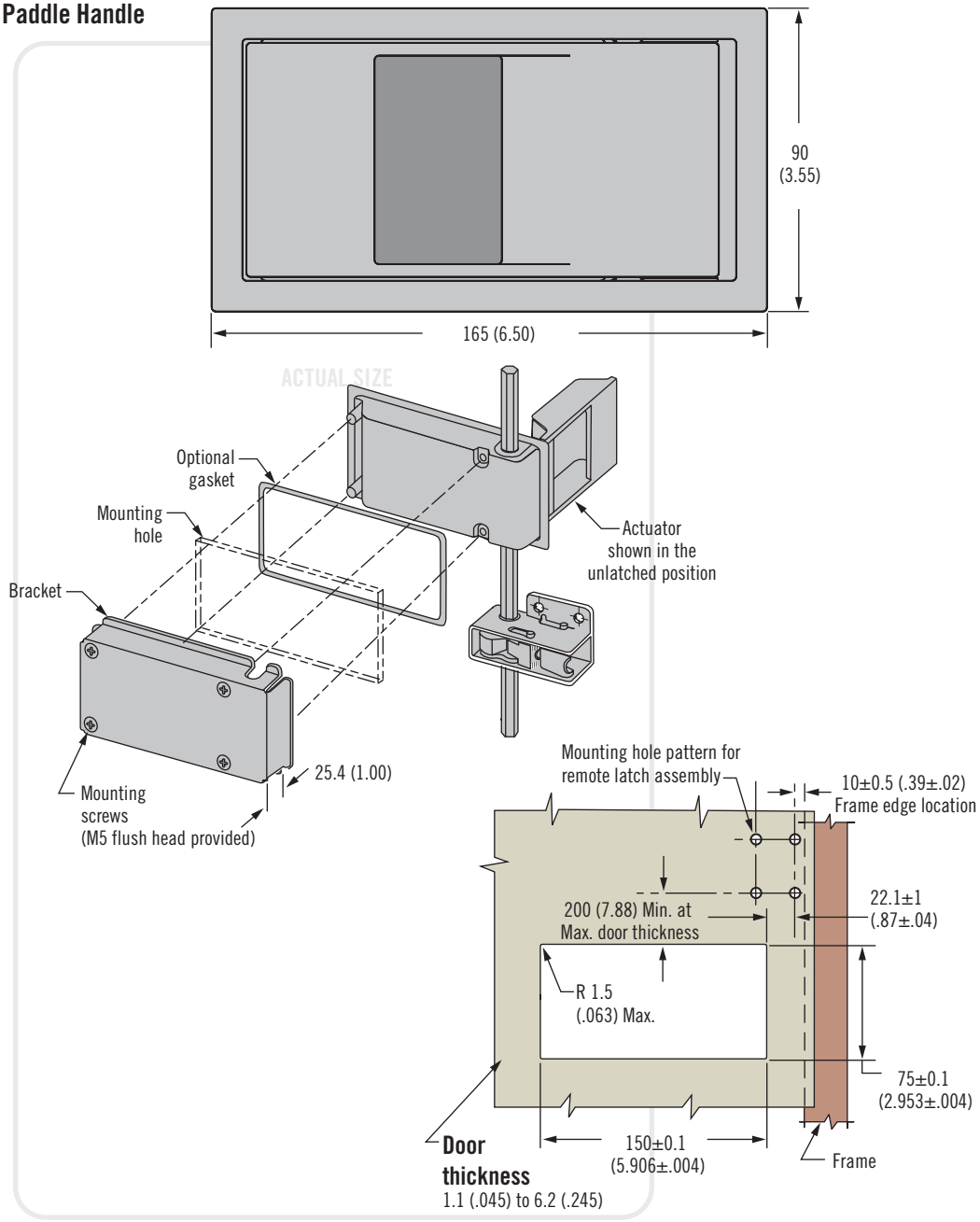

Actuator	Part Number
Paddle (includes bracket and screws)	M3-10
Paddle with key-lock (includes bracket and screws)	M3-17

Gasket Type	Part Number
Environmental	M3-12
EMC	M3-13

- **Suitable for left and right side latching**

Material and Finish

Zinc alloy, black powder coated and steel, zinc plated

Sealing Notes

NEMA 4 / IP66 achieved using gasket supplied

Part Number

Actuator and gaskets only see table

The complete system consists of:
Remote compression latch and/or optional keeper (see page 210)
Actuator (see pages 211-214)
Rods (see page 215)

Order each component separately

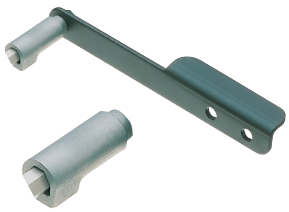

M3 Compression System

Actuators · Door edge lever · Concealed

- **Simple actuator for top or bottom of door**

Material and Finish

Door edge lever: Zinc alloy, black powder coated and steel, zinc plated
Adaptor: Zinc alloy, chemical protective film
Concealed: Zinc alloy, chemical protective film

Notes

Concealed: Operated by 8mm hex wrench (not supplied)

Part Number

Actuator only see table

The complete system consists of:
Remote compression latch
Remote compression latch and/or optional keeper (see page 210)
Actuator (see pages 211-214)
Rods (see page 215)

Order each component separately

Door Edge Lever

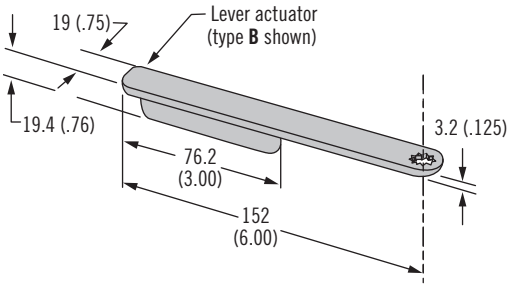

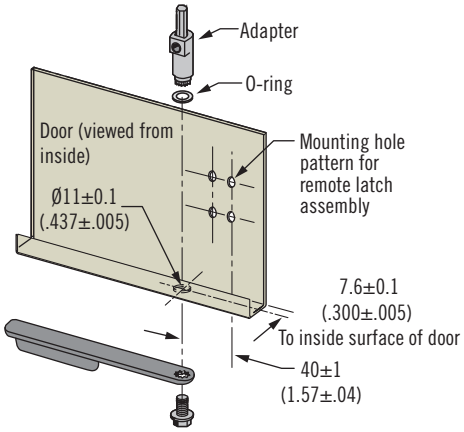

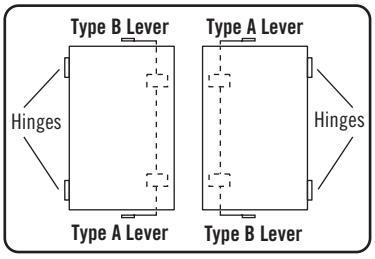

Viewed from outside

Actuator	Type	Part Number
Lever (includes adapter and O-ring)	A	M3-31
	B	M3-32

Concealed

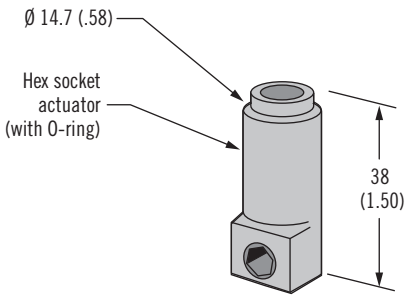

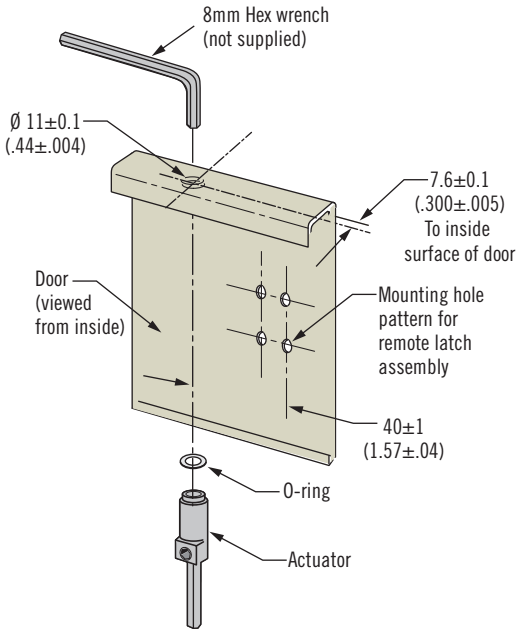

Actuator	Part Number
Hex socket with O-ring seal	M3-30

Dimensions in millimeters (inch) unless otherwise stated

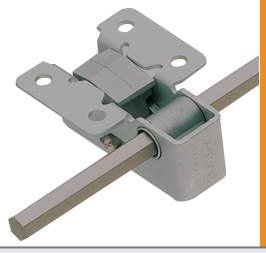

Material and Finish
Stainless steel, natural

Notes
If you choose to use your own rods, they should have no more than 1 degree of twist in any meter length

Part Number
Rod only see table

The complete system consists of:
Remote compression latch and/or optional keeper (see page 210)
Actuator (see pages 211-214)
Rods (see page 215)

Order each component separately

Hexagonal Rod

Hex Rod Length		Part Number
Hex rods (length measured in centimeters)	125 cm	M3-125
	155 cm	M3-155
	185 cm	M3-185

To Determine Rod Length Per Actuator		
For Lift and Paddle Handle	**For Push-Button Handle**	**For Door Edge Lever and 8 mm Hex Socket**
• Use centre to centre distance between farthest remote latches • Add 2 cm	• 2 rods are required • Use the distance from centerline of actuator to centerline of farthest latch assembly • Top and bottom rods may be different length	• Use the distance between the door edge and the centerline of the farthest latch

Calculation Notes
Once you have completed the calculation please order the following parts:
- 1 x Actuator
- 1 or 2 rods to correct length
- Number of compression latches determined from calculation

Calculator
To determine the minimum number of remote compression latches you require along the door edge:

$$N = \frac{L \times R}{470}$$

N = Number of compression latches along door edge (rounded to the nearest whole number)
L = Total length of gasketing material in millimeters
R = Gasket compression rate in N / mm

Example: $\frac{5200 \text{ mm} \times 0.3 \text{ N / mm}}{470} = 3.28 = 3 \text{ latches}$

Remote compression latches should be evenly spaced along edge of door

CR Compression System

Swinghandle actuator

- **Consistent compression**
- **Adjustable grip**
- **Meets NEMA 4 / IP66 and EMI standards**

Material and Finish

Handle actuator:
Zinc alloy black powder coated
Mounting hardware:
Acetal black, stainless steel and brass

Performance Details

Maximum static load:
500 N (110 lbf) per latch point
Average ultimate load:
1400 N (315 lbf)

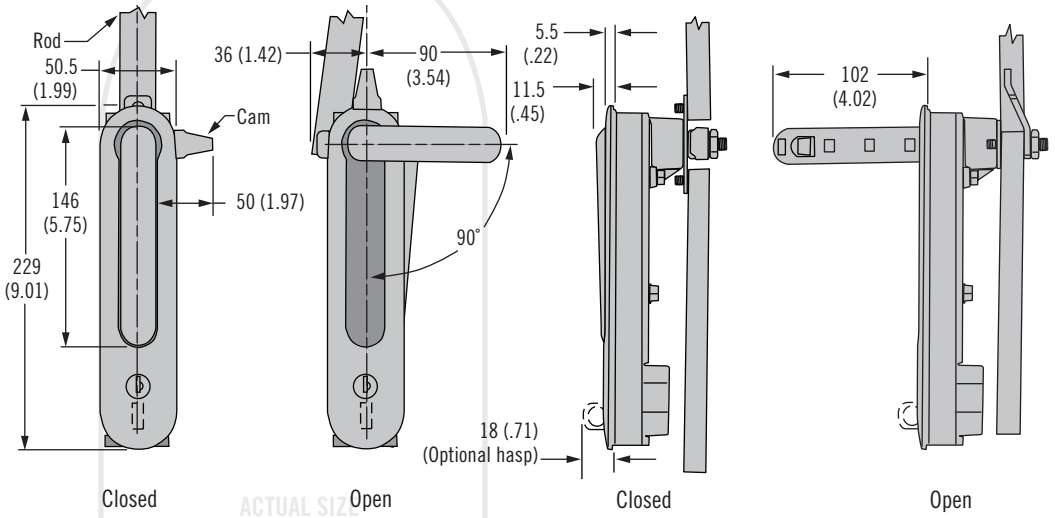

ACTUAL SIZE

Single Skin Door

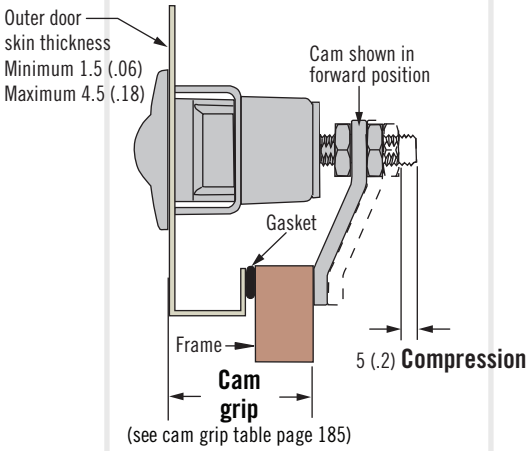

Double Skin Door

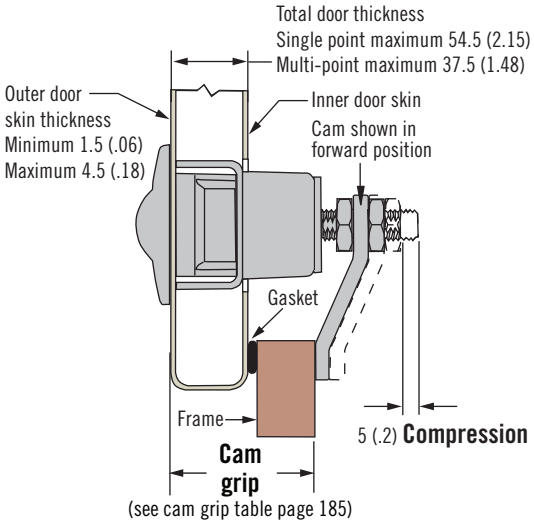

Part Number Selection

See table

Actuator only

The complete system consists of:
Actuator (see part number selector)
Cam (see page 217)
Rod end (see page 218)
Rods (see page 218)
Rod guide (see page 218)
Order each component separately

CR - 19 - L - R 5

L Lock style

- **11** Key-locking keyed alike CH751 (2 keys supplied)
- **21** Keylocking keyed alike CH751 (2 keys supplied) and padlock hasp
- **32** DIN 18354 profile keyed alike 347876 (3 keys supplied)
- **44** Bellcore electronics
- **45** Bellcore 216
- **54** Bellcore electronics and padlock hasp
- **55** Bellcore 216 and padlock hasp

R Rotation

- **1** Universal 180°
- **2** Counter-clockwise 90°
- **3** Clockwise 90°

Dimensions in millimeters (inch) unless otherwise stated

Cam

See page 216 for definition of cam grip

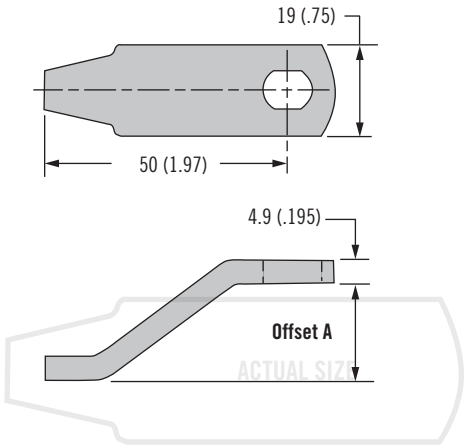

Cam Part Number	Offset A	Cam Grip Range	
		Cam Forward	Cam Reversed
CR-846-1000-24	0 (0.0)	56.5 - 62 (2.23 - 2.44)	
CR-846-1005-24	5 (.20)	51.5 - 57 (2.03 - 2.25)	61.5 - 67 (2.42 - 2.64)
CR-846-1010-24	10 (.39)	46.5 - 52 (1.83 - 2.05)	66.5 - 72 (2.62 - 2.84)
CR-846-1015-24	15 (.59)	41.5 - 47 (1.64 - 1.85)	71.5 - 77 (2.82 - 3.03)
CR-846-1020-24	20 (.79)	36.5 - 42 (1.44 - 1.66)	76.5 - 82 (3.01 - 3.23)
CR-846-1025-24	25 (.98)	31.5 - 37 (1.24 - 1.46)	81.5 - 87 (3.21 - 3.43)
CR-846-1030-24	30 (1.18)	26.5 - 32 (1.05 - 1.26)	86.5 - 92 (3.41 - 3.62)
CR-846-1035-24	35 (1.38)	21.5 - 27 (.85 - 1.07)	91.5 - 97 3.60 - 3.82)
CR-846-1040-24	40 (1.58)	16.5 - 22 (.65 - 87)	96.5 - 102 (3.80 - 4.02)
CR-846-1045-24	45 (1.77)	11.5 - 17 (.46 - .67)	101.5 - 107 (3.99 - 4.22)
CR-846-1050-24	50 (1.97)	6.5 - 12 (.26 - .47)	106.5 - 112 (4.19 - 4.41)

Material and Finish

Stainless steel

Part Number

Cam see table

The complete system consists of:
Actuator (see page 216)
Cam (see page 217)
Rod end (see page 218)
Rods (see page 218)
Rod guide (see page 218)

Order each component separately

Assembly

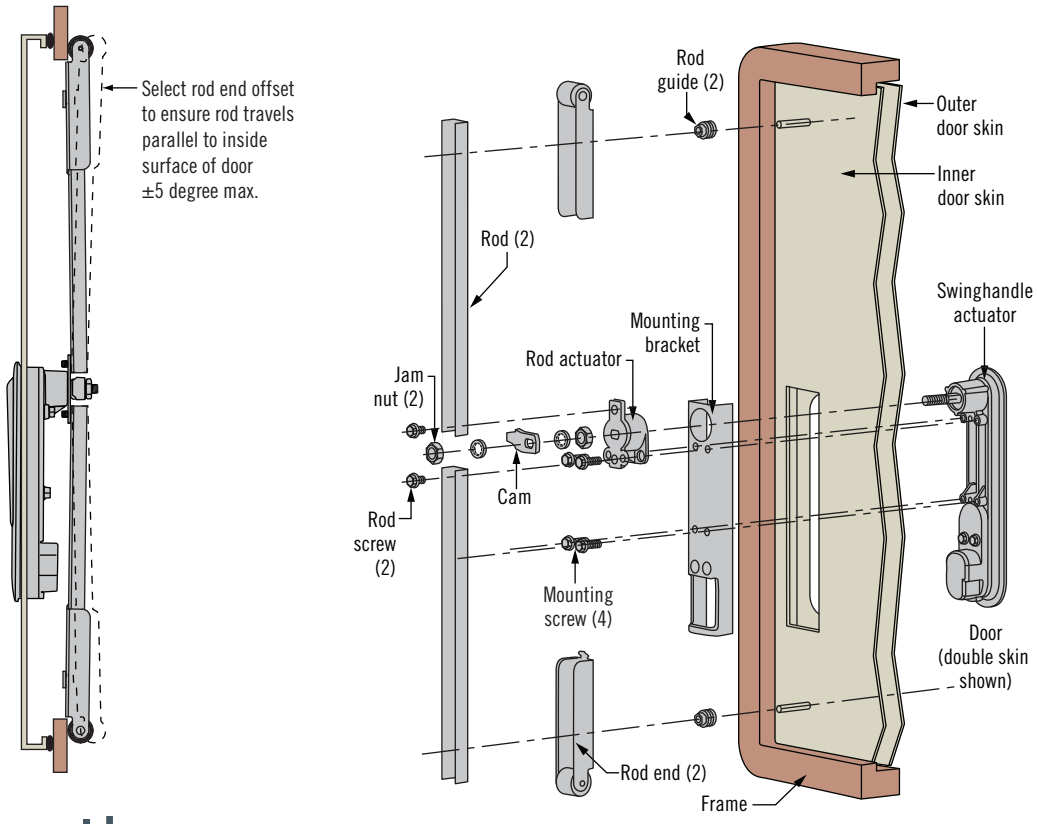

CR Compression System

Rod end · Rod · Rod guide · Installation

Material and Finish

Rod end: Stainless steel and nylon, black
Rod: Aluminum
Rod guide: Brass

Notes

Rod end: When more than one rod end fits desired rod end grip range select the part number with the lowest offset value

Rod: Sold separately without mounting hole, in standard length of 1000 (39.37). Rod will need to be cut to desired lengths and mounting holes Ø 8.5 (.33) drilled. Minimum 300 (11.81), Maximum 1000 (39.37)

Rod guide: M6 thread with prevailing torque for vibration resistance

Part Number

Rod end, rod and rod guides see tables

The complete system consists of:
Actuator (see page 216)
Cam (see page 217)
Rod end (see page 218)
Rods (see page 218)
Rod guide (see page 218)

Order each component separately

Rod End - Negative offset shown

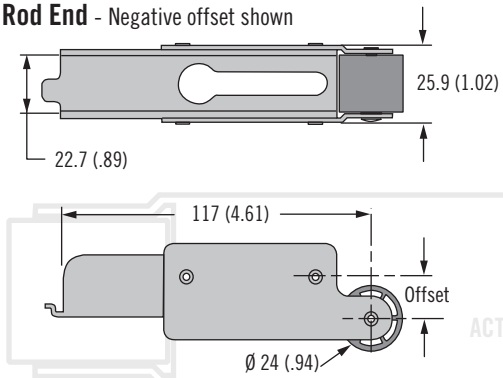

Positive offset shown

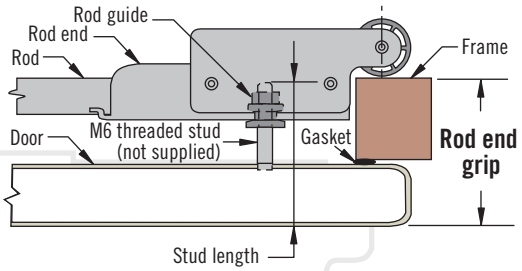

Rod End Grip when used with 1000 (39.37) rod	Offset	Formula for Stud Length $^{+2.5}_{-0}$ ($^{+.1}_{-0}$) Distance from front of door to the end of the threaded stud (not supplied)	Rod End Part Number
40 (1.57) Min. to 124 (4.88) Max.	+30 (1.18)	Rod end grip -16.5 (.65)	CR-51-30-24
25 (.98) Min. to 109 (4.29) Max.	+15 (.59)	Rod end grip -1.5 (.06)	CR-51-15-24
10 (.39) Min. to 94 (3.70) Max.	0 (0)	Rod end grip +13.5 (.53)	CR-50-01-24
5 (.20) Min. to 79 (3.11) Max.	-15 (.59)	Rod end grip +28.5 (1.12)	CR-52-15-24
5 (.20) Min. to 64 (2.52) Max.	-30 (1.18)	Rod end grip +43.5 (1.71)	CR-52-30-24

For your specific application requirement use Southco's online configurator, visit www.southco.com/CR or contact Southco

Example:

Rod end grip = 40 (1.57)
Rod end offset = +15 (.59)
Stud Length = 40 (1.57) - 1.5 (.06) = 38.5 (1.51)

Rod

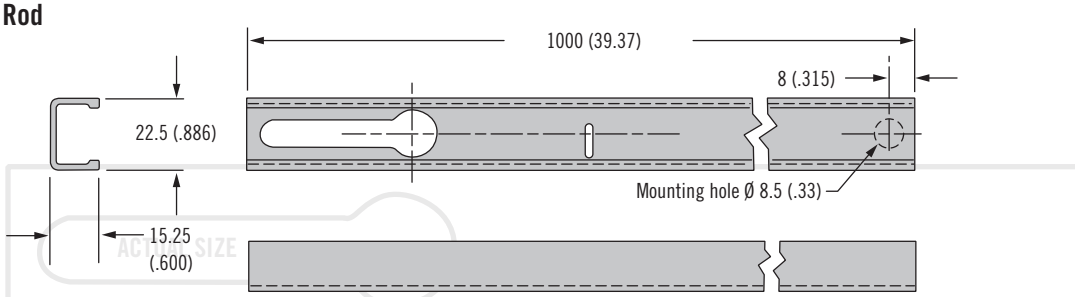

Rod Part Number
CR-64-1000-50

Rod Guide

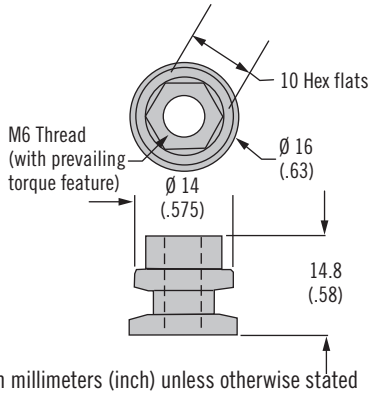

Rod Guide Part Number
CR-843-01-26

Dimensions in millimeters (inch) unless otherwise stated

Installation

Single Skin Door
View From Front

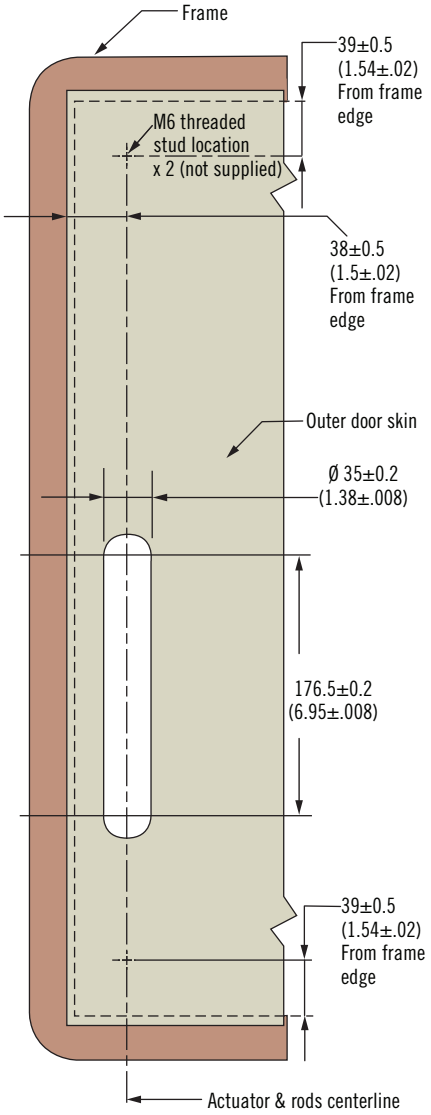

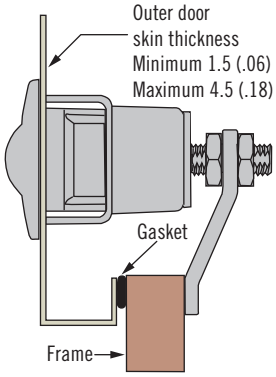

Double Skin Door
View From Front

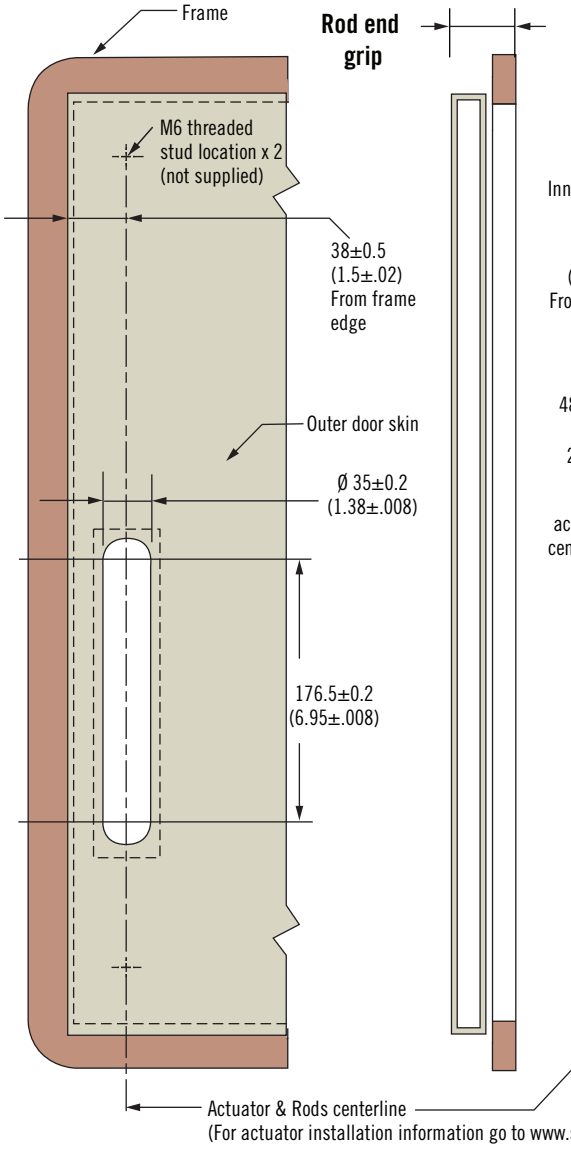

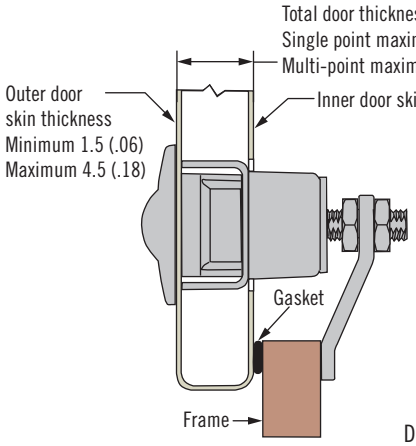

View From Rear

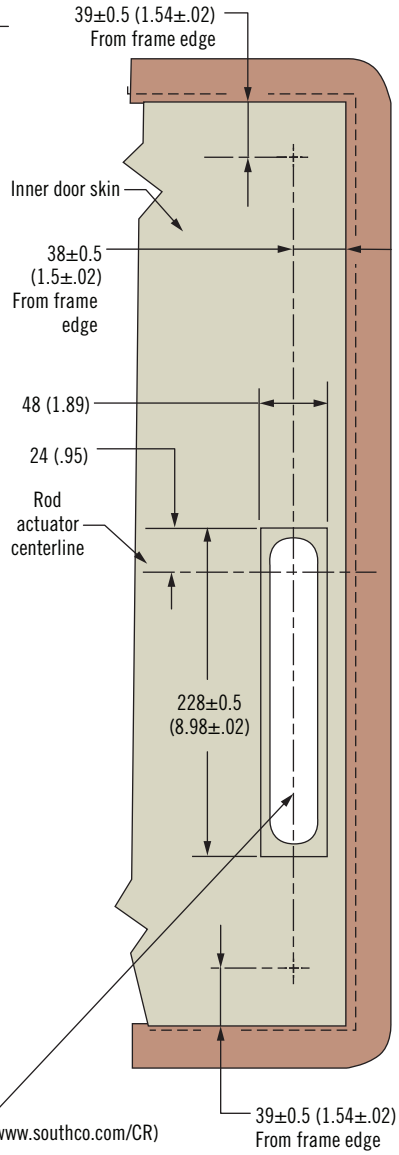

Dimensions in millimeters (inch) unless otherwise stated

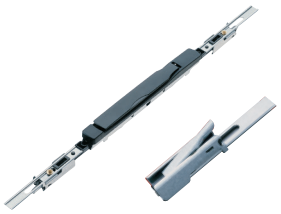

F2 Compression System

System integration

- **Designed for indoor enclosures**
- **Operates outside the enclosure's seal**
- **Installs close to the door edge**
- **System engages when door is up to 15 mm (.59 in) away from the closed position**

Notes

One complete system consists of:
One actuator assembly
(see page 221)
Two rod assemblies
(see pages 222-223)
Keepers (quantity depends on no. of latches specified; see page 223)

Order each component separately

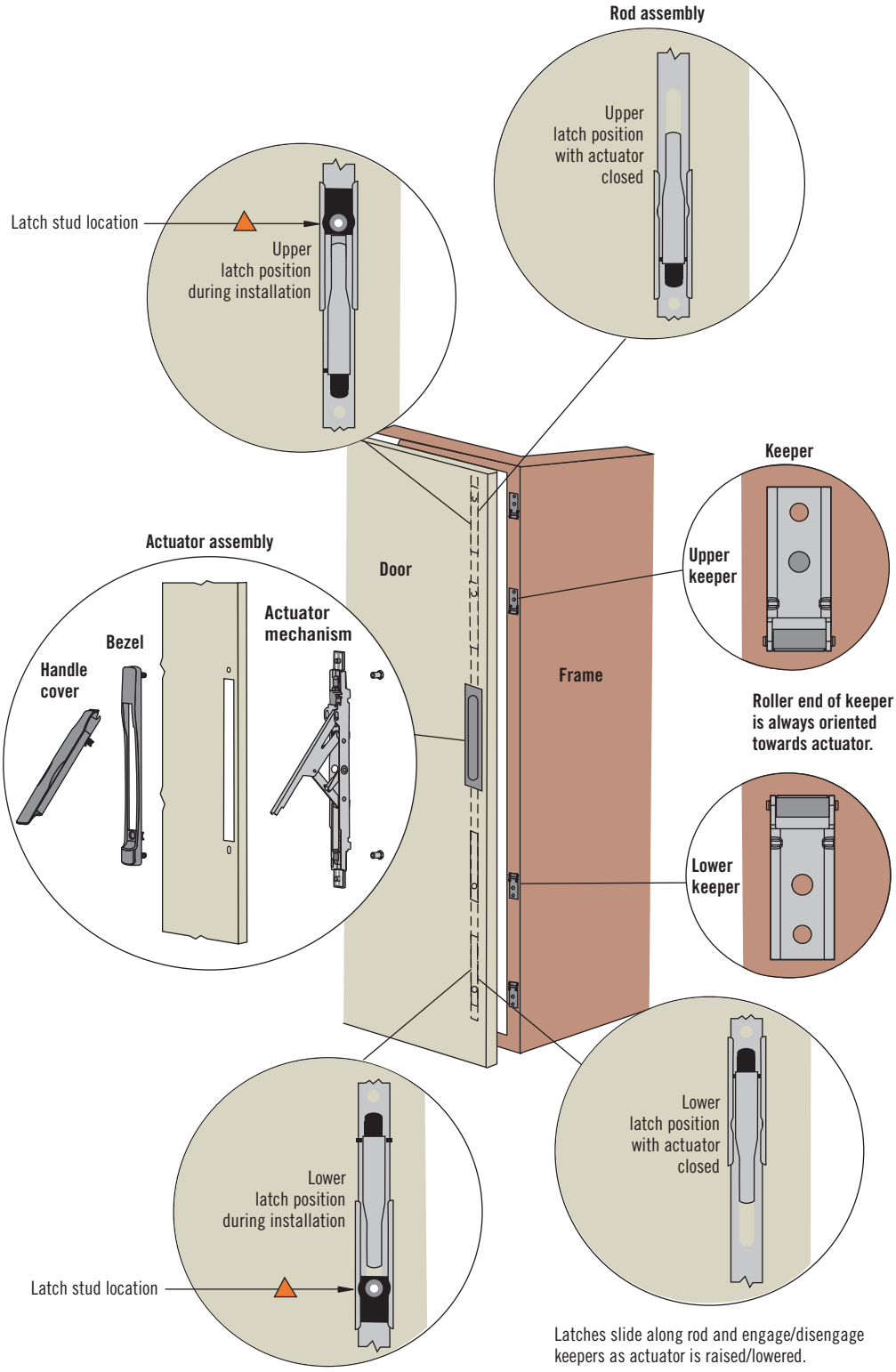

Dimensions in millimeters (inch) unless otherwise stated

Surface Actuator

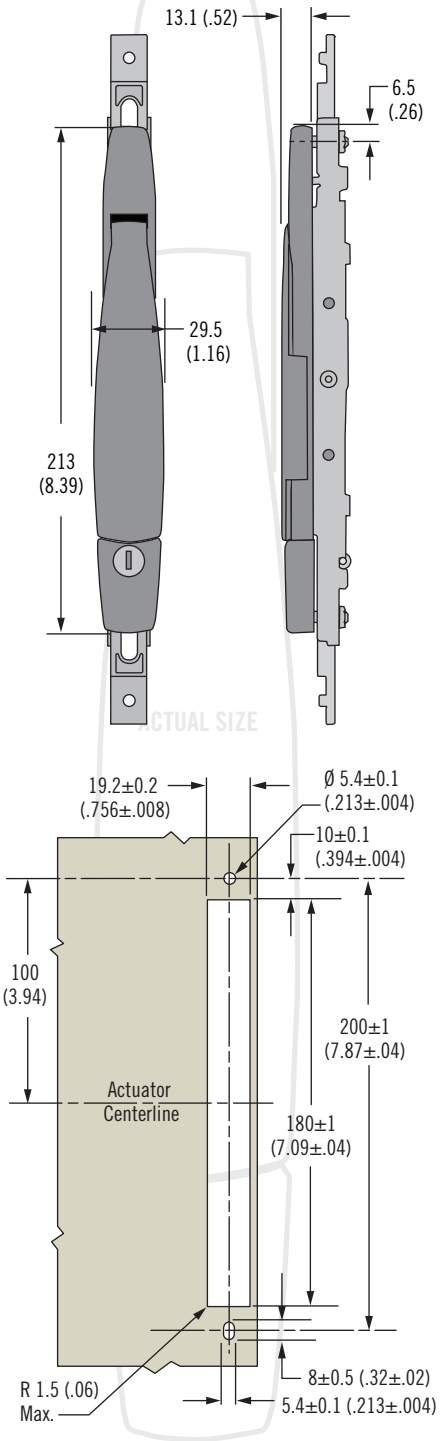

Flush Actuator

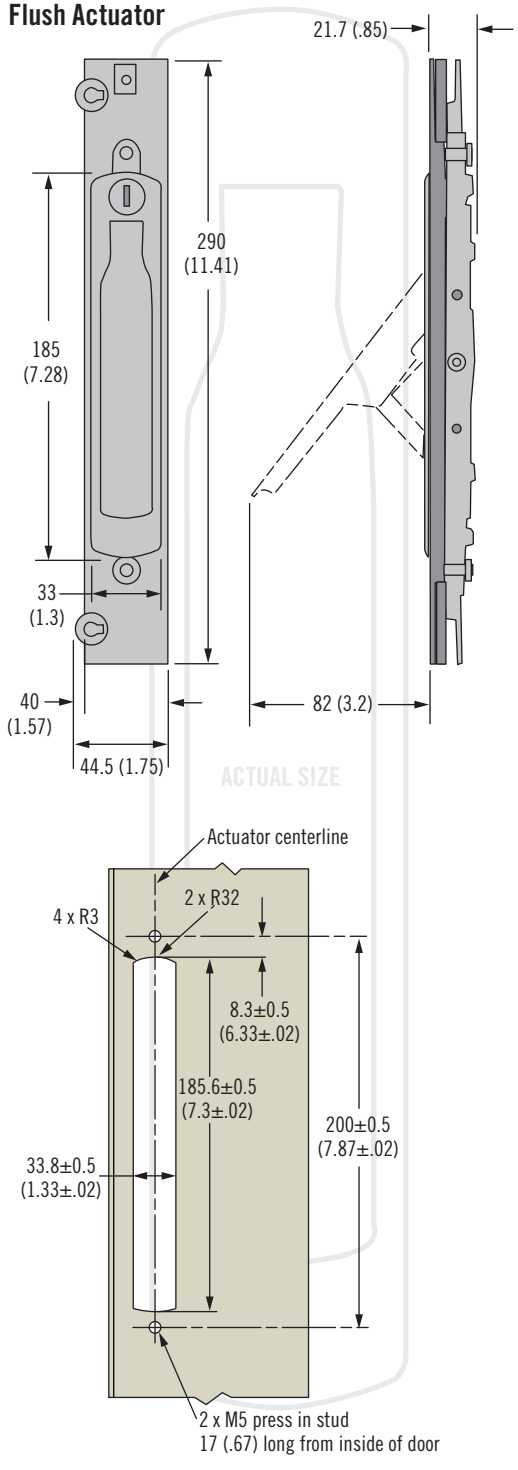

Lock Style	Surface Actuator Part Number	Flush Actuator Part Number
Non-locking	F2-20-17	F2-20-12
Key-locking keyed alike SC001 (two keys supplied)	F2-20-18	F2-20-13
Key-locking keyed alike CH751 (two keys supplied)	F2-20-19	~

- **Designed for indoor enclosures**
- **Operates outside the enclosure's seal**
- **System engages when door is up to 15 mm (.59 in) away from the closed position**

Material and Finish

PC/ABS plastic, black
Zinc alloy and steel, zinc plated

Performance Details

Max. static load:
100 N (22 lbf) per latch point
500 N (112 lbf) for entire system

Flammability rating:
UL94-V0 for all plastic components

Accessories

Flat key keyed alike CH751
(2 keys per ring)
Part number: PK-10-01

Overmolded key keyed alike CH751
(2 keys per ring)
Part number: PK-10-01-05

Plain key SC001 (2 keys per ring)
Part number: FK-KEY-SC001

Part Number

Actuator only see table

One complete system consists of:
One actuator assembly
(see page 221)
Two rod assemblies
(see pages 222-223)
Keepers (quantity depends on no. of latches specified; see page 223)

Order each component separately

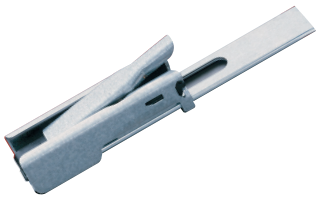

F2 Compression System

Rod assembly · High compression

- **Multiple lengths and latching point locations**
- **Latching mechanisms engage keepers when door is up to 15 mm (.59 in) away from the closed position**

Material and Finish

PC/ABS plastic black, zinc alloy and steel, zinc plated

Installation Notes

Latch installation stud is not supplied. Use M5 press-in studs or non-flanged weld studs. Length is 6 (.24) to 10 (.39) Maximum, measured from inside surface of the door. Example: F2-10-625-25

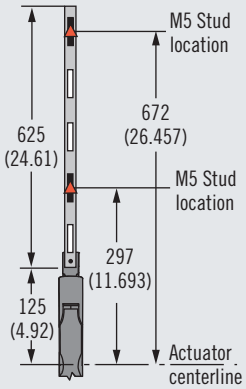

Stud must be positioned within 0.2 (.008) of nominal

Part Number

High compression rod assembly only see table

One complete system consists of:
One actuator assembly (see page 221)
Two rod assemblies (see pages 222-223)
Keepers (quantity depends on no. of latches specified; see page 223)

Order each component separately

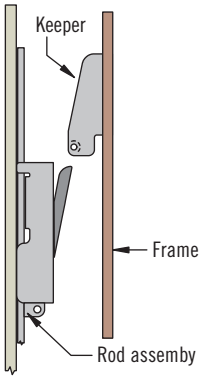

Unlatched

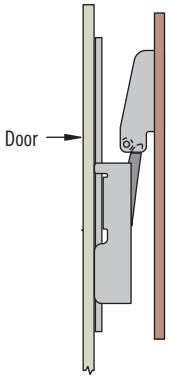

Engaged

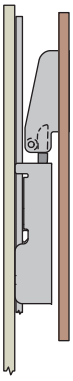

Latched

Rod Length	Latch Installation Stud Locations from Centerline of Actuator	Part Number								
		F2-10-125-1	F2-10-250-2	F2-10-375-3	F2-10-375-13	F2-10-500-14	F2-10-625-25	F2-10-750-26	F2-10-750-36	F2-10-875-37
125 (4.92)	172 ▲ (6.772)									
250 (9.84)	297 ▲ (11.693)									
375 (14.76)	422 ▲ (16.614)									
500 (19.69)	547 ▲ (21.535)									
625 (24.61)	672 ▲ (26.457)									
750 (29.53)	797 ▲ (31.378)									
875 (34.45)	922 ▲ (36.299)									

▭ - No Latch Point
▬ - Latch Point
● - Actuator Connection
▲ - Latch Stud Location

Dimensions in millimeters (inch) unless otherwise stated

F2 Compression System
Rod assembly · Flexible

Rod and Cam Assembly

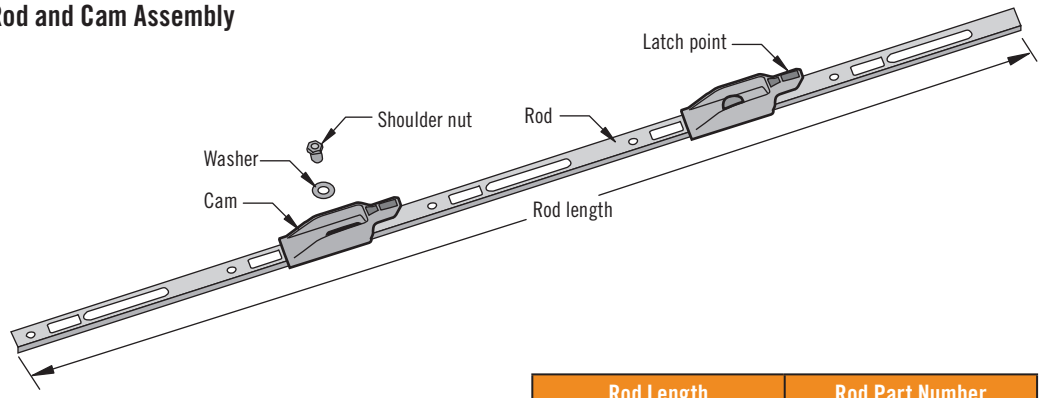

Cam Assembly Part Number	
Hardware pack assembly contains 1 x cam, washer and shoulder nut (order 1 hardware pack per latching point)	F2-50-1

Rod Length	Rod Part Number
125 (4.92)	F2-11-125-19
250 (9.84)	F2-11-250-19
375 (14.76)	F2-11-375-19
500 (19.69)	F2-11-500-19
625 (24.61)	F2-11-625-19
750 (29.53)	F2-11-750-19
875 (34.45)	F2-11-875-19

- **Flexible mounting options**

Material and Finish
Glass-filled nylon black, brass and steel, zinc plated

Part Number
Rod and cam assembly only see table

The complete system consists of:
One actuator assembly (see page 221)
Two rod assemblies (see pages 222-223)
Keepers (quantity depends on no. of latches specified; see page 223)

Order each component separately

www.southco.com/F2

F2 Compression System
Keeper

Keeper

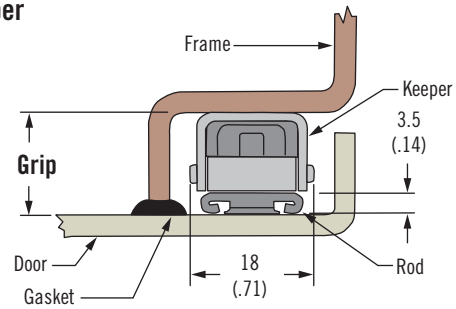

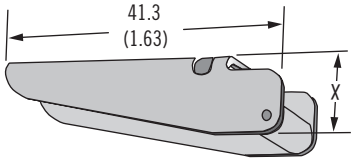

Grip	Part Number	X	Rod System Compatibility	
			High Compression	Flexible
15 (.59)	F2-30-15	11.5 (.45)	✔	~
19 (.75)	F2-30-19	15.5 (.61)	✔	✔
20 (.79)	F2-30-20	16.5 (.65)	✔	✔
22 (.87)	F2-30-22	18.5 (.73)	✔	✔
25 (.98)	F2-30-25	21.5 (.85)	✔	✔

- **Keeper roller provides for smooth operation**

Notes
Order one keeper per latching point

Part Number
Keeper only see table

One complete system consists of:
One actuator assembly (see page 221)
Two rod assemblies (see pages 222-223)
Keepers (quantity depends on no. of latches specified; see page 223)

Order each component separately

H3 Swinghandle System

Medium / large · Sealed / non-sealed

- **Zinc alloy swinghandle system**
- **Multiple locking options; including DIN profile**
- **Indoor/outdoor version**
- **Available for medium (125mm x 25mm) and large (150mm x 25mm) door cutout**
- **Linear and rotational systems available**

Material and Finish

Handle: Zinc alloy, black powder coated or satin chrome plated
Cam: Steel, zinc plated

Performance Details

Maximum static load: 250 N (56 lbf)

Sealing Notes

Sealed version meets NEMA 4/IP66 water intrusion standards

Keys

See page 121

Notes

Key removal in unlocked position only available on non-sealed version

Product available to meet *TELCORDIA*® GR-487 contact Southco for details

Electromechanical swinghandle available see pages 40-41

For single point and actuator plate system see pages 186-187

For dimension details of DIN lock version, please contact Southco

For plastic version see page 228.

TELCORDIA is a registered trademark of Telcordia Technologies Inc.

Sealed (H3-50 medium shown)
(Also available in large. See part number selection)

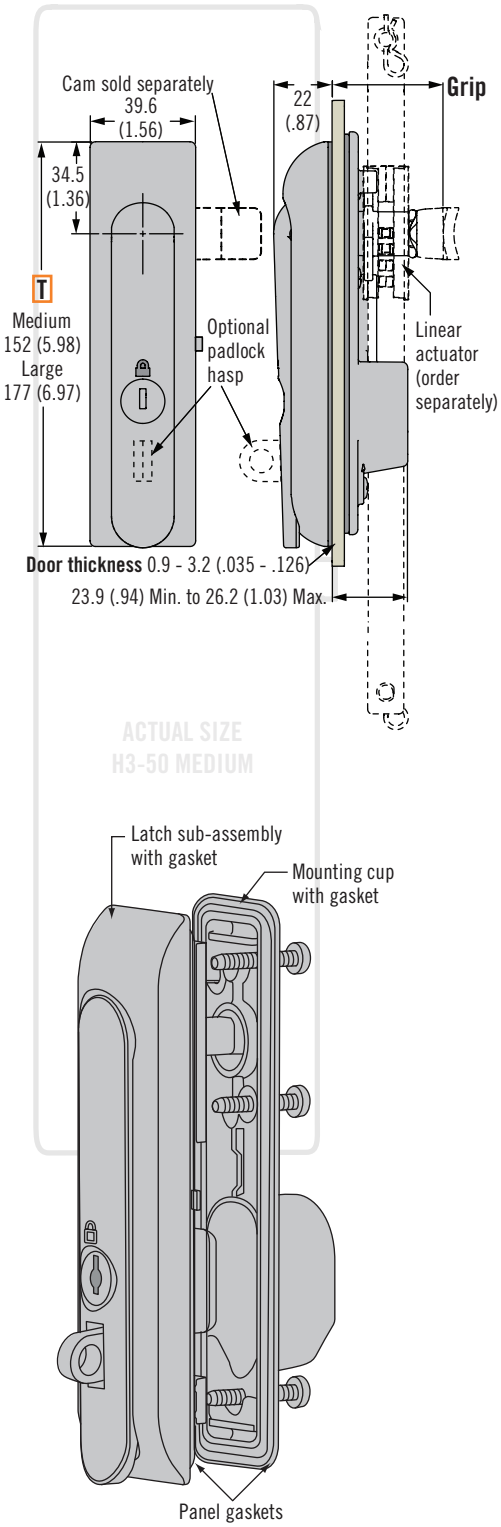

Non-Sealed (H3-60 large shown)
(Also available in medium. See part number selection)

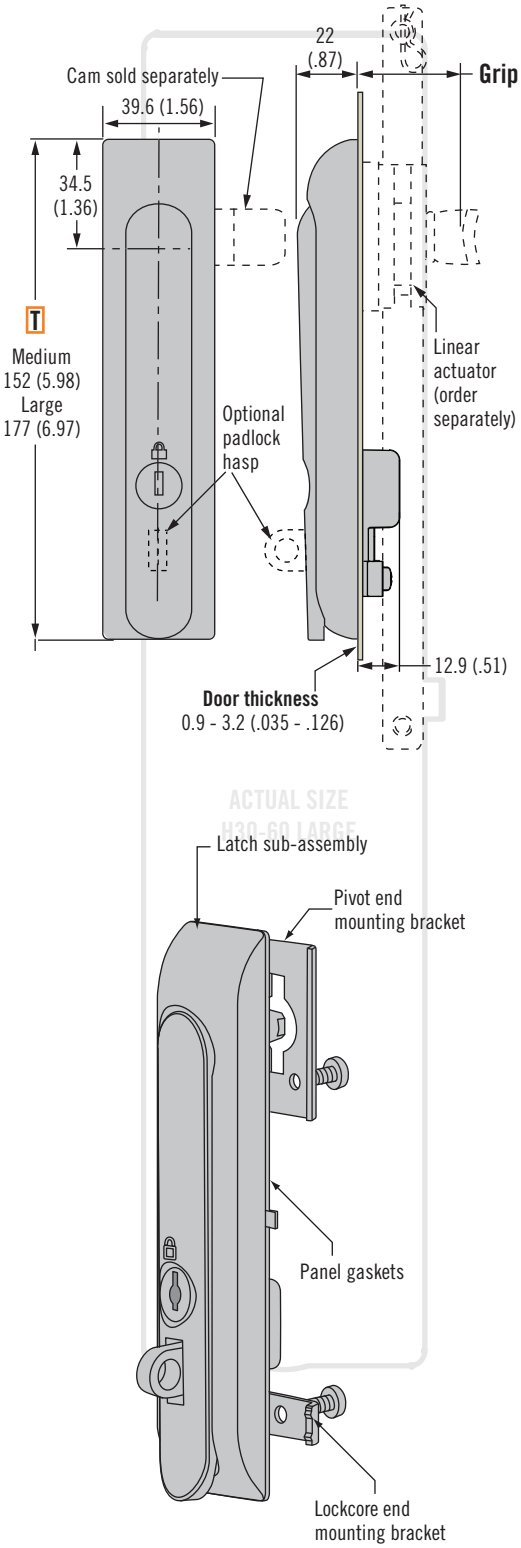

Dimensions in millimeters (inch) unless otherwise stated

Medium H3-50

Large H3-60

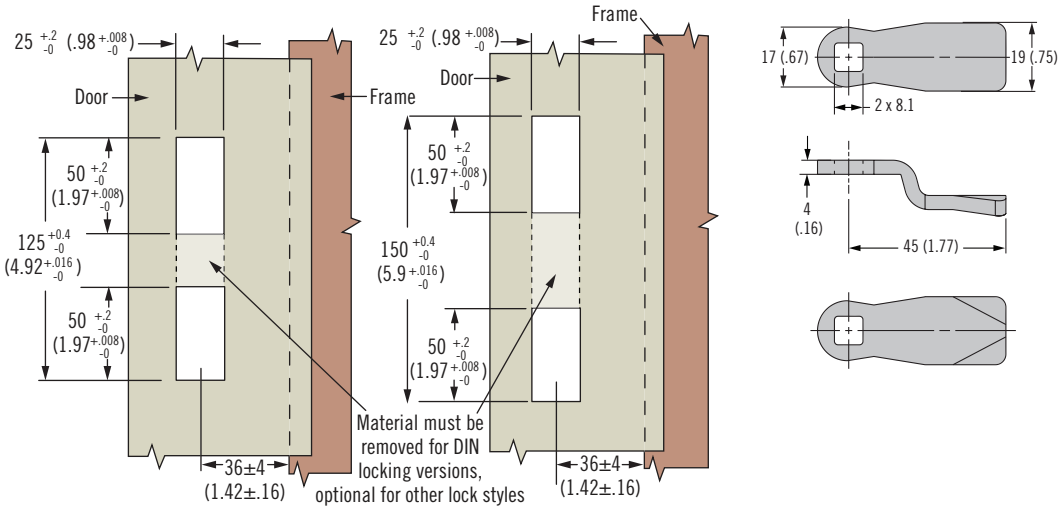

Cam Part Number Table For Use With Linear Actuator Or Actuator Plate					
Grip With Linear Actuator	Grip With Actuator Plate	Part Number	Grip With Linear Actuator	Grip With Actuator Plate	Part Number
~	10.3 (.41)	E5-6107	36.9 (1.45)	26.3 (1.04)	E5-6115
~	12.3 (.48)	E5-6108	38.9 (1.53)	28.3 (1.11)	E5-6116
24.9 (.98)	14.3 (.56)	E5-6109	40.9 (1.61)	30.3 (1.19)	E5-6117
26.9 (1.06)	16.3 (.64)	E5-6110	42.9 (1.69)	32.3 (1.27)	E5-6118
28.9 (1.14)	18.3 (.72)	E5-6111	44.9 (1.76)	34.3 (1.35)	E5-6119
30.9 (1.22)	20.3 (.80)	E5-6112	46.9 (1.85)	36.3 (1.43)	E5-6120
32.9 (1.30)	22.3 (.88)	E5-6113	48.9 (1.93)	38.3 (1.51)	E5-6121
34.9 (1.37)	24.3 (.96)	E5-6114	50.9 (2.00)	40.3 (1.59)	E5-6122

Latch Part Number (no cam)

H3 - T - A L - S F

T Size
- **50** Medium - 152 (5.98) length
- **60** Large - 177 (6.97) length

A Actuator style
- **1** No padlock hasp for use with linear actuator (see page 226)
- **2** With padlock hasp for use with linear actuator (see page 226)
- 3 No padlock hasp for use as single point or with actuator plate (see page 227)
- **4** With padlock hasp for use as single point or with actuator plate (see page 227)

L Lock style
- **00** Locking DIN profile (no lock supplied)
- **01** Locking keyed alike CH751*
- **02** Locking keyed alike 300*
- **03** Locking keyed alike 333*
- **04** Non-locking
- **05** Locking keyed alike HL450
- **20** Non-locking with detent
- **21** Locking DIN profile keyed alike CH751*
- **22** Locking DIN profile keyed alike 300*
- **23** Locking DIN profile keyed alike 333*
- **24** DIN without Lock Plug
- **40** 3 mm Double-bit
- **41** 5 mm Double-bit
- **42** Bellcore 216
- **43** Bellcore Hex-Pin Recess
- **47** 8 mm triangle
- **70** DIN profile 3 mm Double-bit
- **71** DIN profile 5 mm Double-bit
- **72** DIN profile Bellcore 216
- **73** DIN Profile Bellcore Hex-Pin Recess
- **77** DIN profile 8 mm triangle

S Sealing option
- **0** Non-sealed
- **1** Sealed

F Finish
- **44** Satin chrome
- **50** Black powder coated

Part Number Selection

For single point:
Order latch and cam separately (see page 186-187)

For multi-point order:
Latch and cam (if 3 point latching required)
Linear actuator and rod adaptors (see page 226)
Rods (see pages 230-233)
Rod guides (see pages 230-233)

Note

*2 Overmolded keys supplied

H3 Linear Actuator

Linear actuator and rod adaptor

- **Linear actuator for H3 swinghandles**
- **Linear rod travel for limited space**
- **Suitable for left and right hand applications**

Material and Finish

Zinc alloy and steel, zinc plated

To Select Linear actuator and Rod Adaptor:

For use with H3-50 and H3-60 swinghandles (see pages 224-225)
Order linear actuator and rod adaptors separately (1 actuator and 2 adaptors required per latch)

Accessories

Replacement rod adaptor retainer pin part number: H3-0-44778-01

Part Number

Linear actuator and rod adaptors see table

For multi-point order:
Latch (see pages 224-225)
Cam (if 3 point latching required) (see page 225)
Linear actuator and rod adaptor (see table)
Rods (see pages 230-233)
Rod guides (if required) (see page 230)

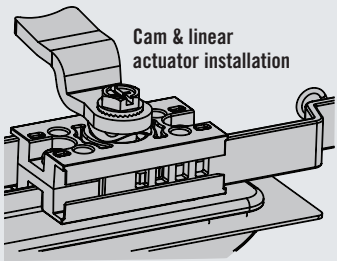

Linear Actuator

Closed Position Open Position

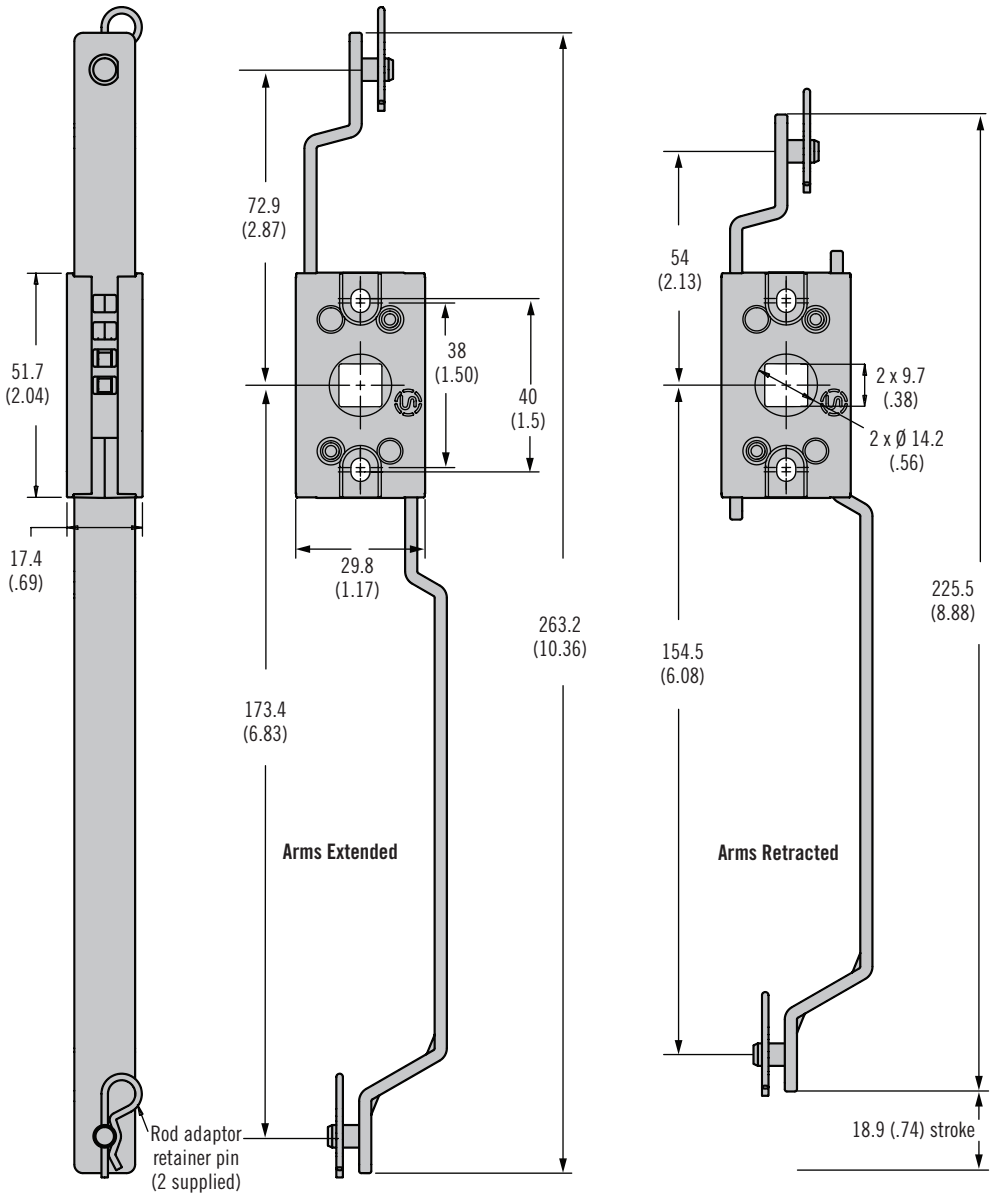

Rod Adaptor

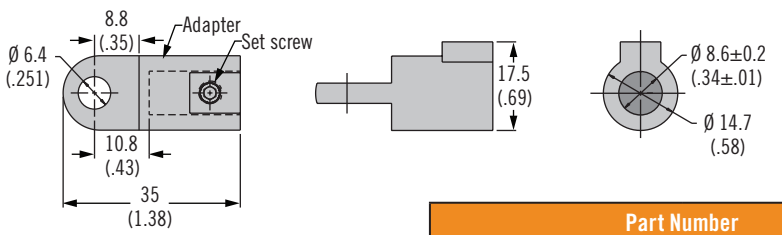

Part Number	
Linear actuator	H3-51-40
Rod adaptor	A5-92-201-31

Dimensions in millimeters (inch) unless otherwise stated

Actuator Plate

A5-90-101-11

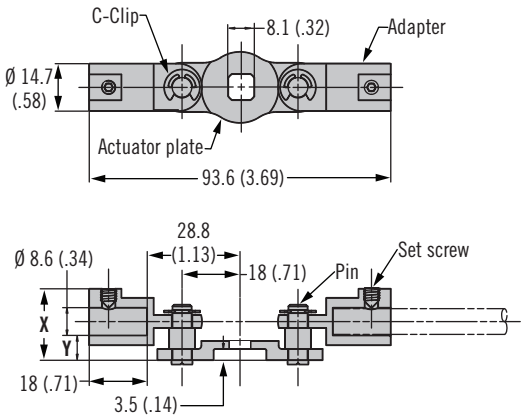

A5-90-301-11

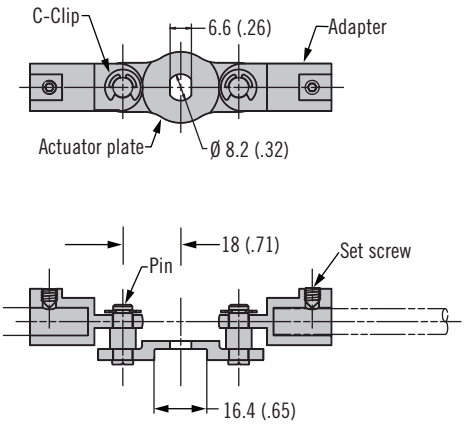

Part Number	X	Y
A5-90-101-11	22.2 (0.87)	4.7 (0.18)
A5-90-104-11	25.2 (0.99)	7.7 (0.30)
A5-90-401-11	22.6 (0.89)	5.1 (0.20)
A5-90-501-11	23.4 (0.92)	5.9 (0.23)

A5-90-401-11 (Short Cam)

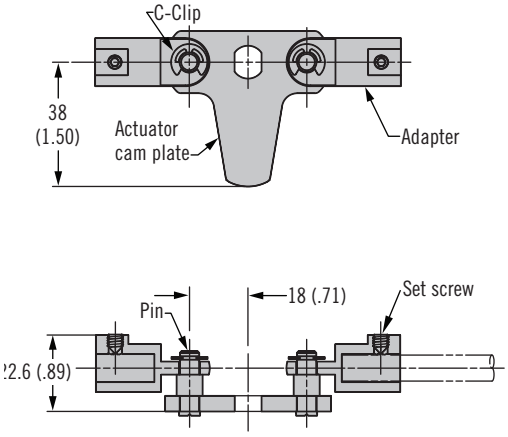

A5-90-501-11 (Long Cam)

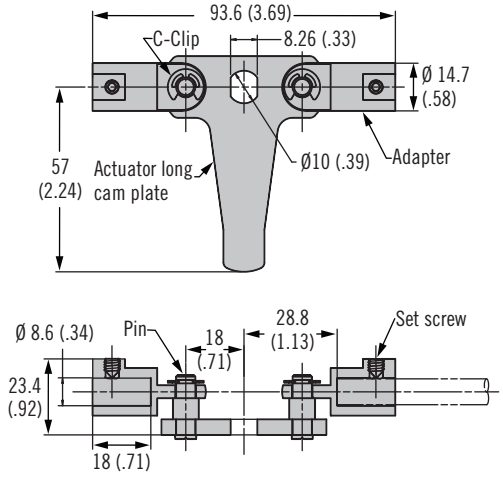

Actuator Plate Part Number								
Operating Latch Families	E5-5	E5-6	E5-9	H3-50	H3-60	62 Series M8 threaded shaft	92 Series M10 threaded shaft	
	Page 152-168			**Page 224-225**		**Page 133**	**Page 176-177**	
Actuator Plate Part Number	A5-90-101-11					A5-90-301-11	A5-90-401-11	A5-90-501-11

- **Modular actuators to suit multiple latch families using A5 modular rods**

Material and Finish

Zinc alloy, steel, zinc plated and stainless steel set screw

To Select Correct Actuator:

1. Choose actuator plate to match latch family (one per latch required)
2. Order rods and rod guides from page 230

Part Number

Actuator plate see table

Rods (see page 230)

Rod guides (see page 230)

H3 Swinghandle System

Plastic · Large · Non-sealed

- **Lightweight Glass filled nylon swinghandle system UL94-V0 rated**
- **DIN profile locking options**
- **Push or turn to close versions available**

Material and Finish

Handle: Glass filled nylon
Cam: Steel, zinc plated

Performance Details

Max. static load: 250 N (56 lbf)

Keys

See page 121

Notes

Electromechanical swinghandle available see pages 40-41

For metal version visit pages 186-187 and 224-225

H3 Plastic Swinghandle

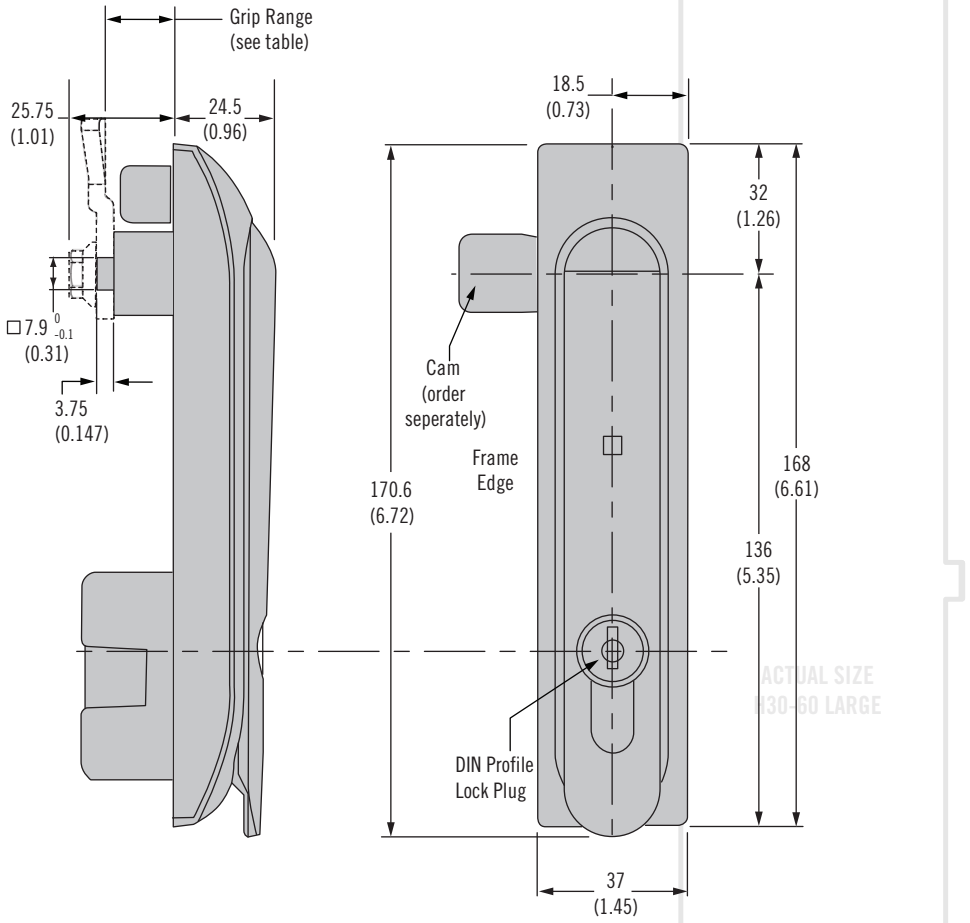

Part Number Selection

For single point:
Order latch and cam separately

For multi-point order:
Latch and cam
Linear actuator and rod adaptors
Rods
Rod guides

Note

*2 keys supplied

Latch Part Number (no cam)

T Style
65 Push to close handle
66 Turn to close handle

H3 - T - 5 L - 0 7 1

L Lock style
00 Locking DIN profile (no lock supplied)
21 Locking DIN profile keyed alike CH751*
22 Locking DIN profile keyed alike 300*
23 Locking DIN profile keyed alike 333*
70 DIN profile 3 mm Double-bit
71 DIN profile 5 mm Double-bit
72 DIN profile Bellcore 216
73 DIN Profile Bellcore Hex-Pin Recess
77 DIN profile 8 mm triangle

Cam Part Number Table

Grip	Part Number (length = 38mm)	Part Number (length = 45mm)
15.5 (.61)	E5-6710	E5-6110
17.5 (.69)	E5-6711	E5-6111
19.5 (.77)	E5-6712	E5-6112
21.5 (.85)	E5-6713	E5-6113
23.5 (.93)	E5-6714	E5-6114
OTHER	Please contact Southco	

Dimensions in millimeters (inch) unless otherwise stated

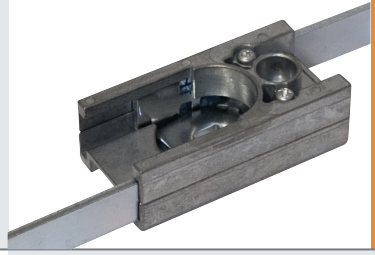

Linear Actuator

(Right Hand Mounting shown)

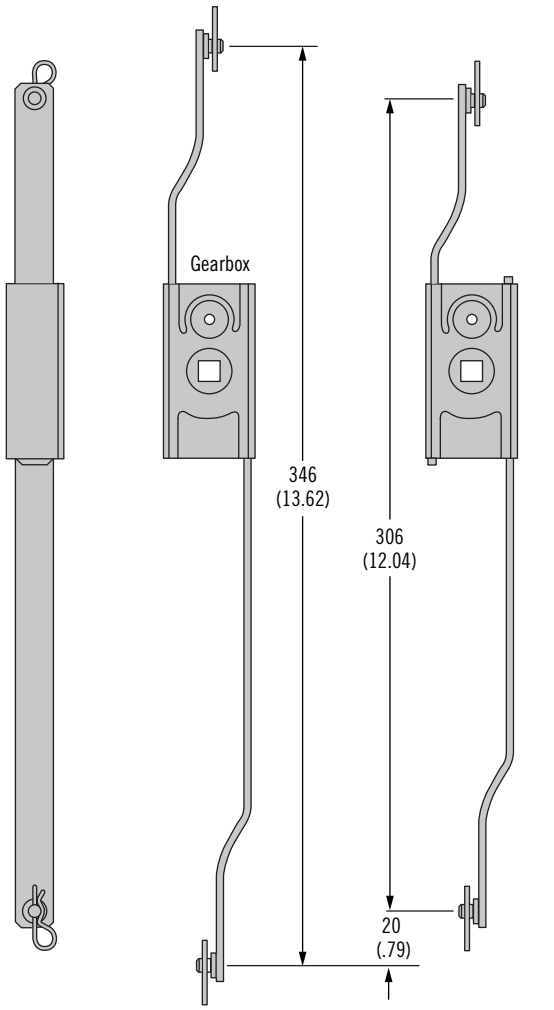

Closed Position Open Position

Panel Preparation

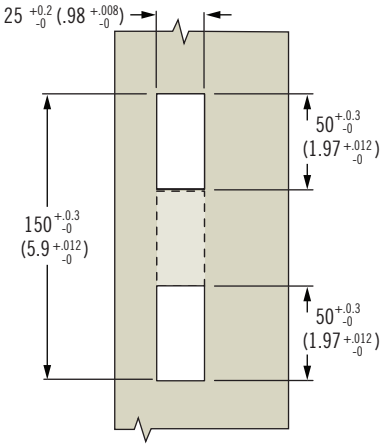

Cam

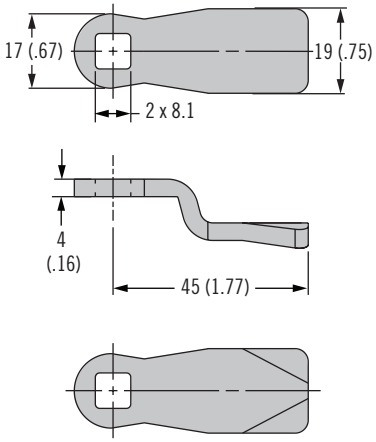

Rod Adaptor

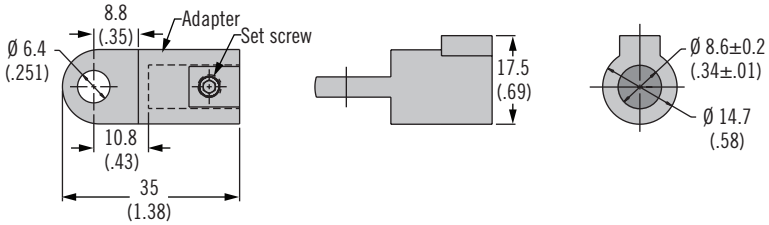

Part Number	
Linear actuator right hand mounting	H3-61-56-33
Linear actuator left hand mounting	H3-61-55-33
Rod adaptor	A5-92-201-31

- **Linear actuator for Plastic H3 swinghandles**
- **Linear rod travel for limited space**
- **Suitable for left and right hand applications**
- **Left and Right hand Actuators can be disassembled and reassembled in the opposite hand if required**

Material and Finish

Zinc alloy and steel, zinc plated

To Select Linear actuator and Rod Adaptor:

For use with H3-EM, H3-65 and H3-66 swinghandles. Order linear actuator and rod adaptors separately (1 actuator and 2 adaptors required per latch)

Accessories

Replacement rod adaptor retainer pin part number: H3-0-44778-01

Part Number

Linear actuator and rod adaptors see table

For multi-point order: Latch
Cam (if 3 point latching required)
Linear actuator and rod adaptor (see table)
Rods, Rod guides

A5 Modular System

Rods and rod guides

- **Modular rod and rod guides**

Material and Finish

Rods: Aluminum or steel, zinc plated
Rod rollers: Glass-filled nylon, black
Rod guides: Glass-filled nylon, black with steel, zinc plated hardware

To Select Correct Assembly:

1. Choose actuator plate to match latch family or linear actuator and 2 adaptors. See drawing J-A5-F30 for rod type and latch family compatibility.
2. Order rod guides (2 per assembly). Fixed rod guide recommended for fixed point rod. Adjustable rod guide recommended for rod roller assembly.
3. Order rods (2 per assembly)

Part Number

Order rod and rod guide separately see tables

Other rod lengths available. Please contact Southco

Rods

Rod Roller

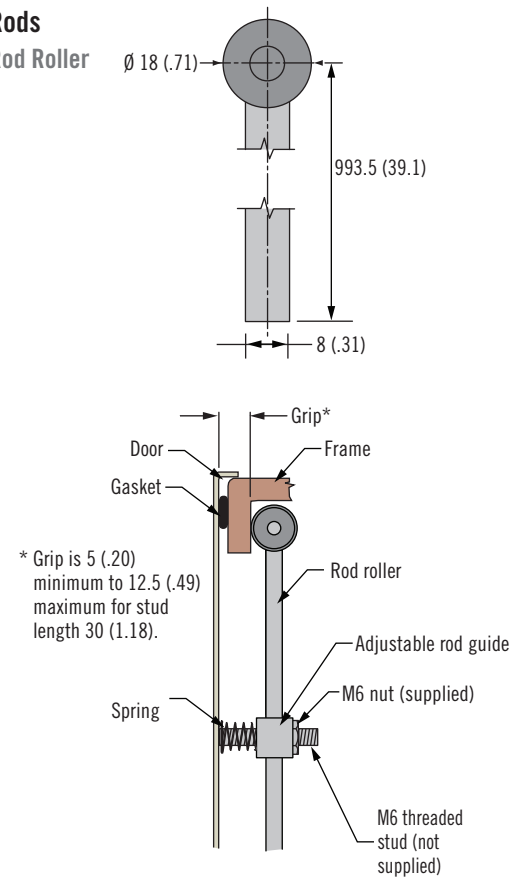

Rod Roller Steel Part Number
A5-56-1000-21

Fixed Point Rod

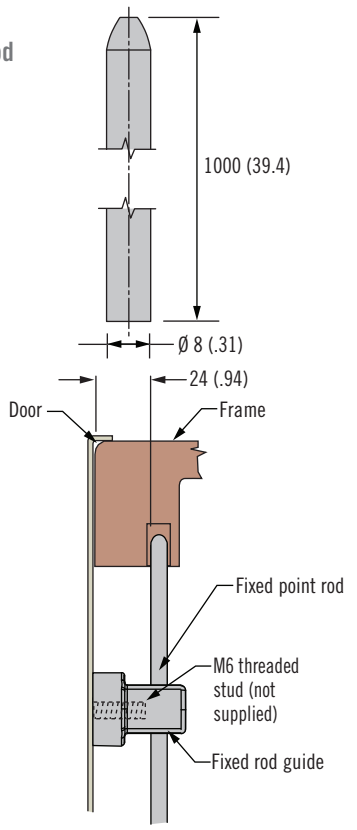

Material	Fixed Point Rod Part Number
Aluminum	A5-55-1000-10
Steel	A5-55-1000-11

Rod Guides

Adjustable

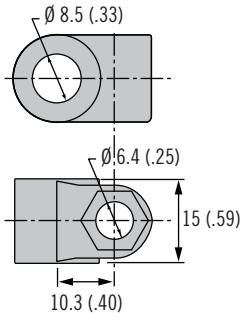

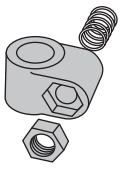

Fixed

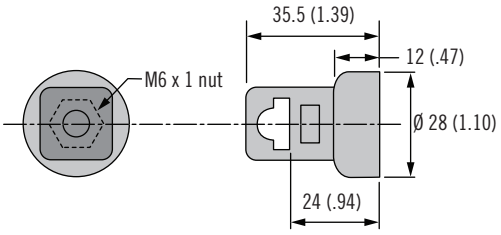

Adjustable Rod Guide Part Number (includes 2 rod guides, 2 springs and 2 M6 nuts)
A5-87-401

Fixed Rod Guide Part Number (one piece supplied)
A5-81-301-71

Dimensions in millimeters (inch) unless otherwise stated

Linear Actuator Assembly
(adjustable with rod roller shown)

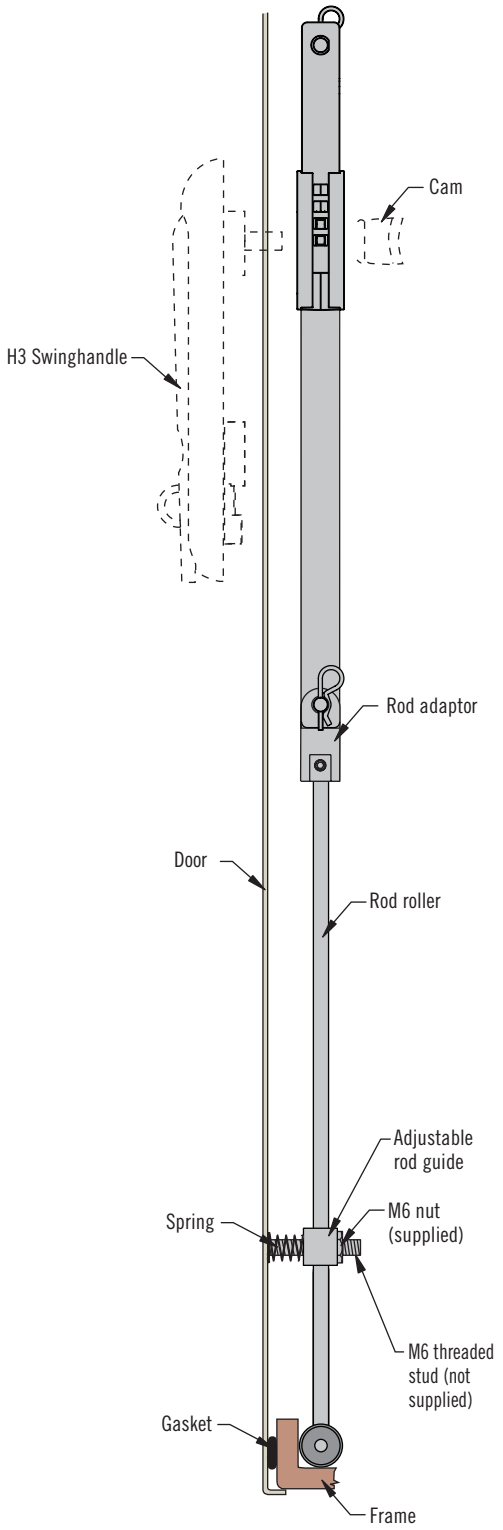

Actuator Plate Assembly
(fixed point shown)

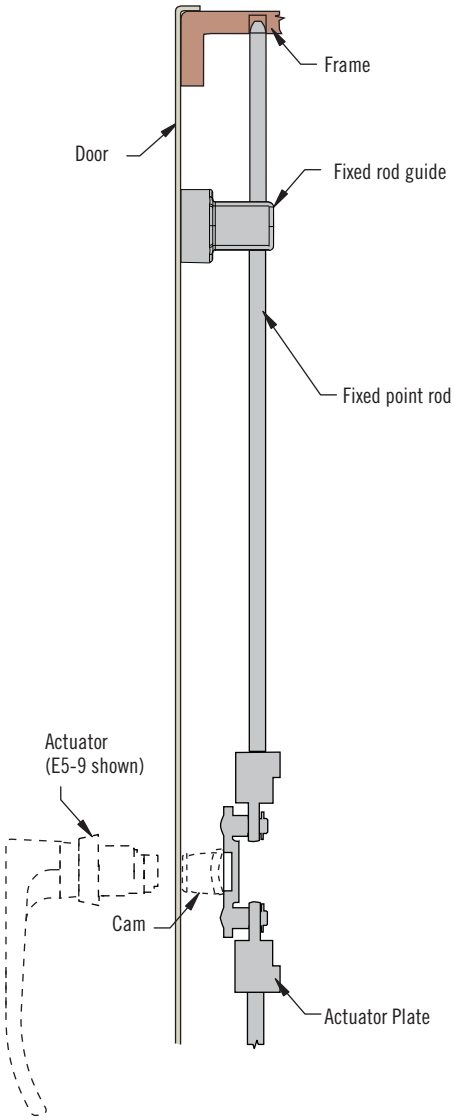

Notes

Modular system allows for any configuration of rod and rod guides

A5 Flat Rod Systems

Rods, Guides, Adapters and Keepers

- **Compatible with standard Southco latches, providing a variety of operating styles**
- **Mid Roller system allows latching outside of gasketed area**

Material and Finish

Rods: Steel, zinc nickel plated
Rod rollers: Stainless Steel or Glass-filled nylon, black
Rod guides: Glass-filled nylon, black
Flat rod keeper: Zinc alloy, black powder coated

To select correct assembly:

1. Determine rod style and length desired
2. Choose actuator plate or linear actuator to match latch family
3. Choose adapter to match latch family
4. Refer to www.southco.com for additional details on offset and lengths

Note

Important: Adapters are used with A5-F30 and A5-F50 Rods only.

Product available to meet *TELCORDIA* GR-487. Contact Southco for details.

TELCORDIA is a registered trademark of Telcordia Technologies, Inc.

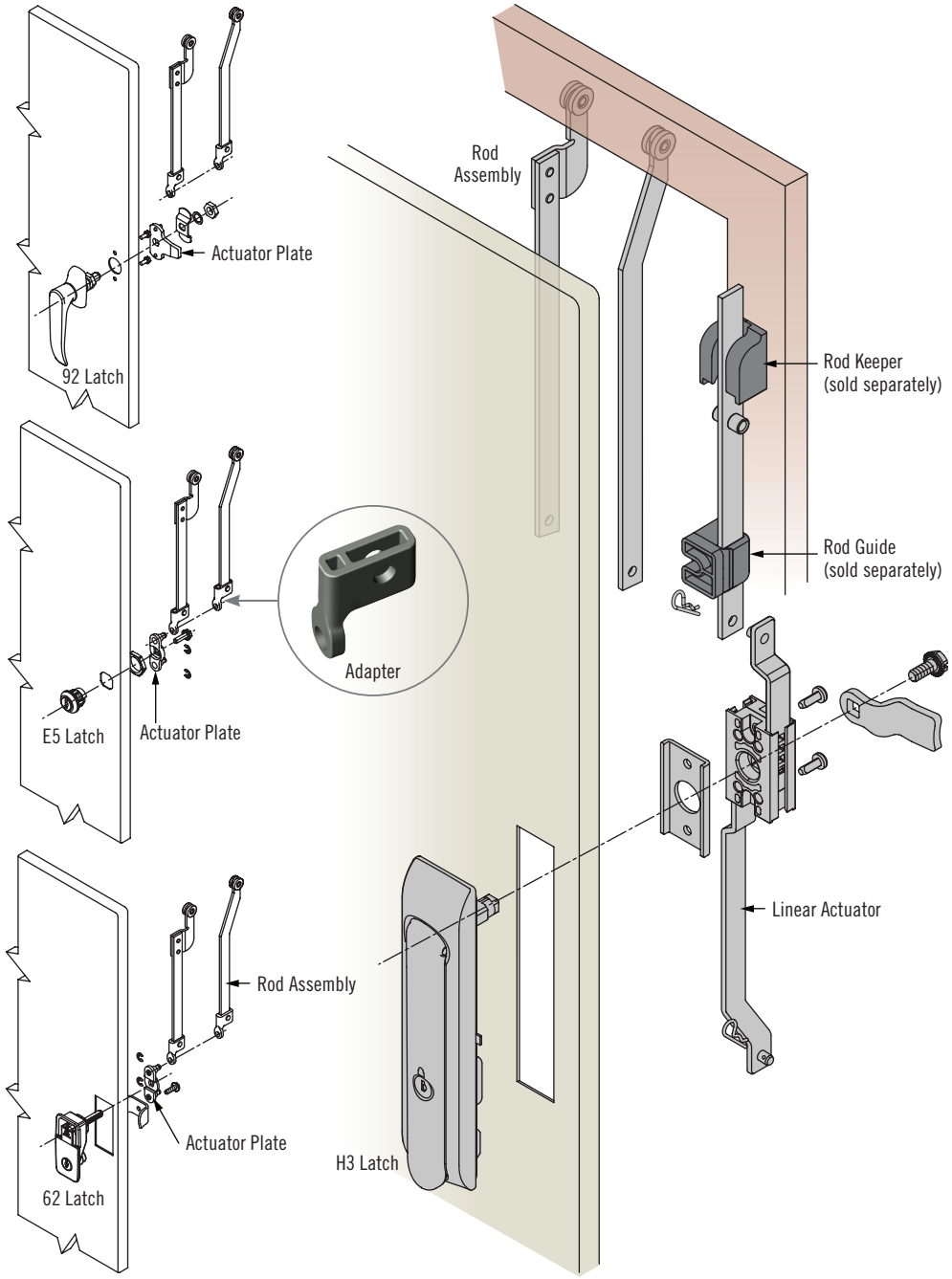

Adapter

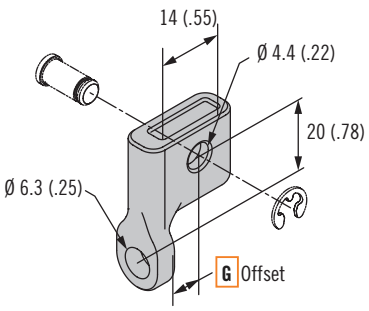

Latch Family	H3	92	E5	62
Adapter Type A	Adapter 1	Adapter 2	Adapter 3	Adapter 4
Offset G	3.25 (.13)	7.8 (.31)	17.25 (.68)	7.55 (-.30)

Dimensions in millimeters (inch) unless otherwise stated

F20 Mid Roller	F30 Offset with Roller	F50 Offset Plate with Roller
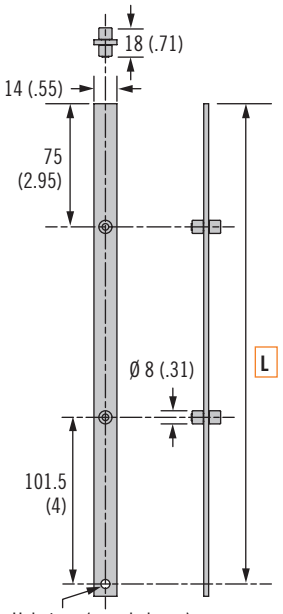	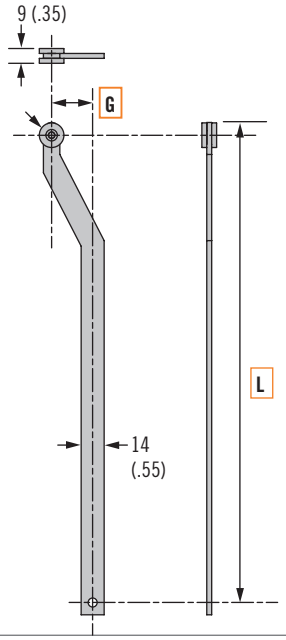	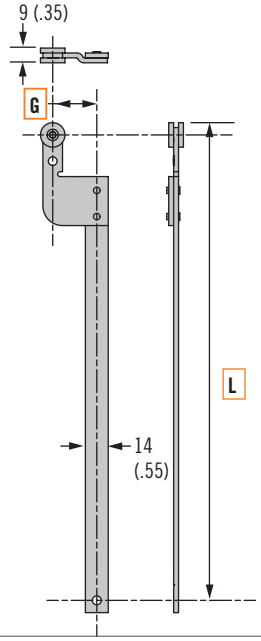
Hole type (round shown) See end views for additional hole types	Important: Adapters are used with F30 and F50 Rods only.	

Rod Assembly Part Number

R Rod Style

2 Mid roller (offset G must be **00**)
3 Offset with roller end
5 Offset Plate with roller end

L Length (mm)
0200 - 1200

A5 - F R A - L A - G - 77

A Adapter Type

0 None (H3 with linear actuator)
1 Adapter - 3.25mm (0.13) (H3 Latches)
2 Adapter - 7.8 (0.31) Offset (92 Latches)
3 Adapter - 17.25 (0.68) Offset (E5 Latches)
4 Adapter - -7.55 (-0.30) Offset (Medium 62 Latches)

G Offset Distance (mm)
20, 25 - (For Rod Style 3)
13, 16, 21, 27 - (For Rod Style 5)

Flat Rod Actuator Plate Part Number

Operating Latch Families	E5-5	E5-6	E5-9	H3-50	H3-60	62 Series M8 threaded shaft	92 Series M10 threaded shaft	
Actuator Plate Part Number	A5-90-102-11					A5-90-303-11	A5-90-401-11	A5-90-501-11
Adapter Type A	A = 3			A = 1		A = 4	A = 2	

Adapters are used with round hole type rods only.

- **Modular actuators to suit multiple latch families using A5 flat rods**

Standard Hole Detail

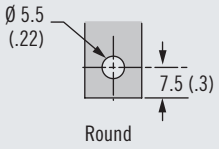

Others available upon request

Square

Lantern

Mid Roller
Rod Guide A5-F90-71

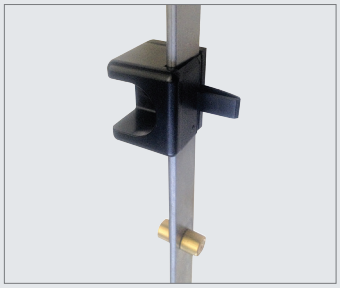

Rod Keeper A5-F80-69

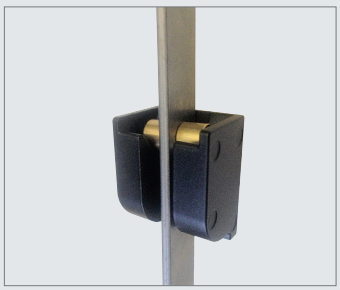

PUSH-TO-CLOSE LATCHES

Concealed Latches

Pages 240-249, 252, 254-255

Push-to-close latches simply slam closed, with no secondary steps required for latching. Concealed latches mount inside the enclosure to hide latch points for aesthetic or security reasons.

- Compact plastic latches provide economical solutions for small door applications
- Adjustable keeper brackets provide flexibility for accurate alignment
- Available in magnetic or mechanical latching

C3

02

MT

E2

E4

A4

Surface Mount Latches

Pages 250-251, 253, 256-285

Match the strength and cost requirements of your push-to-close latch application with a variety of actuation styles – including slide, push-to-open, or pull-handle styles. Surface mount styles provide both the actuation capability and a convenient handgrip for opening the door.

- Non-locking and locking styles available
- Variety of size, design, and convenient actuation options
- Snap-in installation styles reduce installed cost
- Numerous corrosion resistant designs

Push-to-Close Latches

Selection guide · Concealed

Use this selection guide to choose the right Push-to-Close Latches for your application

Multi-Point Capable

Padlockable

Stainless Steel

			MATERIAL		PERFORMANCE
		Product Class	Zinc Alloy and Steel	Plastic	Accommodates Misalignment
CONCEALED - PAGES 240-249, 252, 254-255		C3		✔	
		E2	✔	✔	✔
		A4	✔		✔
		E4		✔	
		02	✔	✔	✔
		MT		✔	

Dimensions in millimeters (inch) unless otherwise stated

INSTALLATION		OPENING ACTION		ACCESS STYLE	
Round Hole	Snap-In	Pull	Push	Internal Release	Multi-Point Capable
	✔	✔		✔	
			✔	✔	✔
			✔		
	✔		✔		
✔	✔	✔		✔	
		✔			

Push-to-Close Latches

Selection guide · Surface mount

Use this selection guide to choose the right Push-to-Close Latches for your application

Key-Locking Available

Key-Choice System

Multi-Point Capable

Stainless Steel

			MATERIAL			PERFORMANCE	
		Product Class	Stainless Steel	Zinc Alloy and Steel	Plastic	Maximum Working Load	Grip Range
VISIBLE - PAGES 250-251, 253, 256-285		M1	✔		✔	270 - 835 N	20 - 32
		MP	✔		✔	270 N	20 - 26
		M1			✔	310 N	27 - 35
		MP		✔	✔	15 N	35
		A3			✔	25 - 220 N	2.54 - 6.4
		93		✔	✔	330 - 560 N	20 - 25
		R3		✔		560 N	15
		R3		✔		560 N	16.5
		R4			✔	290 N	41.7
		M1			✔	135 - 500 N	6.4 - 24.8
		80			✔	90 N	6
		64	✔	✔		55 - 2700 N	1.2 - 37.9
		MT	✔			---	---
		M5	✔				

INSTALLATION			OPENING ACTION					ACCESS STYLE			
Round Hole Install	Flush / Low Profile	Snap-In	Lift	Turn	Slide	Pull	Push	Key-Locking	Key-Choice System	Internal Release	Multi-Point capable
✔	✔		✔					✔		✔	
✔	✔		✔					✔		✔	
✔	✔			✔		✔	✔				
	✔					✔	✔				
	✔	✔			✔			✔			
	✔			✔			✔	✔			
	✔		✔					✔	✔	✔	✔
	✔		✔					✔		✔	
	✔		✔					✔			
	✔		✔				✔	✔			
	✔	✔					✔				
	✔		✔					✔		✔	✔
✔						✔	✔			✔	
						✔					

C3 Push-to-Close Latch

Pull-to-open · Grabber catch · Snap-in

- **Spring-loaded over-center latching**
- **One assembly includes catch and keeper**

Material and Finish

Housing: PC/ABS or glass-filled nylon
Keeper: Mineral filled nylon

Performance Details

Operating temperature range: -30°C (-20°F) to 60°C (140°F)

Flammability rating: UL94-HB

Installation Notes

Max. tightening torque on mounting screws (not supplied)
Keeper: 2.8 N·m (24.8 in·lbf)

Orient **keeper** to latch. The arrow on the keeper should point towards the cam. Mount to door and adjust for smooth latching

Part Number

See table

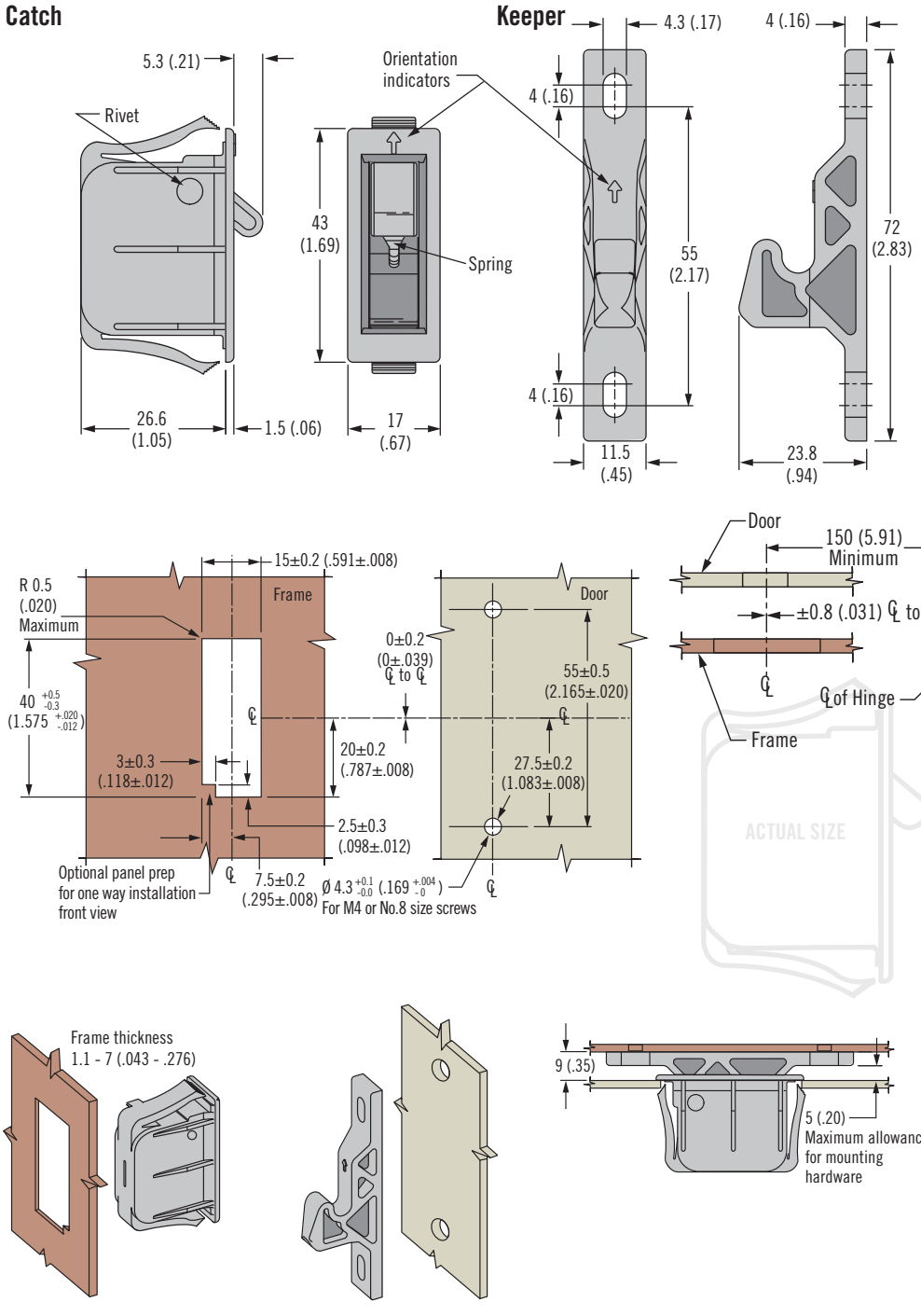

Approximate Pull-Up Force	Spring Color	Part Number		
		Frame Thickness Range		
		1.1 - 2.9 (.043 - .114)	2.9 - 5.3 (.114 - .209)	5.3 - 7 (.209 - .276)
13 N	Blue	C3-303	C3-503	C3-703
22 N	Silver	C3-305	C3-505	C3-705
44 N	Black	C3-310	C3-510	C3-710

Dimensions in millimeters (inch) unless otherwise stated

C3 Push-to-Close Latch

Pull-to-open · Grabber catch · Side mount

Catch

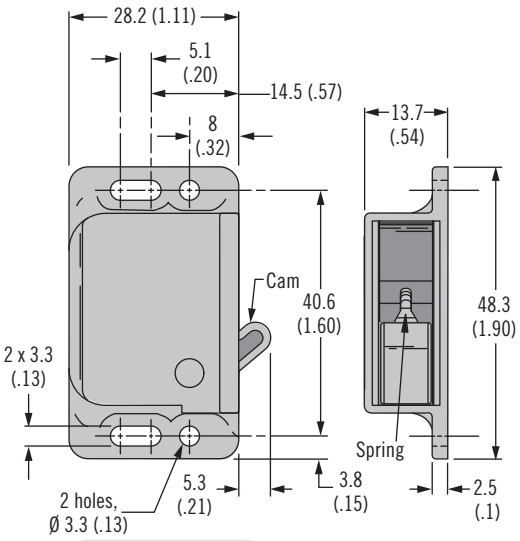

Keeper

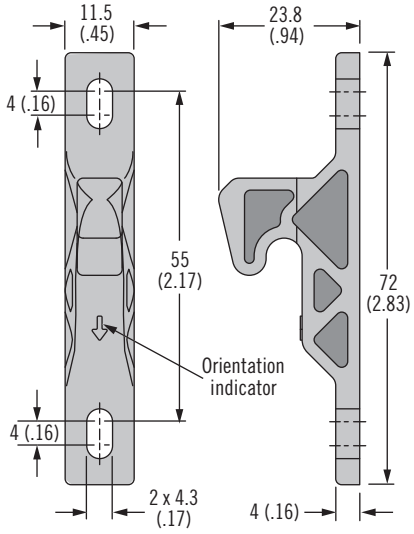

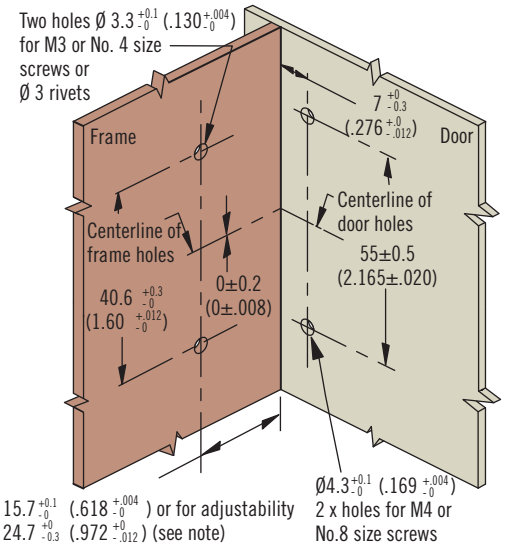

Note: These holes and dimensions are used only if adjustability through the use of slotted holes in catch is desired.

Right Side Installation Shown

Invert catch and keeper for left side installation

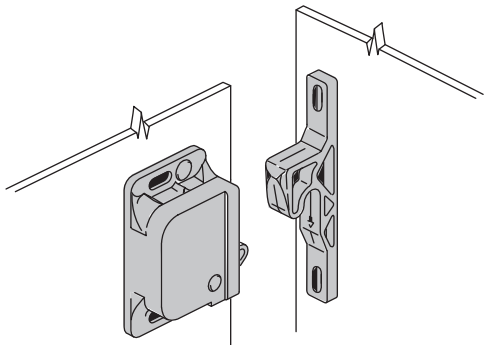

Approximate Pull-Up Force	Spring Colour	Part Number
13 N	Blue	C3-803
22 N	Silver	C3-805
44 N	Black	C3-810

- **Spring-loaded over-center latching**
- **One assembly includes catch and keeper**

Material and Finish

Housing: PC/ABS or glass-filled nylon
Keeper: Mineral filled nylon

Performance Details

Operating temperature range: -30°C (-20°F) to 60°C (140°F)

Flammability rating: UL94-HB

Installation Notes

Max. tightening torque on mounting screws: (not supplied)
Catch: 1.1 N·m (9.7in·lbf)
Keeper: 2.8 N·m (24.8in·lbf)

Orient **keeper** to latch. The arrow on the keeper should point towards the cam. Mount to door and adjust for smooth latching.

Min. distance from frame (or surface on which catch sub-assembly is mounted) to centerline of door hinge is 150 (5.9)

Part Number

See table

C3 Push-to-Close Latch

Pull-to-open · Grabber catch with integral Microswitch

- **Opens and closes switch contacts with door operation**
- **One assembly includes catch and keeper**
- **Spring loaded over-center latching**

Material and Finish

Housing: PC/ABS or glass-filled nylon
Keeper: Mineral filled nylon

Performance Details

Operating temperature range: -40°C (-40°F) to 60°C (140°F)

Flammability rating: UL94-V0

Installation Notes

Max. tightening torque on mounting screws (not supplied):
Catch 1.1 N·m (9.7 in·lbf)
Keeper 2.8 N·m (24.8 in·lbf)
Orient **keeper** to latch. The arrow on the keeper should point towards the cam. Mount to door and adjust for smooth latching.

Notes

This product is specifically designed to be used as a mechanical grabber catch with an electric switch. The switch is designed to operate an indicator light or form part of a non-safety related logic circuit. This is not designed for use as a safety interlock.
Terminal cover is used for protection during shipping only. Use strain relief on wires.

Min. distance from frame (or surface on which catch sub-assembly is mounted) to centerline of door hinge is 150 (5.9)

Part Number

See table

Catch

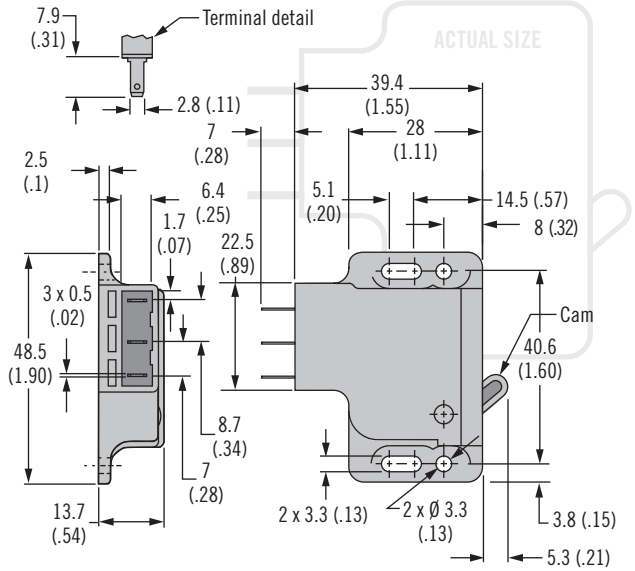

Keeper

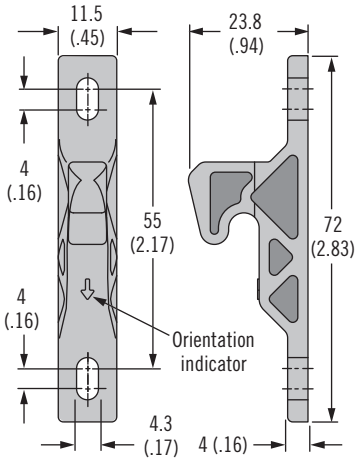

Switch specification. Subminiature VDE, UL approved. Switch is fitted with fast-on terminals. Max AC voltage 250V, max AC current 6A. See graph below for DC resistive load.

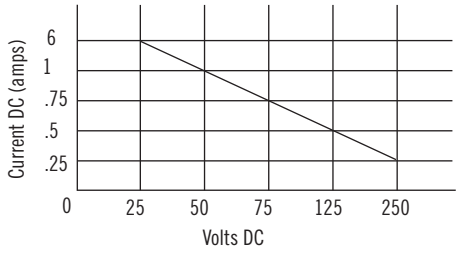

Over 50 V DC, inductive loads should be greatly reduced

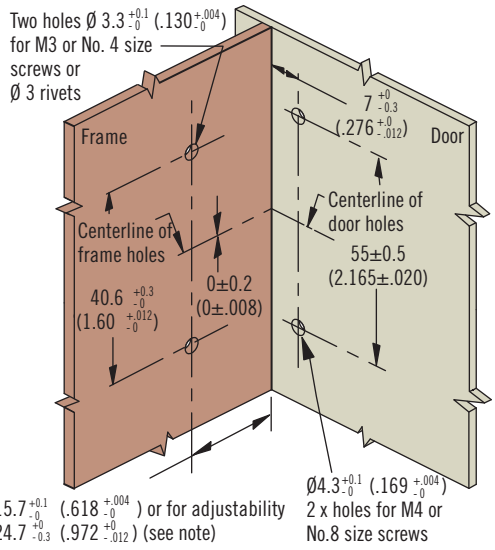

Right Side Installation Shown

Invert catch and keeper for left side installation

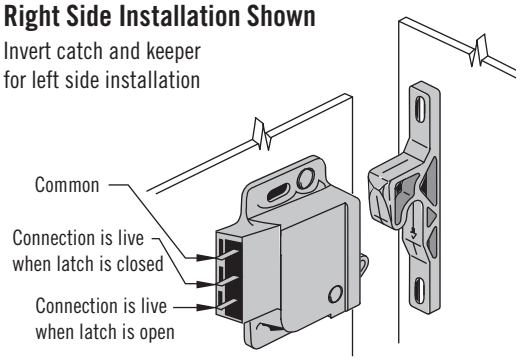

Note: These holes and dimensions are used only if adjustability through the use of slotted holes in catch is desired.

Approximate Pull-Up Force	Spring Colour	Part Number
13 N (3 lbf)	Blue	C3-1803
22 N (5 lbf)	Silver	C3-1805
44 N (10 lbf)	Black	C3-1810

Dimensions in millimeters (inch) unless otherwise stated

A4 Push-to-Close Latch

Push-to-open · Large

- **Heavy-duty construction**
- **Push-to-close, push-to-open**

Material and Finish

Steel, zinc plated

Housing Assembly

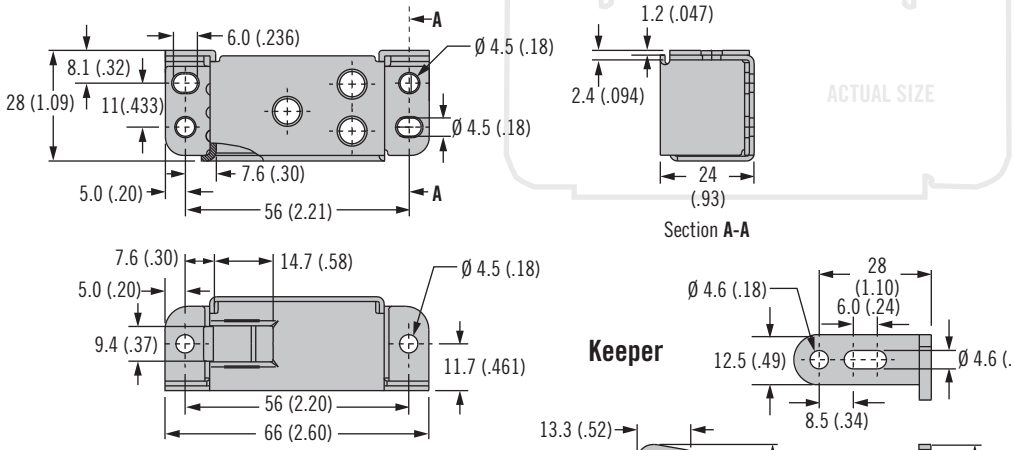

Keeper

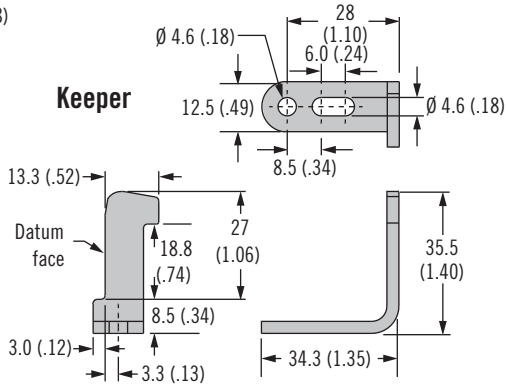

Description	Part Number
Latch	A4-30-201-12
Keeper	A4-36-201-12

www.southco.com/A4

A4 Push-to-Close Latch

Push-to-open · Small

- **Accommodates misalignment**
- **Push-to-close, push-to-open**

Material and Finish

Steel, zinc plated and thermoplastic, black

Pin Latch

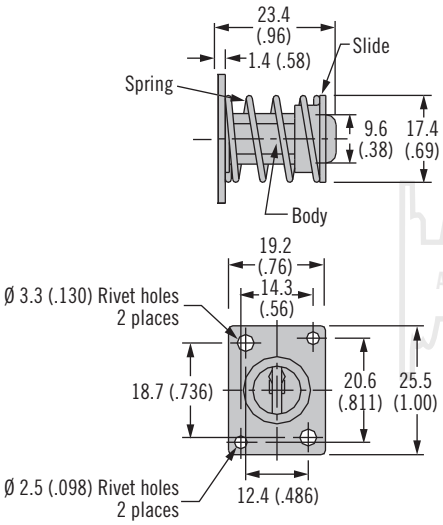

Optional Floating Receptacle

Notes: Floating part of receptacle faces pin latch

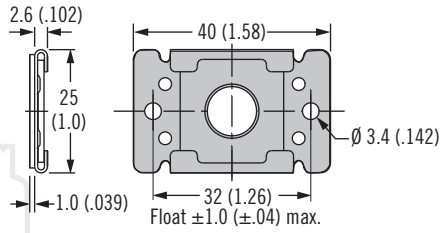

Part Number	
Pin latch	A4-20-501-10
Optional floating receptacle	A4-26-502-10

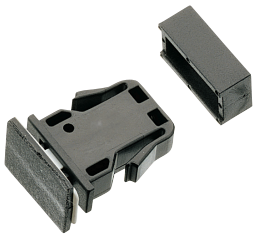

E4 Push-to-Close Latch

Push-to-open · Touch latch · Small

- **Concealed latch points**
- **Door ejection feature**
- **Snap-in installation**

Material and Finish

Latch and keeper: Acetal, black
Alignment guide: Acetal, white

Performance Details

Average tensile load: 15 N (3.5 lbf)

Operating temperature range: -40°C (-40°F) to 105°C (220°F)

Flammability rating: UL94-HB

Installation Notes

Be sure the mounting surface is clean and capable of retaining a satisfactory adhesive bond.

Self-adhesive keepers are designed to function under intermittent break-away loads

Part Number

See table

Latch

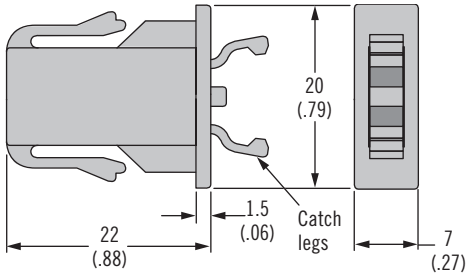

Keeper Assembly

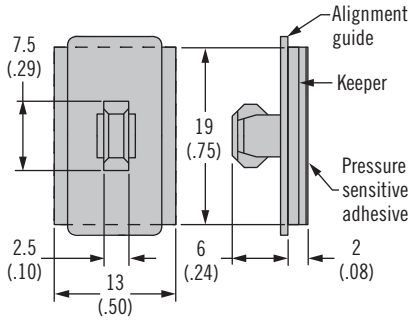

Spacer

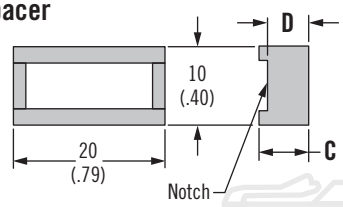

Unlatched

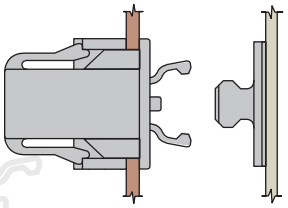

Latched

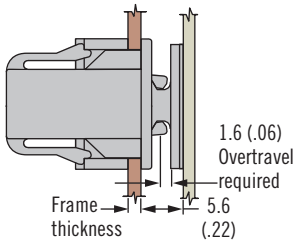

ACTUAL SIZE

Installation

1. Prepare frame. Snap latch into place.

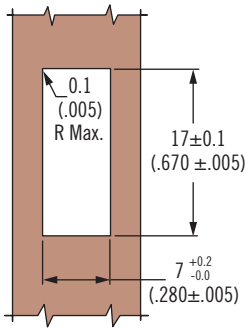

2. Install spacer (If required).

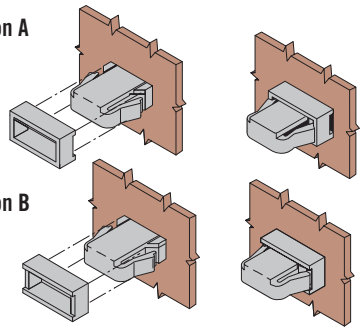

3. With alignment guide in place, engage keeper with latch. (If catch legs are retracted, push them into the latch housing to release before proceeding).

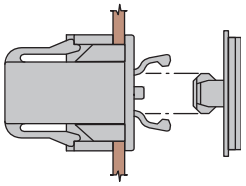

4. Peel protective backing from keeper. Close door against adhesive.

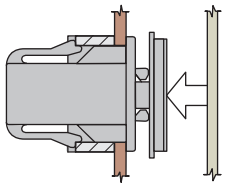

5. Remove alignment guide from keeper and discard.

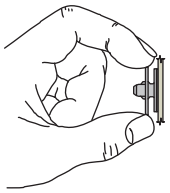

Frame Thickness		Part Number	Spacer Position Installed	Spacer Thickness		Spacer Colour
Min.	Max.			C	D	
0.8 (.030)	1 (.040)	E4-10-102-10	A	7.5 (.295)	6.9 (.270)	Black
1.4 (.055)	1.7 (.065)		B			
1.8 (.070)	2 (.080)	E4-10-103-10	A	6.5 (.255)	5.3 (.210)	Natural
2.9 (.115)	3.2 (.125)		B			
4.6 (.182)	4.9 (.192)	E4-10-104-10	A	3.6 (.143)	2 (.080)	Grey
6.2 (.245)	6.5 (.255)		B			
8.1 (.320)	8.6 (.340)	E4-10-101-10	Spacer not required			

Dimensions in millimeters (inch) unless otherwise stated

E4 Push-to-Close Latch

Push-to-open · Touch latch · Large

Latch

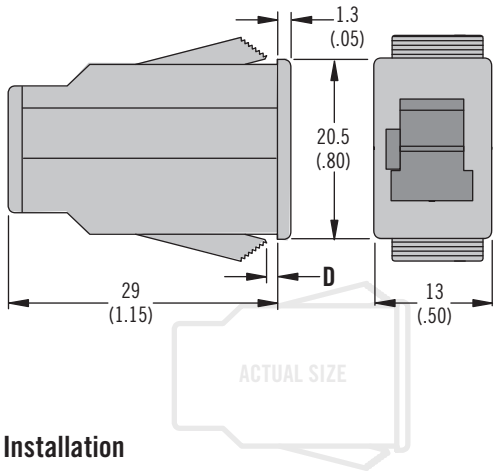

Keeper Assembly

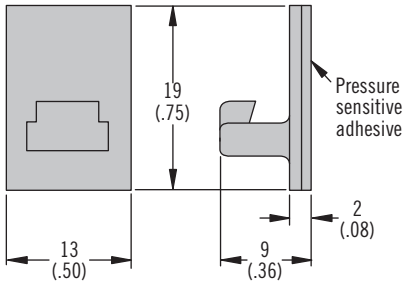

Installation

1. Prepare frame

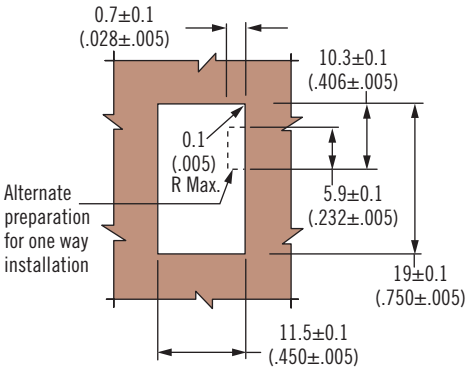

2. Snap latch into place

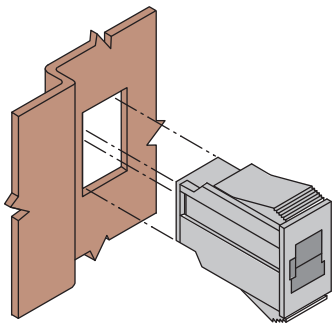

3. Re-engage keeper with latch

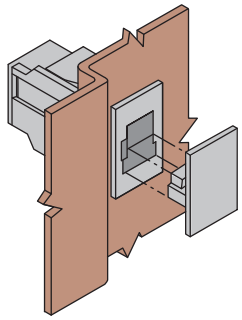

4. Peel protective backing from keeper
Close door against adhesive

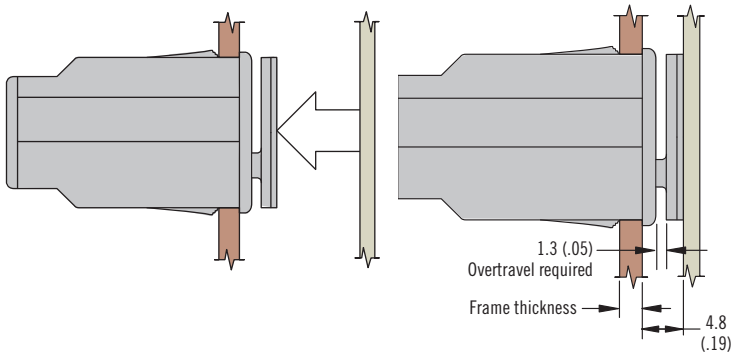

Frame Thickness		D	Part Number
Min.	Max.		
1 (.04)	3 (.12)	0.9 (.035)	E4-10-201-10
3 (.12)	5 (.20)	2.9 (.115)	E4-10-202-10
5 (.20)	7 (.28)	4.9 (.196)	E4-10-203-10

- **Concealed latch points**
- **Door ejection feature**
- **Snap-in installation**

Material and Finish

Latch and keeper: Acetal, black and thermoplastic polyester, black

Performance Details

Average tensile load:
Self-adhesive keeper: 50 N (11 lbf)
Integrally moulded keeper:
120 N (27 lbf)

Operating temperature range:
-40°C (-40°F) to 105°C (220°F)

Flammability rating: UL94-HB

Installation Notes

Be sure the mounting surface is clean and capable of retaining a satisfactory adhesive bond. Keeper can be moulded into application door

Self-adhesive keepers are designed to function under intermittent break-away loads

Part Number

See table

02 Push-to-Close Latch

Pull-to-open · Magnetic catch · Snap-in

- **Snap-in installation**
- **Optional side mount bracket**

Material and Finish

Housing:
Pole pieces and mounting bracket:
Steel, zinc plated

Small, large: Barium ferrite
Medium: Strontium ferrite

Performance Details

Size	Average breakaway force
Small 300 series	8 N (1.8 lbf)
Medium 100 series	46 N (10 lbf)
Large 200 series	64 N (14 lbf)
Double magnet 800 series	105 N (23 lbf)

Operating temperature range:
-30°C (-20°F) to 115°C (240°F)
Flammability rating
UL94-HB

Installation Notes

For non-ferrous applications. Screw-mounted and adhesive backed strikes are available. Order separately. See page 249.

Notes

Performance values shown are supplied as a general guide only.

Part Number

See table

Small

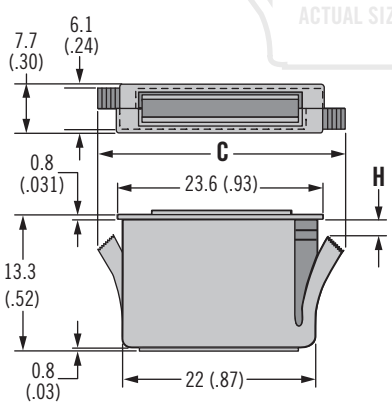

Medium

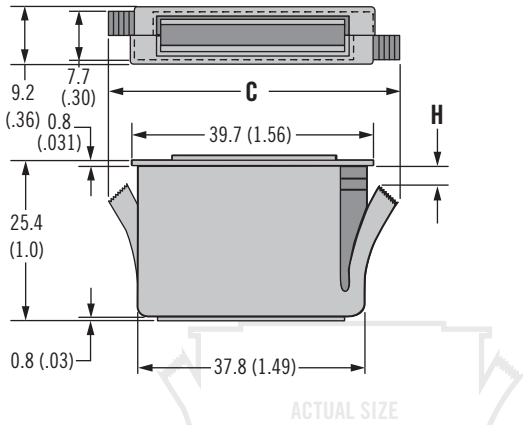

Large

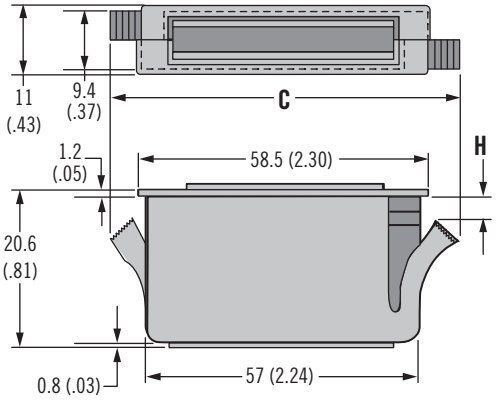

Large double magnet

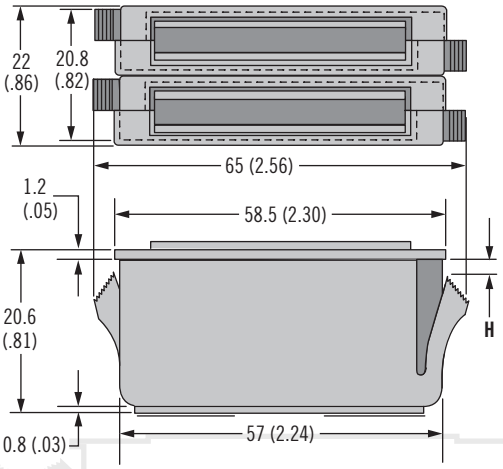

Size	C	H	Frame Thickness		Magnet Part Number	
			Min.	Max.	Black	White
Small	27.9 (1.10)	0.9 (.035)	0.5 (.020)	2 (.080)	02-10-301-10	02-10-301-20
	26.7 (1.05)	2.4 (.095)	2 (.080)	3.6 (.140)	02-10-302-10	02-10-302-20
Medium	47 (1.85)	1 (.040)	0.5 (.020)	2 (.080)	02-10-101-10	02-10-101-20
	46.2 (1.82)	2.5 (.100)	2 (.080)	3.6 (.140)	02-10-102-10	02-10-102-20
	45.5 (1.79)	4 (.160)	3.6 (.140)	5.1 (.200)	02-10-103-10	02-10-103-20
Large	65.3 (2.57)	0.3 (.010)	0.5 (.020)	2 (.080)	02-10-201-10	02-10-201-20
	64.5 (2.54)	1.8 (.070)	2 (.080)	3.6 (.140)	02-10-202-10	02-10-202-20
	63.3 (2.49)	3.3 (.130)	3.6 (.140)	5.1 (.200)	02-10-203-10	02-10-203-20
Large double magnet	~	0.3 (.010)	0.5 (.020)	2 (.080)	02-10-801-10	~
	~	1.8 (.070)	2 (.080)	3.6 (.140)	02-10-802-10	~
	~	3.3 (.130)	3.6 (.140)	5.1 (.200)	02-10-803-10	~

Dimensions in millimeters (inch) unless otherwise stated

Installation

1. Punch rectangular slot

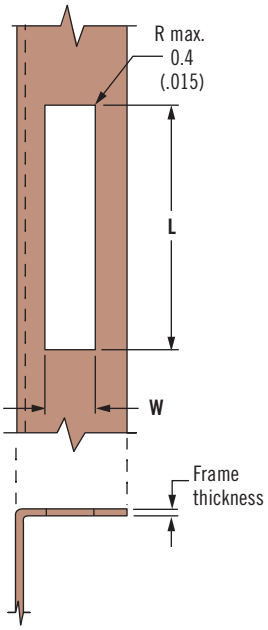

2. Snap catch into slot

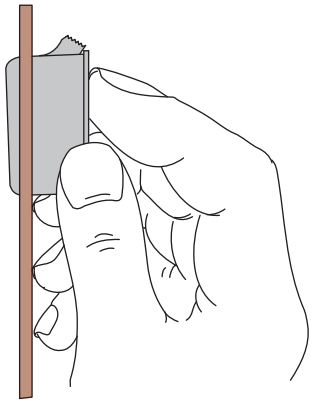

- **Snap-in installation**
- **Optional side mount bracket**

Installation Notes

Size	**L** ±0.1	**W** ±0.1
Small	22.2 (.875)	6.4 (.25)
Medium	38.1 (1.50)	8.1 (.32)
Large	57.1 (2.25)	9.6 (.38)
Double magnet	57.1 (2.25)	21 (.828)

Mounting Bracket

For applications where frame is not suitable for punching (order separately)

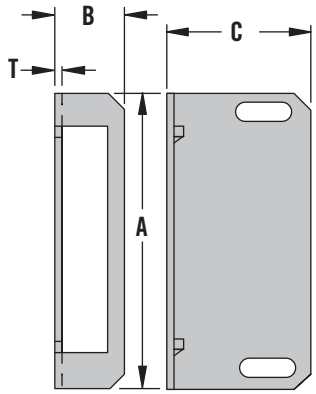

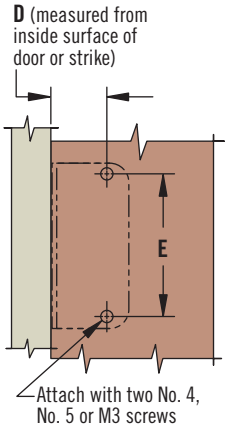

Size	A	B	C	D	E ±0.1	T	For Use with these Magnets ONLY	Bracket Part Number
Small	41.3 (1.63)	11.1 (.44)	13.5 (.53)	7.9±2.4 (.31±.09)	35 (1.38)	1 (.042)	02-10-301-10 02-10-301-20	02-16-301-11
Medium	51 (2.00)	12.7 (.50)	24.6 (.97)	17.5±3.2 (.69±.13)	44.5 (1.75)		02-10-101-10 02-10-101-20	02-16-101-11
Large	76 (3.00)	14.3 (.56)	18.7 (.73)	12.7±3.2 (.50±.13)	70 (2.75)		02-10-201-10 02-10-201-20	02-16-201-11
Large double magnet	76 (3.00)	25.4 (1.00)	18.7 (.73)	12.7±3.2 (.50±.13)	70 (2.75)	1.6 (.062)	02-10-801-10	02-16-801-11

Part Number

See table

02 Push-to-Close Latch

Pull-to-open · Magnetic catch · Snap-in

- **Round hole**
- **Snap-in installation**
- **Adhesive installation**
- **Optional side mount bracket**

Material and Finish

Housing: Polypropylene, black
Pole pieces: Steel, zinc plated
Magnet: Barium ferrite

Performance Details

Size	Average breakaway force
100 series	46 N (10 lbf)
200 series	64 N (14 lbf)
300 series	8 N (1.8 lbf)
400 series	18.5 N (4.2 lbf)
600 series	49 N (11 lbf)

Operating temperature range:
-30°C (-20°F) to 115°C (240°F)
Flammability rating: UL94-HB

Installation Notes

For non-ferrous applications. Screw-mounted and adhesive backed strikes are available. Order separately. See page 249.

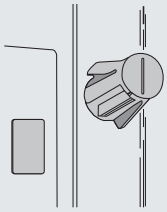

Notes

Performance values shown are supplied as a general guide only

Part Number

See table

Series 100 - Part Number 02-30-121-10

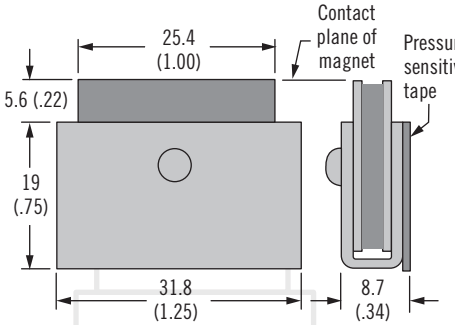

Series 200 - Part Number 02-30-221-10

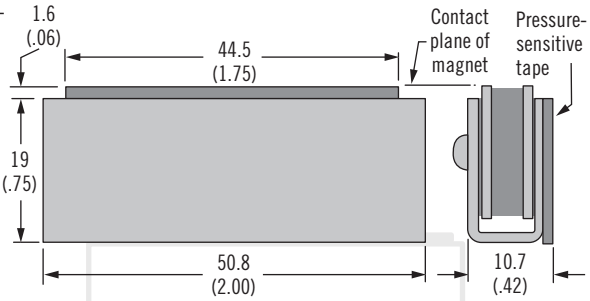

Small - 400 Series

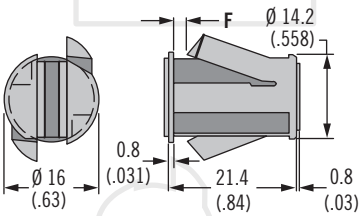

Large - 600 Series

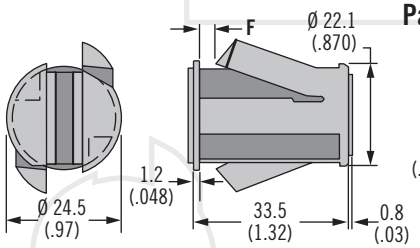

Series 300 - Part Number 02-30-321-10

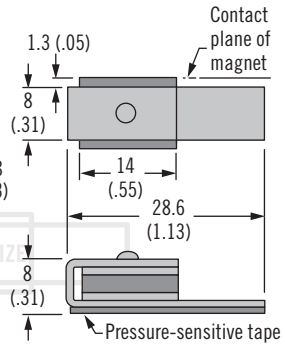

Installation

1. Drill or punch hole

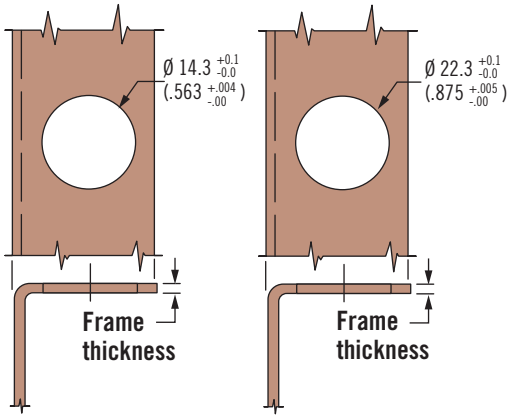

2. Snap catch into hole

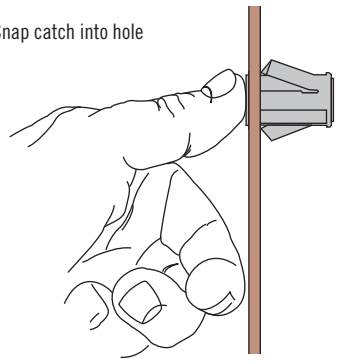

Installation

1. Remove protective paper

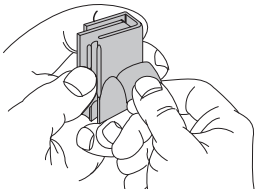

Notes: Be sure the mounting surface is clean and capable of retaining a satisfactory adhesive bond

2. Place in position

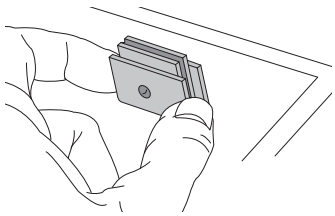

Size	ØD	F	Frame Thickness		Magnet Part Number
			Minimum	Maximum	
Small	Ø 14.3 +0.1 -0.0 (.563 +.004 -0.0)	0.8 (.030)	0.5 (.020)	2 (.080)	02-20-411-10
		2.3 (.090)	2 (.080)	3.5 (.140)	02-20-412-10
		3.8 (.150)	3.5 (.140)	5 (.200)	02-20-413-10
Large	Ø 22.3 +0.1 -0.0 (.875 +.005 -0.0)	0.5 (.020)	0.5 (.020)	2 (.080)	02-20-611-10
		2 (.080)	2 (.080)	3.5 (.140)	02-20-612-10
		3.5 (.140)	3.5 (.140)	5 (.200)	02-20-613-10

Dimensions in millimeters (inch) unless otherwise stated

Self-adhesive

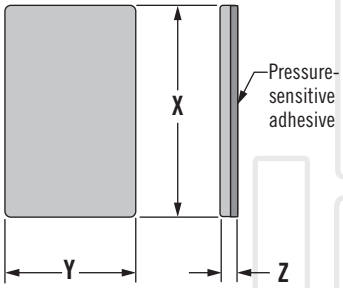

For Use with Series Catch	Strike Part Number	X	Y	Z
300	02-14-301-14	24 (.94)	8 (.31)	2 (.08)
400				
100	02-14-101-14	32 (1.25)	19 (.75)	2.4 (.094)
600				
200	02-14-201-14	51 (2.00)	19 (.75)	2.4 (.094)
800				

Installation

1. Position strike on installed catch

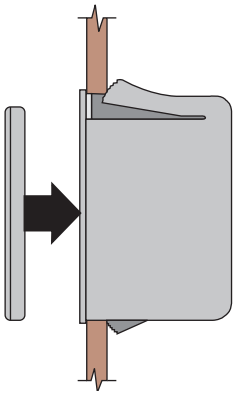

2. Remove protective paper. Close door or panel onto strike

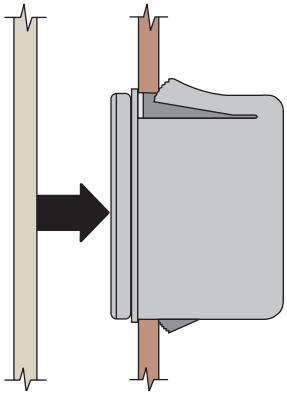

Screw-Mounted

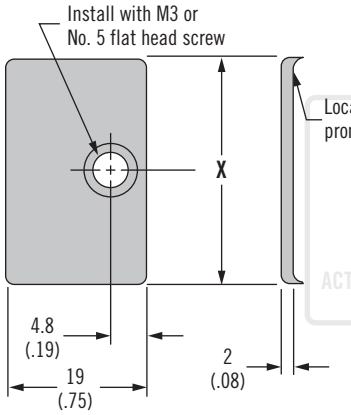

For Use With Series Catch	Strike Part Number	X
100	02-14-102-11	32 (1.25)
600		
200	02-14-202-11	51 (2.00)
800		

- **Ferrous keepers for magnet catch**
- **Self-adhesive or screw mount**

Material and Finish

Steel, zinc plated
Adhesive:
Neoprene foam with acrylic

Installation Notes

Be sure the mounting surface is clean and capable of retaining a satisfactory adhesive bond. Self-adhesive mounted strikes are designed to function under intermittent break-away loads. Use screw-mounted strikes for continuous load applications.

Part Number

See table

M5 Push-to-Close Latch

Pull-to-open – Magnetic Catch

- **316 Stainless Steel**
- **Range of holding powers**
- **Adjustable swivel catch**

Material and Finish

Catches: 316 Stainless Steel
Magnet: NdFeB
Rubber Bumper: Buna, Black
Screws: 304 Stainless Steel

Flush Style Fixed Catch

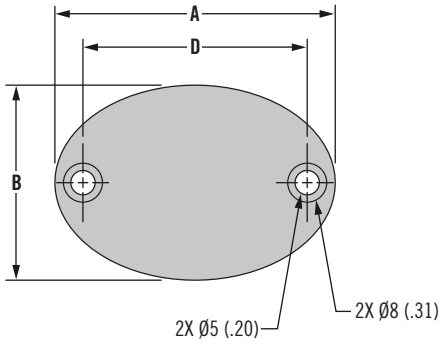

Proud Style Fixed Catch

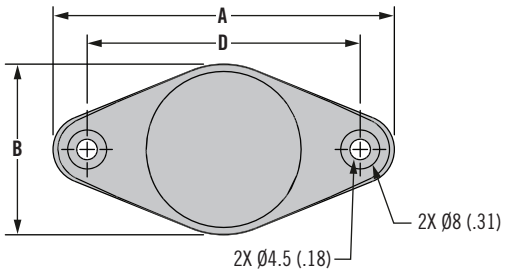

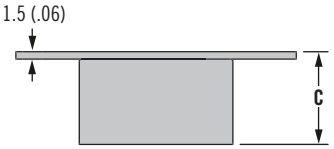

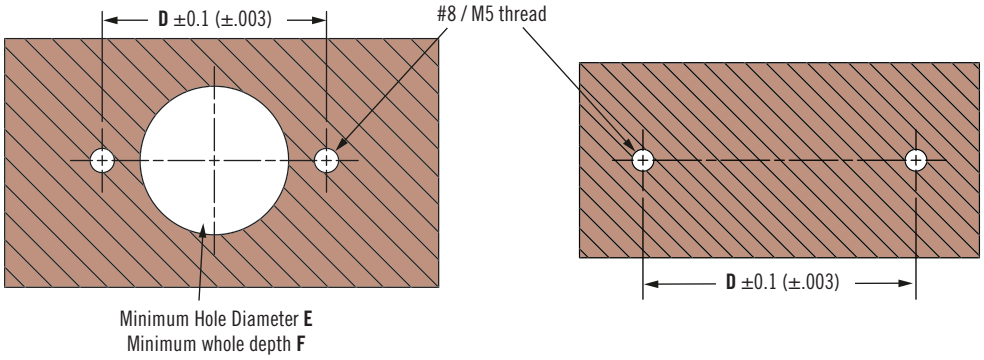

Fixed Catches

Part Number	Style	Strength	A	B	C	D	E	F
M5-7 M -41-8	Flush	Low	57.5 (2.26)	40 (1.57)	14 (.55)	46 (1.81)	21.5 (.85)	13.5 (.53)
M5-7 M -61-8		High	57.5 (2.26)	40 (1.57)	19 (.75)	46 (1.81)	31.5 (1.24)	18.5 (.73)
M5-7 M -42-8	Proud	Low	46.5 (1.83)	27 (1.06)	15.2 (.60)	34 (1.34)		
M5-7 M -62-8		High	70 (2.76)	35 (1.38)	19 (.75)	56 (2.20)		

M - Magnetic Polarity
N = Negative
P = Positive

How to order:

A complete set consists of a positive fixed catch and a negative fixed or swivel catch. Select catches to meet the needs for mounting style and strength.

Step 1
Select catch strengths.

Magnetic strength of combined catch guidelines		
Nominal Hold	Catch 1 Strength	Catch 2 Strength
50 N (11 lb.)	Low	Low
69 N (15 lb.)	Low	High
118 N (26 lb.)	High	High

Step 2
Select a negative catch style to fit your application.

Options:
Fixed Flush or Proud
Swivel Low Profile or Adjustable Height
Use "**N**" in 4th character of part number.

Step 3
Select a positive catch style to fit your application.

Options:
Fixed Flush or Proud
Use "**P**" in 4th character of part number.

Dimensions in millimeters (inch) unless otherwise stated

M5 Push-to-Close Latch

Pull-to-open – Magnetic Catch

Low Profile Swivel Catch

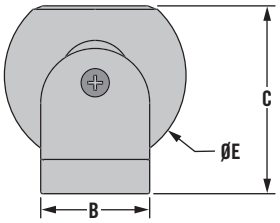

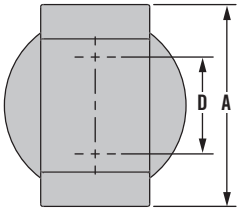

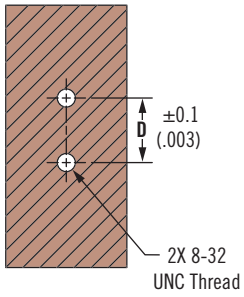

Adjustable Height Swivel Catch

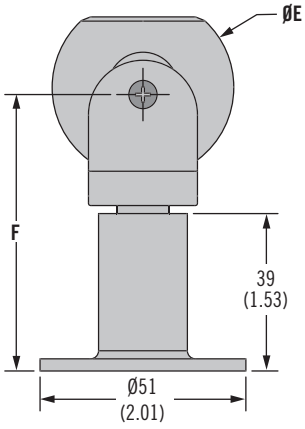

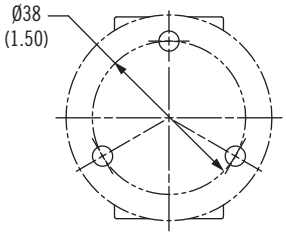

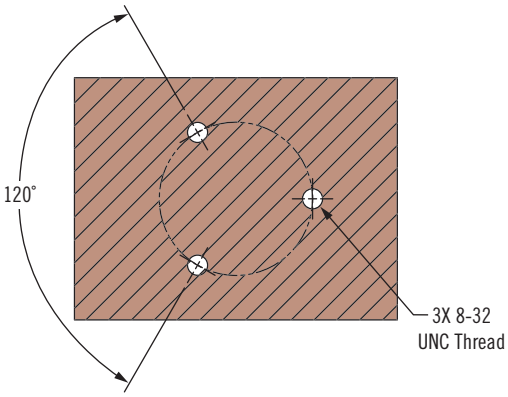

Low Profile Swivel Catch

Part Number	Strength	A	B	C	D	E
M5-7N-43-8	Low	37 (1.46)	18.5 (.73)	32 (1.26)	16 (.63)	Ø32 (1.26)
M5-7N-63-8	High	50 (1.97)	27 (1.06)	46.7 (1.84)	24 (.94)	Ø45 (1.77)

Adjustable Height Swivel Catch

Part Number	Strength	E	F Min	F Max
M5-7N-44-8	Low	Ø32 (1.26)	60 (2.36)	89 (3.50)
M5-7N-45-8	Low	Ø32 (1.26)	75 (2.95)	101 (3.98)
M5-7N-65-8	High	Ø45 (1.77)	68.5 (2.70)	95 (3.74)

MT Push-to-Close Latch

Pull-to-open · Cabinet catches

- **Ergonomic design**
- **Dampening pad to eliminate door slam**

Material and Finish

Latch: Acetal, black
Keeper: Steel, zinc plated

Part Number

See table

Latch and keeper supplied

Latch

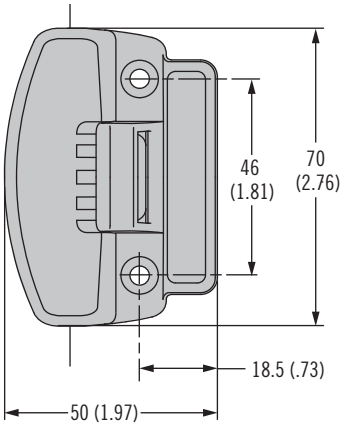

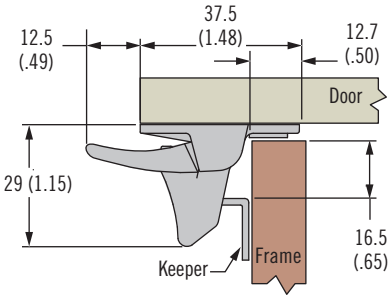

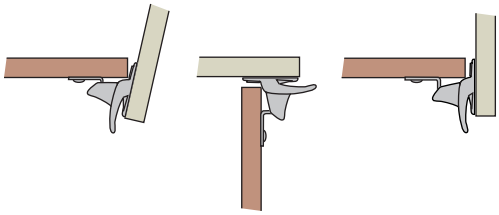

Colour	Part Number
Black	MT-02-10-5

Dimensions in millimeters (inch) unless otherwise stated

MT Push-to-Close Latch

Pull-to-open · Padlockable

- **Remote actuation**
- **Corrosion-resistant**

Material and Finish

Latch and keeper:
Stainless steel, passivated

Part Number

See table

Latch and keeper supplied

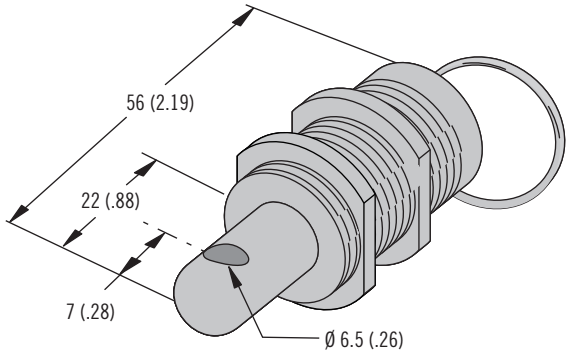

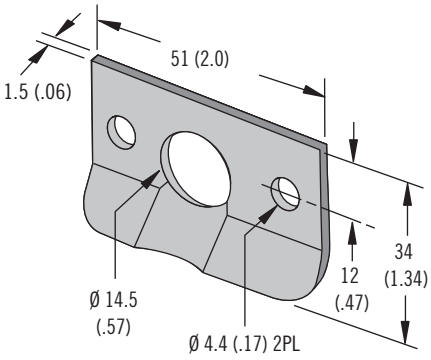

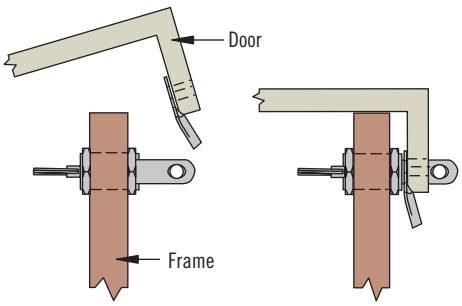

Part Number
MT-04-11-24

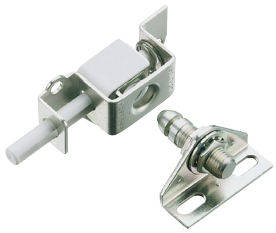

E2 Push-to-Close Latch

Push-button to open · Hidden panel latching system

- Concealed latch points
- Door ejection feature
- Accommodates misalignment
- Single or two point latching

Material and Finish

Steel, zinc plated and thermoplastic, white, aluminium, natural

Performance Details

Keeper style	Static load	Ultimate load
Fixed	1300 N (300 lbf)	2200 N (500 lbf)
Floating	750 N (170 lbf)	1400 N (310 lbf)

Operating temperature range: -18°C (-0°F) to 120°C (250°F)

Flammability rating: UL94-V0

Installation Notes

See www.southco.com/e2

*Nominal keeper location from inside surface of door. Adjustable 6.4 (.25) either way to allow for variations in mounting, gasketing, etc

Part Number

See table

Available in Two Versions - Near Edge and Remote

Near Edge

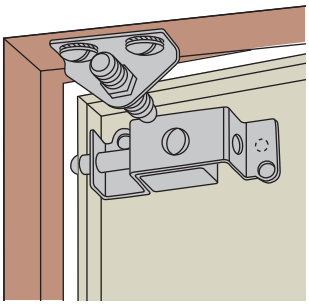

Remote

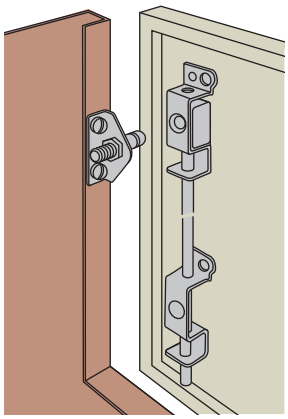

1. Select Keeper

Floating Keeper for Hinged Panels

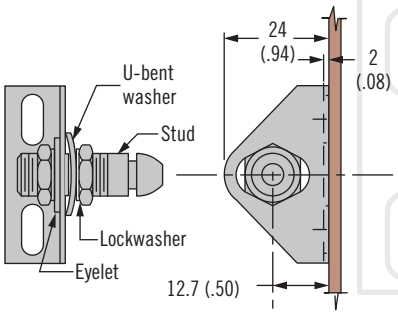

Fixed Keeper for Lift-Off Panels

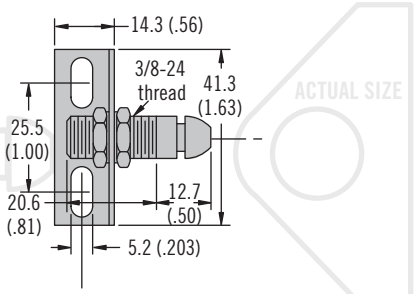

2. Determine Latch Location - Near Edge or Remote (Single or Two Point)

Near Edge

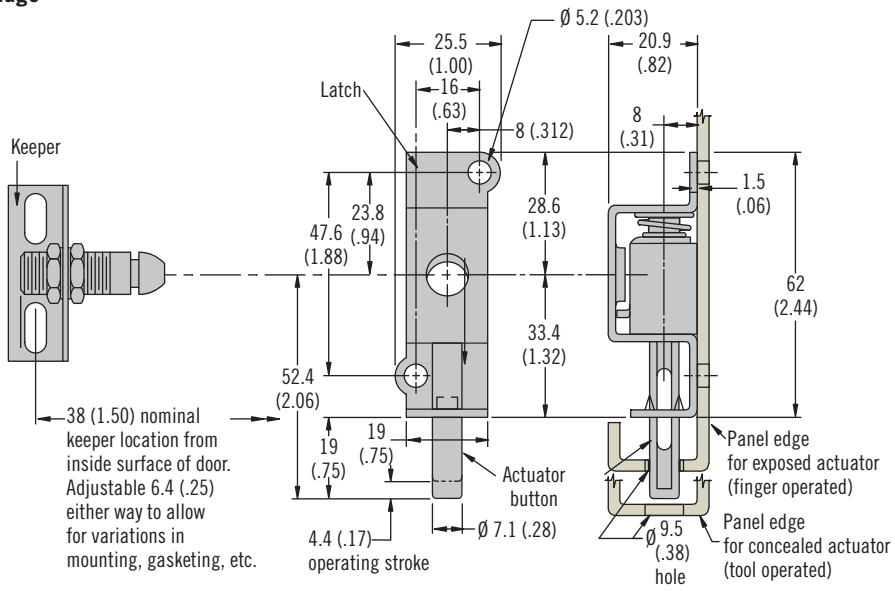

Near Edge Complete Assembly Part Number	
With Fixed Keeper	With Floating Keeper
E2-50-101-10	E2-50-101-20

A complete near edge assembly comes with keeper

Dimensions in millimeters (inch) unless otherwise stated

Remote - Single Point

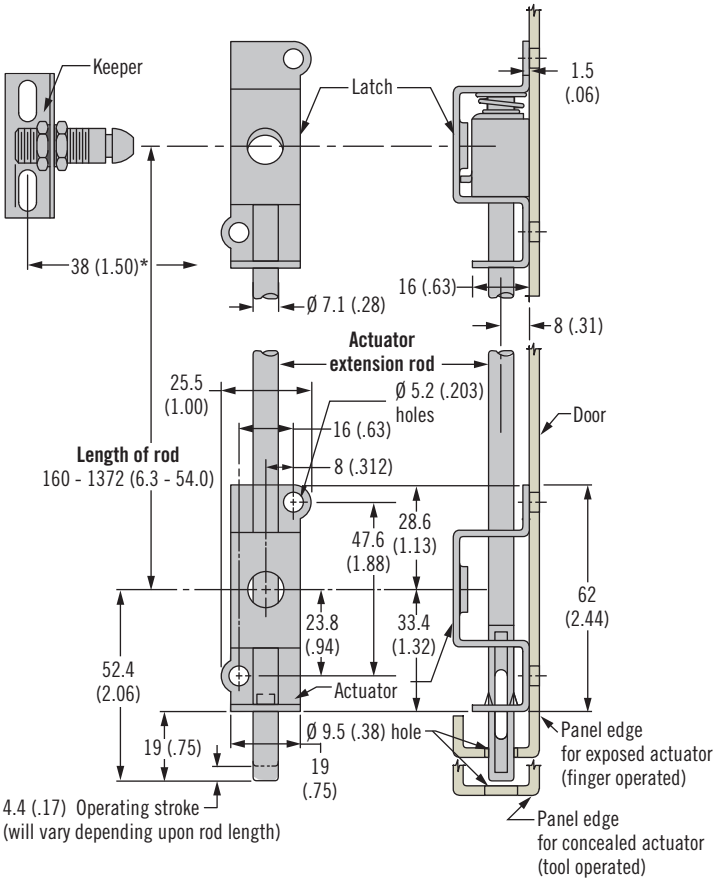

Remote - Two Point

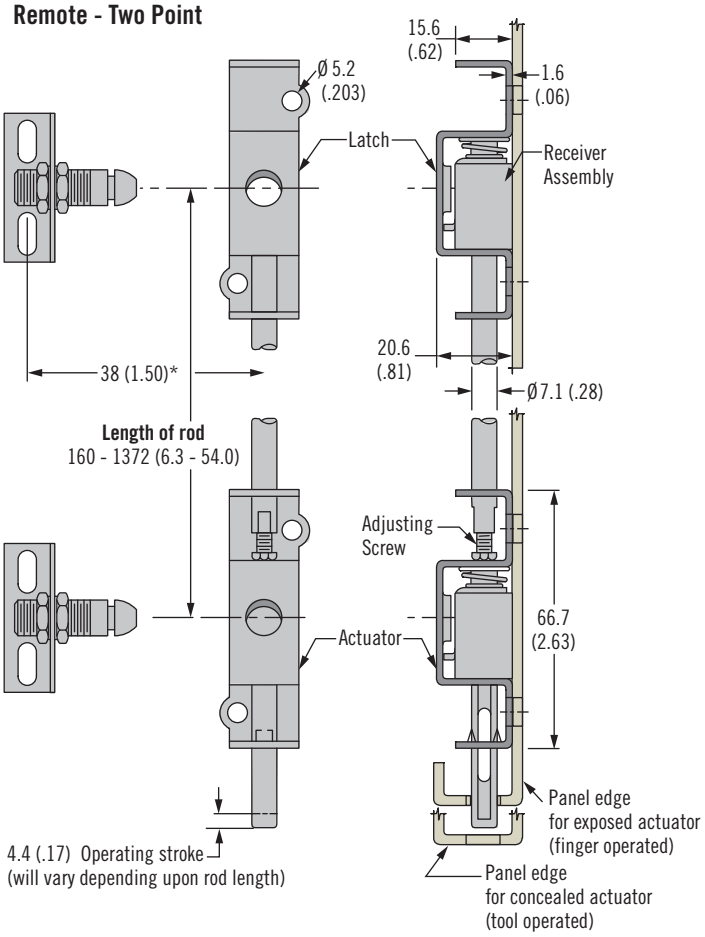

Remote Single Point Part Number	
Fixed keeper	E2-55-101-10
Floating keeper	E2-55-102-10
Rod 500 mm	E2-46-0500-16
Rod 1250 mm	E2-46-1250-16
Latch	E2-92-101
Actuator	E2-91-101

A complete remote single point assembly consists of 4 components: keeper, rod, latch and actuator

To order rod lengths other than the standard lengths, use part number:
E2-42-XXX-16
(XXX = length in mm)
Min. = 160 mm
Max. = 1372 mm
Min. order = 50 units

Remote Two Point Part Number	
Fixed keeper	E2-55-101-10
Floating keeper	E2-55-102-10
Rod 500 mm	E2-42-0500-16
Rod 1250 mm	E5-42-1250-16
Latch	E2-92-102
Actuator	E2-93-102

A complete remote two point assembly consists of 6 components: keeper (quantity 2), latch (quantity 2), rod and actuator.

* Adjustment formula is length of rod minus 30mm

M1 Push-to-Close Latch

38mm (1.5") · Stainless steel

- **Single, round-hole installation**
- **Locking style restricts access**
- **Premium finish and corrosion resistance**
- **Privacy lock on locking version**

Material and Finish

Latch: 316 grade stainless steel, bright polished
Spacer: Nylon, black
Contact Southco for other finishes

Performance Details

Max. static load: 545 N (122 lbf)

Accessories

One key supplied per latch for additional keys order M7-88-9121324-S

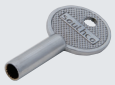

Spacer: M1-510-96-1

Keeper: M1-510-19-8

Mounting screws: M1-510-96-4

Installation Notes

Use the reference table to determine if a spacer is required for the door thickness and the correct mounting bracket orientation. The spacer shown is in the forward position.

Part Number Selection

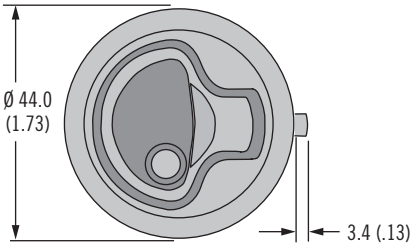

Non-locking

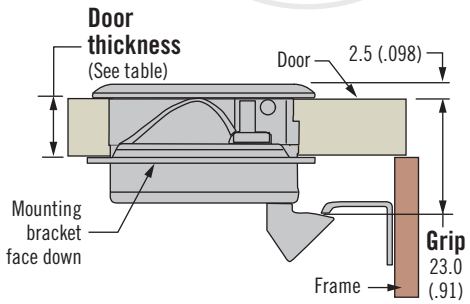

Locking

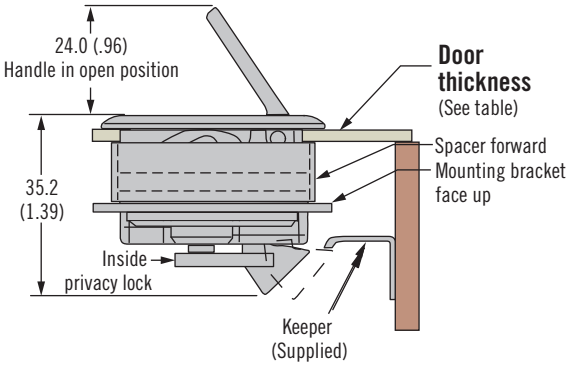

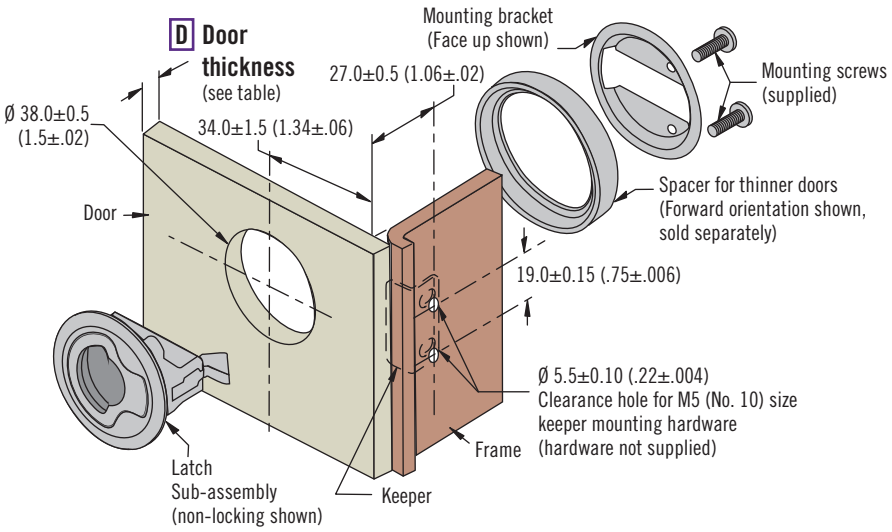

D Door Thickness	Spacer Orientation	Mounting Bracket Orientation
1.0 - 7.0 (.04 - .28)	Forward	Face Up
7.0 - 13.0 (.28 - .51)	(not required)	Face Up
13.0 - 19.0 (.51 - .75)	(not required)	Face Down

L **Lock style**
4 Locking (one tubular key supplied)
6 Non-locking

M1 - 15 - L 1 - 8

Dimensions in millimeters (inch) unless otherwise stated

M1 Push-to-Close Latch

50mm (2") · Stainless steel ·Plastic

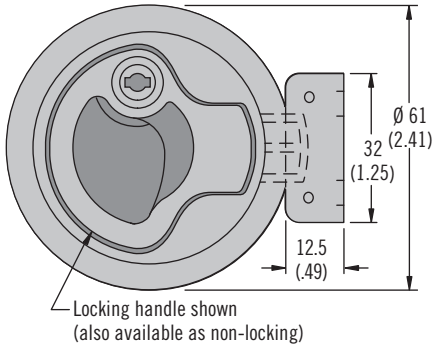

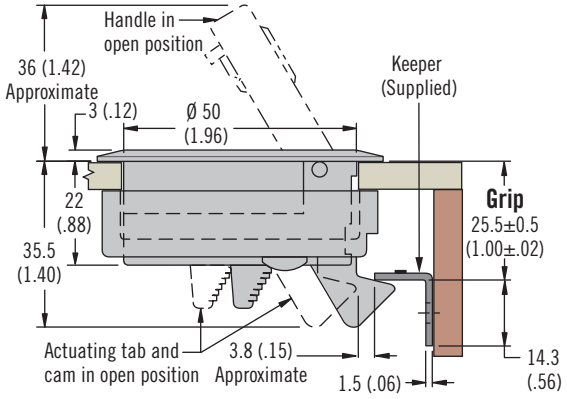

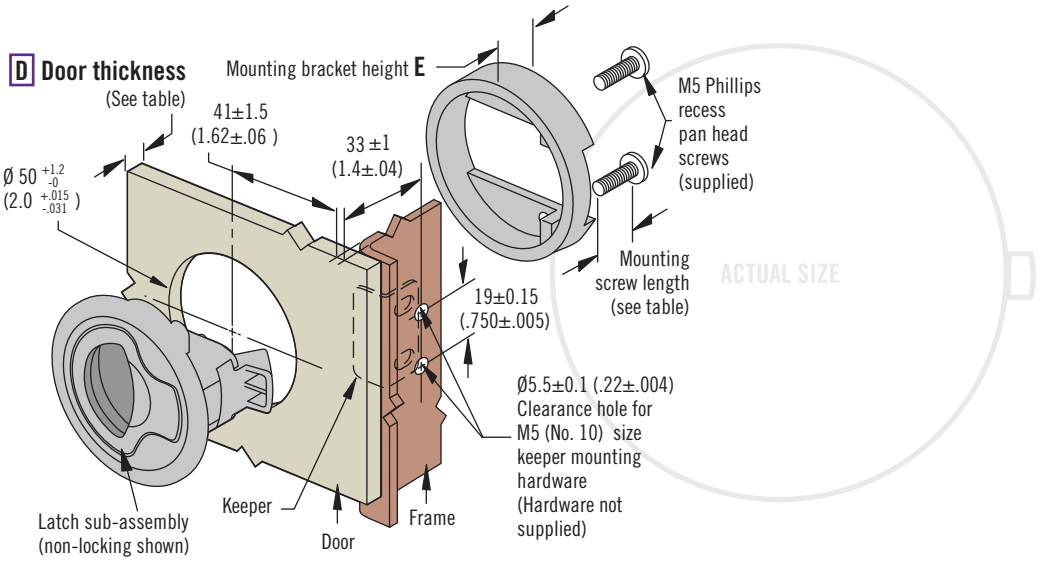

D Door Thickness		Mounting Bracket Height E	Mounting Screw Length	Replacement Screw Part Number
Min.	Max.			
2 (.075)	7 (.275)	14 (.55)	16 (.63)	M1-0-27358-01
7 (.275)	12 (.475)	14 (.55)	20 (.81)	M1-0-27358-02
12 (.475)	17 (.675)	3.8 (.15)	16 (.63)	M1-0-27358-01
17 (.675)	22 (.875)	3.8 (.15)	20 (.81)	M1-0-27358-02

D Door thickness
- **1** 2 - 7 (.075 - .275)
- **2** 7 - 12 (.275 - .475)
- **3** 12 - 17 (.475 - .675)
- **4** 17 - 22 (.675 - .875)

M1 - L D - F

F Finish
- **1** White Thermoplastic
- **7** Beige Thermoplastic
- **8** Stainless steel (omit for black)

L Lock style
- **4** Locking (2 keys supplied)
- **6** Non-locking
- **7** Key-locking keyed alike S008 (2 overmoulded keys supplied) (Only available for stainless steel version)

- **Single, round-hole installation**
- **Corrosion-resistant materials**
- **Inside actuation when locked or unlocked**

Material and Finish

Stainless steel 316 grade, electropolished or PC/PBT blend, black, white or beige

Performance Details

Max. Working load:
Stainless Steel: 835 N (187 lbf)
PC/ABT blend 270 N (60 lbf)

Operating temperature range:
-18 ºC (0 ºF) to 60 ºC (140 ºF)

Flammability rating:
UL94-HB (plastic version)

Installation Notes

Max. tightening torque on mounting screws: 1.7 N·m (15 in·lbf)

Accessories

Keeper
Part number: M1-519-4

For lock style 4
Key (pair)
Part number: M1-546

For lock style 7
Overmoulded key S008 (pair)
Part number:
M1-525-39-S008

Part Number Selection

See page 102 for complimentary styled compression version

M1 Push-to-Close Latch

64mm (2.5”) size · Stainless steel

- **Single, round-hole installation**
- **Corrosion-resistant materials**
- **Inside actuation when locked or unlocked**

Material and Finish

Stainless steel 316 grade, electropolished

Performance Details

Max. working load: 835 N (187 lbf)

Operating temperature range: -18°C (0°F) to 60°C (140°F)

Installation Notes

Max. tightening torque on mounting screws: 1.7 N·m (15 in·lbf)

Accessories

Keeper
Part number: M1-525-19-4

For lock style 4
Key (pair)
Part number: M1-546

For lock style 7
Overmoulded key S008 (pair)
Part number: M1-525-39-S008

Replacement mounting screw
Part number: M1-0-27358-02

Part Number Selection

See page 103 for complimentary styled compression version

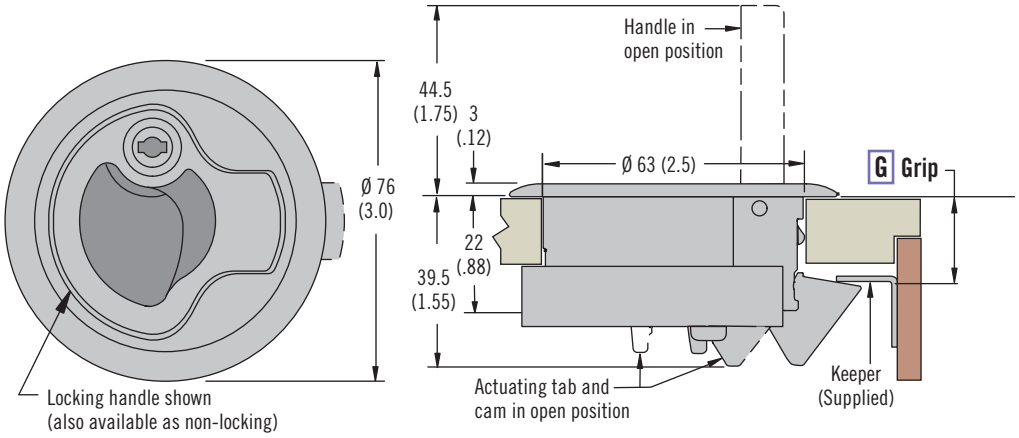

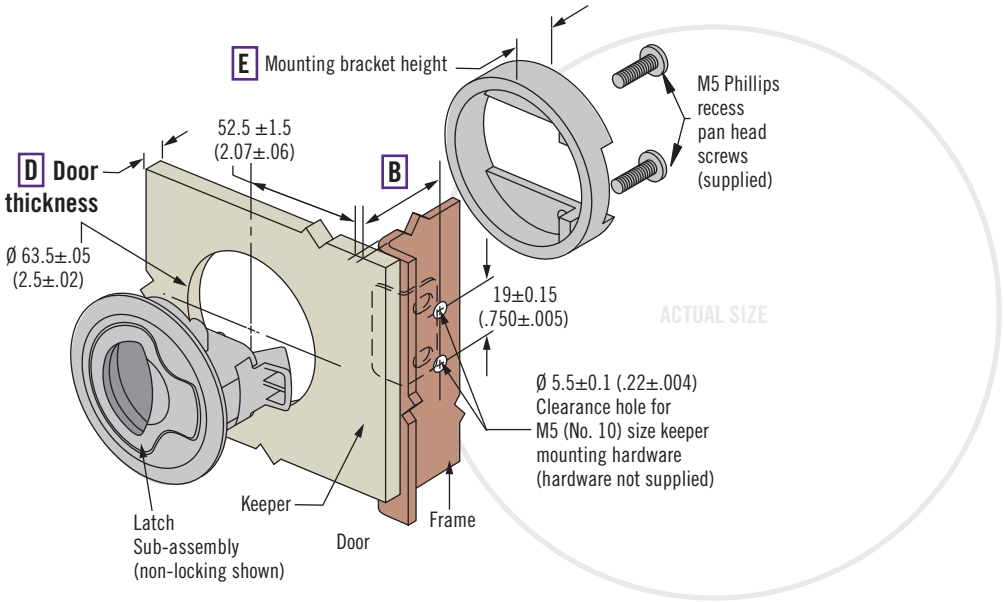

22 (.875)	E Mounting Bracket Height	D Door Thickness		B
		Min.	Max.	
20±0.5 (.75±.02)	22 (.875)	2 (.075)	12 (.475)	27 (1.10)
32±0.5 (1.25±.02)	22 (.875)	2 (.075)	12 (.475)	39 (1.54)
20±0.5 (.75±.02)	12 (.475)	12 (.475)	22 (.875)	27 (1.10)
32±0.5 (1.25±.02)	12 (.475)	12 (.475)	22 (.875)	39 (1.54)

D Door thickness
1 2 - 12 (.075 - .475)
2 12 - 22 (.475 - .875)

G Grip
1 20±0.5 (.75±.02)
2 32±0.5 (1.25±.02)

M1 - 25 - L D - G 8

L Lock style
4 Locking keyed alike (2 keys supplied)
6 Non-locking
7 Key-locking keyed alike S008 (2 overmoulded keys supplied)

Dimensions in millimeters (inch) unless otherwise stated

MP Push-to-Close Latch

50mm (2") size · Plastic

- **Adjustable Grip**
- **Round-hole installation**
- **Inside actuation when locked or unlocked**

Non-Locking

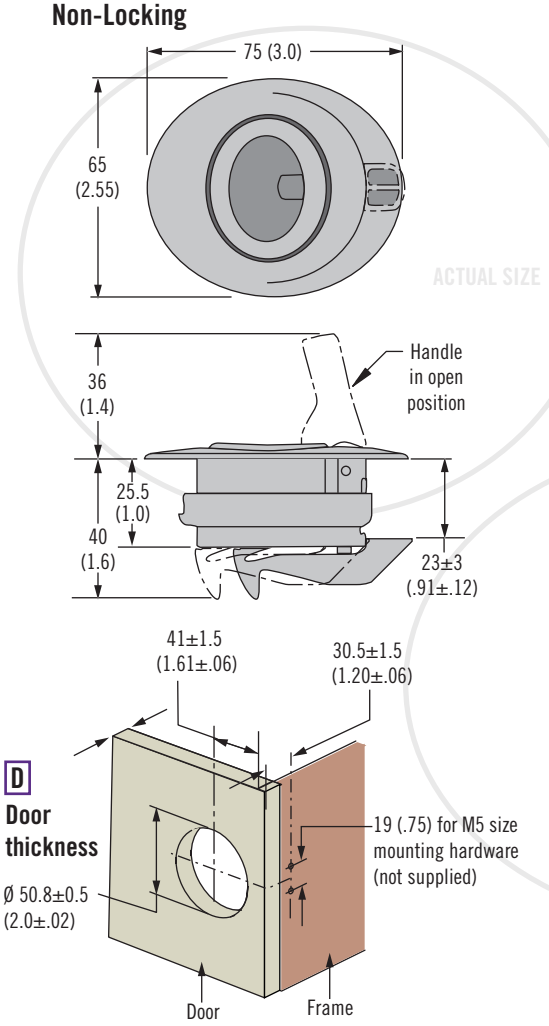

Locking

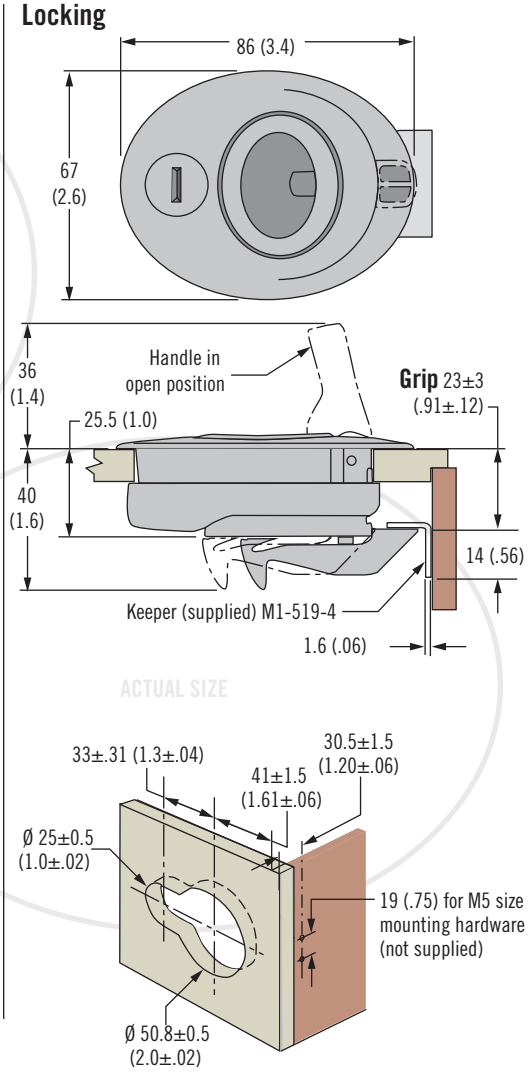

Installation

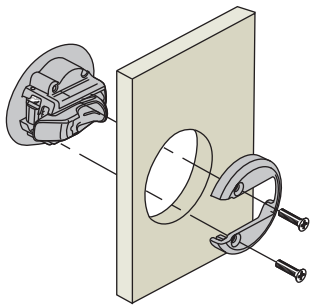

Grip Adjustment

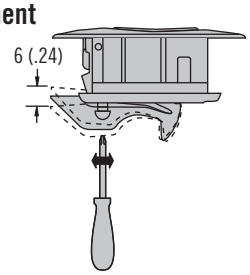

Material and Finish

Housing cover, cup and handle: Stainless steel 316 grade, electropolished

Housing: PC/PBT blend, black or white

Performance Details

Max. working load: 270 N (60 lbf)

Operating temperature range: -18°C (0°F) to 60°C (140°F)

Flammability rating: UL94-HB

Installation Notes

Max. tightening torque on mounting screws (supplied): 1.7 N·m (15 in·lbf)

Accessories

Keeper
Part number: M1-519-4

Key 948 (pair)
Part number: MF-97-948-41

Replacement mounting screw
Part number: MP-520-28-4

Part Number Selection

MP - 03 - 1 L D - F 0

F Finish
- **00** 316 Stainless cover over black housing
- **55** Black housing
- **77** White housing

L Lock style
- **0** Non-locking
- **1** Key-locking keyed alike 948 (2 keys supplied)

D Door thickness
- **0** 10 - 16 (.39 - .63)
- **1** 16 - 22 (.63 - .87)

M1 Push-to-Close Latch

Pull-to-open

- **Single, round-hole installation**
- **Flush pop out knob**
- **Corrosion-resistant materials**

Material and Finish

PC/ABS, black or chrome plated

Performance Details

Max. working load: 310 N (70 lbf)

Operating temperature range: -30ºC (-22ºF) to 60ºC (140ºF)

Flammability rating: UL94-HB

Installation Notes

Max. tightening torque on mounting nut: 4.2 N·m (37 in·lbf)

Accessories

Replacement Keeper
Part number: M1-2A-9-105-41

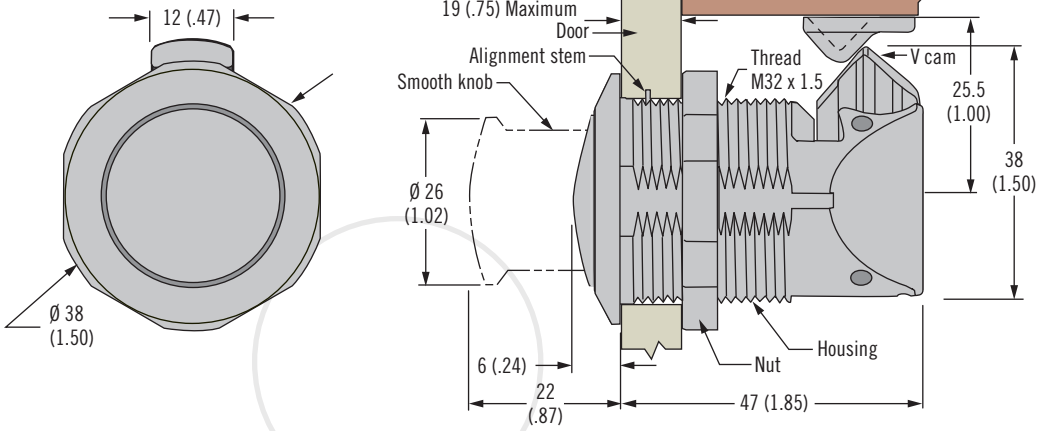

Closed

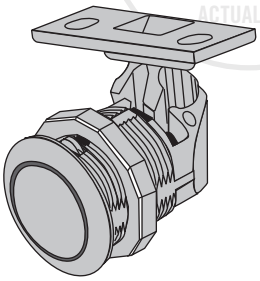

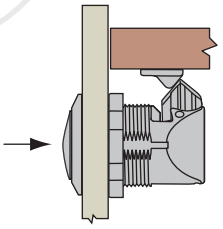

Push To Pop Out Knob

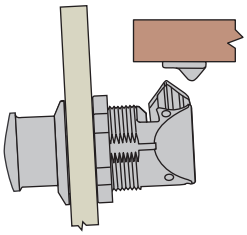

Pull Knob To Open

Installation

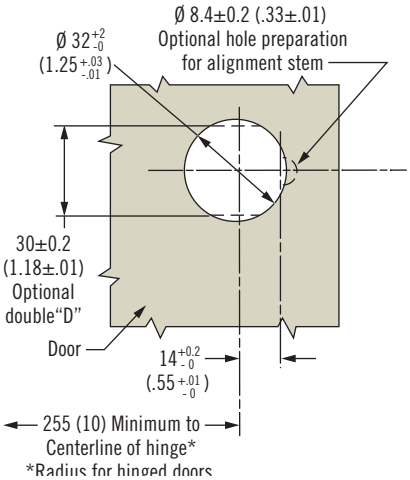

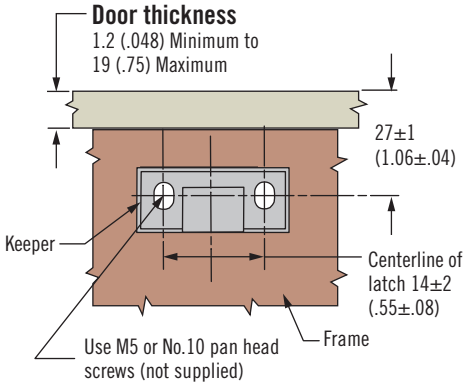

Keeper

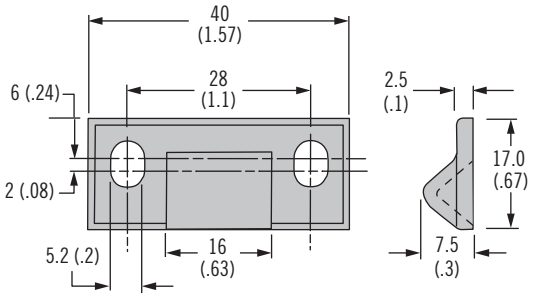

Part Number

See table

Finish	Part Number
Chrome	M1-2A-15-1
Black	M1-2A-15-5

Dimensions in millimeters (inch) unless otherwise stated

M1 Push-to-Close Latch

Turn-to-open

Non-Locking

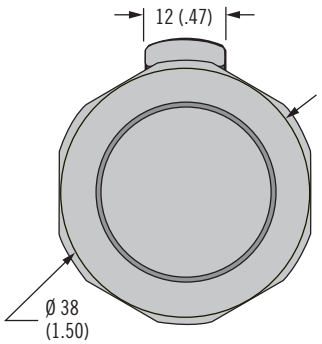

Locking

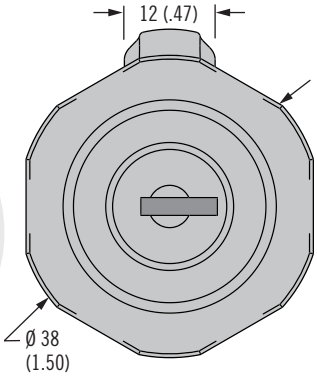

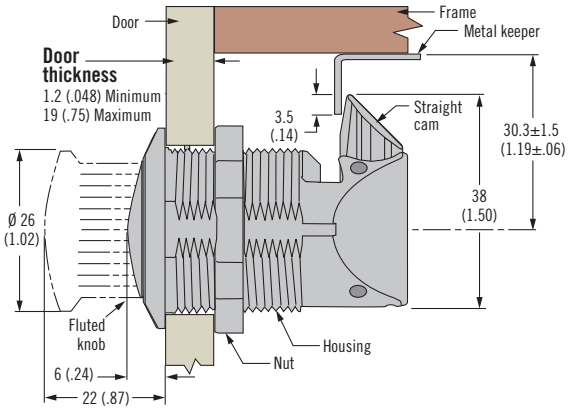

Keeper

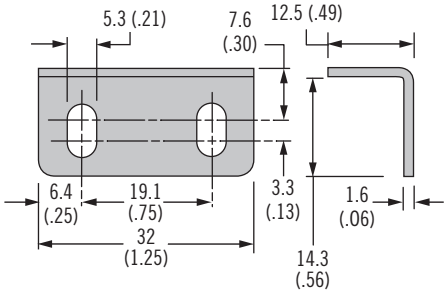

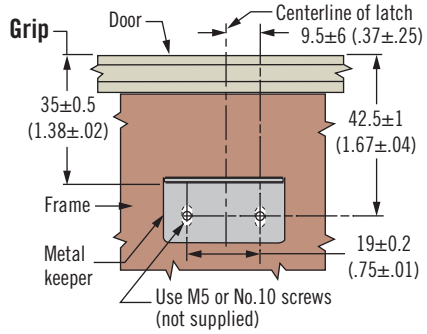

Installation

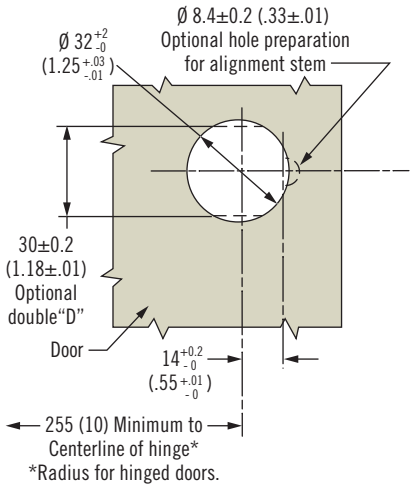

Finish	Part Number	
	Non-locking	Locking
Chrome	M1-2A-13-1	-
Black	M1-2A-13-5	M1-2A-23-5

- **Single, round-hole installation**
- **Flush pop out knob**
- **Corrosion-resistant materials**

Material and Finish

PC/ABS, black or chrome plated

Performance Details

Max. working load: 310 N (70 lbf)

Operating temperature range:
-30ºC (-22ºF) to 60ºC (140ºF)

Flammability rating: UL94-HB

Installation Notes

Max. tightening torque on mounting nut:
4.2 N·m (37 in·lbf)

Accessories

Replacement Keeper
Part number: M1-519-4

Closed

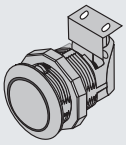

Push To Pop Out Knob

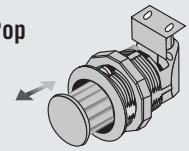

Turn Knob To Open

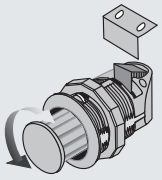

Part Number

See table

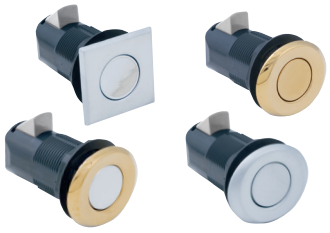

MP Point Push-to-Close Latch

Pull-to-open

- **Single, round-hole installation**
- **Flush pop out knob**
- **Corrosion-resistant materials**
- **Keeper sold separately**

Material and Finish

Housing: Glass-filled nylon

Flange and knob: Zinc alloy, plated

Cam: Zinc alloy

Fixed keeper: Stainless steel

Hooded keeper: Nylon, black

Installation Notes

Maximum tightening torque on mounting nut: 4.5 N·m (40 in·lbf)

Fixed keeper: Use M5 or No. 10 screws to mount (not supplied)

Hooded keeper: Use M5 or No. 10 screws to mount (not supplied)

Accessories

Matching pulls available

see page 597

H Housing Style

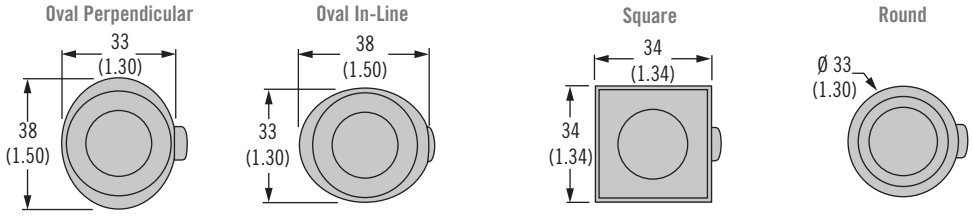

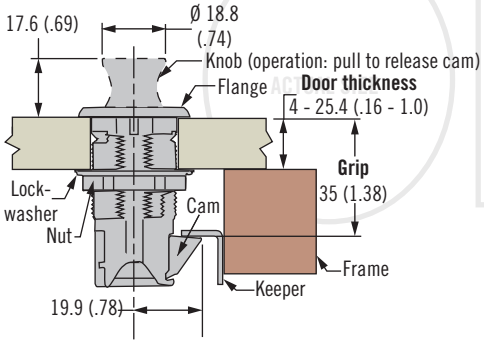

Installation

Latch Only (for keeper installation below)

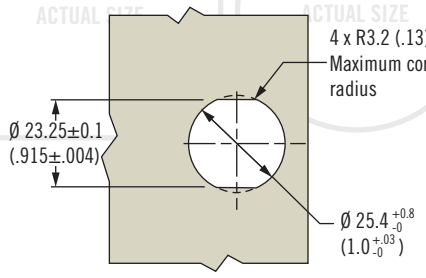

Fixed Keeper

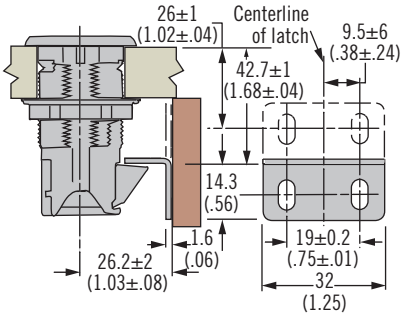

Hooded Keeper

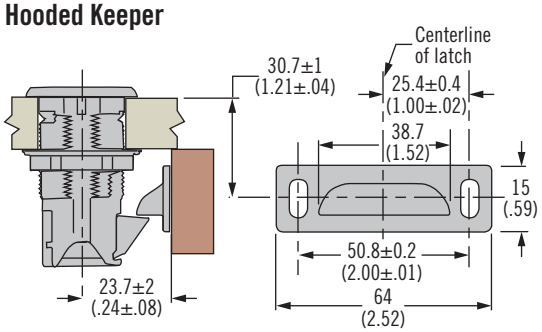

Fixed Keeper	Hooded Keeper
M1-519-4	MP-510-16-4

Part Number Selection

Latch only, keepers sold separately.

H Housing style
- **11** Oval perpendicular
- **12** Oval in-line
- **21** Square
- **31** Round

MP - 05 - H 2 - F K

F Flange finish
- **1** Chrome plated
- **2** Satin chrome plated
- **3** Brushed nickel plated
- **5** Black powder coated

K Knob finish
- **1** Chrome plated
- **2** Satin chrome plated
- **3** Brushed nickel plated
- **5** Black powder coated

Dimensions in millimeters (inch) unless otherwise stated

MP Point Coat Hook

Pop-up hook

- **Flush pop out hook**
- **Single, round hole installation**
- **Corrosion-resistant materials**

Material and Finish

Housing: Glass-filled nylon

Flange and hook: Zinc alloy, plated

Installation Notes

Maximum tightening torque on mounting nut: 4.5 N·m (40 in·lbf)

H Housing Style (with hanger image, I = 2)

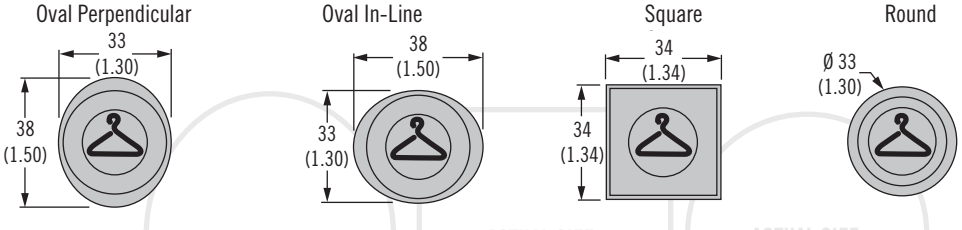

H Housing Style (without hanger image, I = 3)

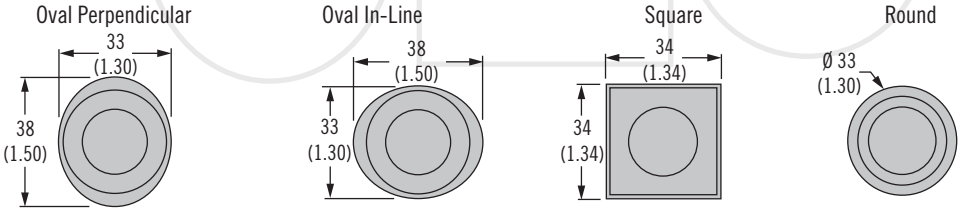

H Housing Style (with headset image, I = 4)

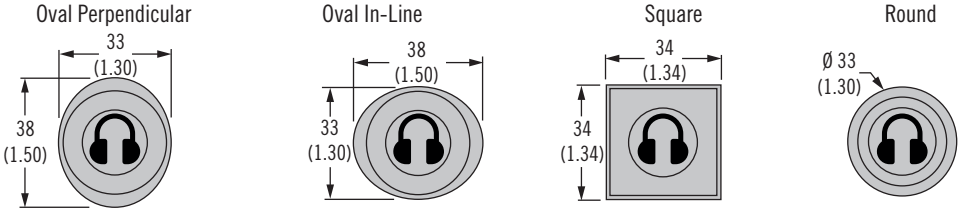

Installation

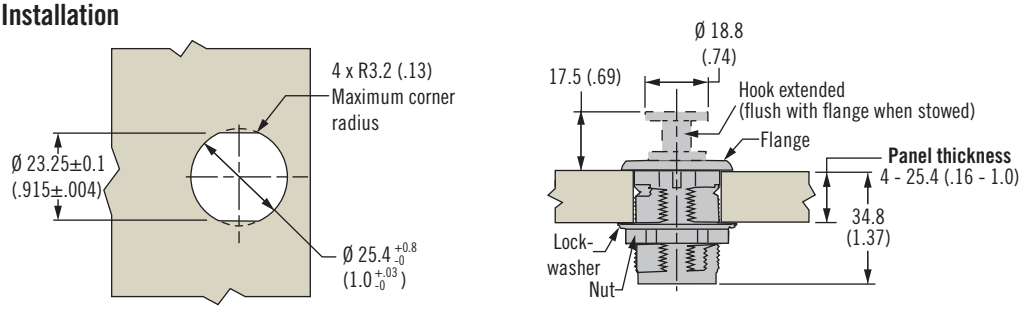

Part Number Selection

H Housing style
- **11** Oval perpendicular
- **12** Oval in-line
- **21** Square
- **31** Round

I Image
- **2** Hanger
- **3** Blank
- **4** Headset

MP - 07 - H I - F K

F Flange finish
- **1** Chrome plated
- **2** Satin chrome plated
- **3** Brushed nickel plated
- **5** Black Powder Coat

K Hook finish
- **1** Chrome plated
- **2** Satin chrome plated
- **3** Brushed nickel plated
- **5** Black Powder Coat

(I = 3 Blank)

A3 Push-to-Close Latch

Slide-to-open · Flush · Locking

- **Single hole snap-in installation**
- **Corrosion-resistant materials**

Material and Finish

Latch: ABS, black
Spring: Stainless steel

Performance Details

Operating temperature range: -40°C (-40°F) to 60°C (140°F)

Flammability rating: UL94-V0

Installation Notes

Prepare a burr free hole

Door thickness must include plating or paint thickness

Accessories

Flat key, keyed alike CH751
(2 keys per ring)
Part number: PK-10-01

Overmoulded key, keyed alike CH751
(2 keys per ring)
Part number: PK-10-01-05

Part Number

See table

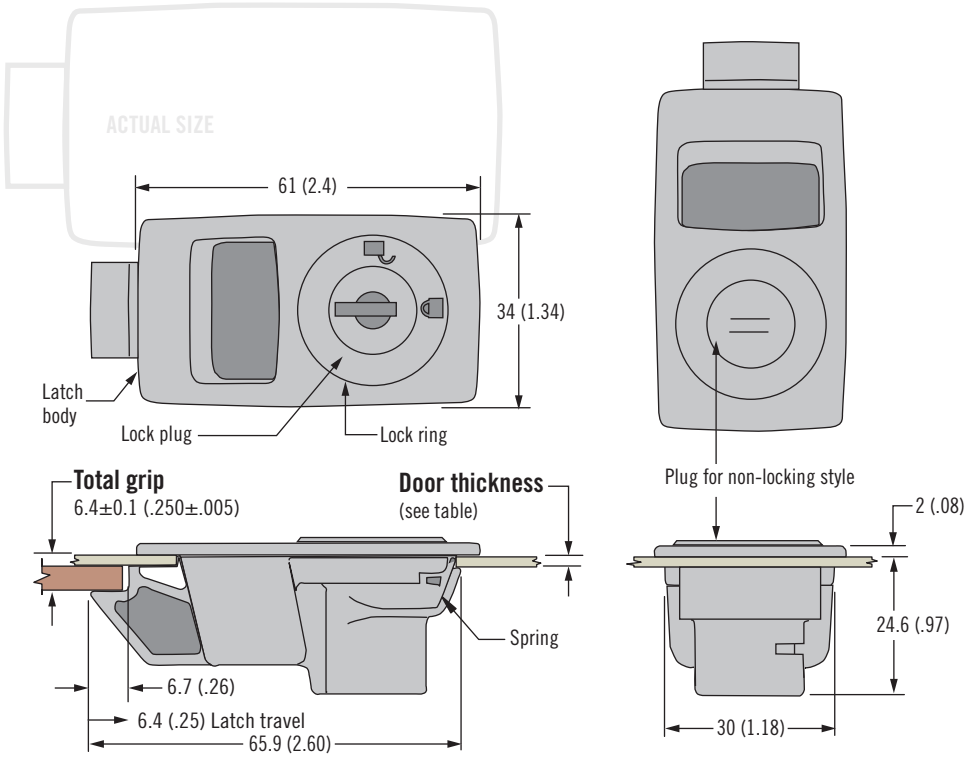

Installation

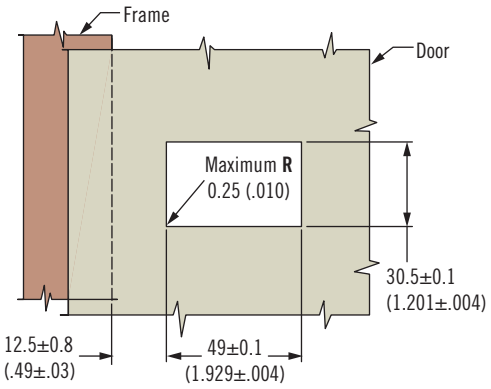

1. Slip front of latch through hole, push forward

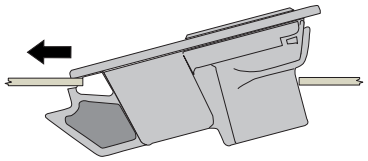

2. Snap back end of latch into position

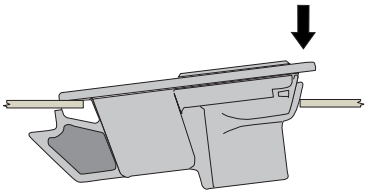

Door Thickness	Part Number		
	Non-Locking	Key-Locking Keyed Alike CH751 (No Keys Supplied)	Key-Locking Keyed Alike CH751 (2 Flat Keys Supplied)
0.9 (.035) to 1.2 (.047)	A3-80-525-12	A3-85-525-12	A3-87-525-12
1.3 (.051) to 1.6 (.062)	A3-80-625-12	A3-85-625-12	A3-87-625-12

Dimensions in millimeters (inch) unless otherwise stated

A3 Push-to-Close Latch

Slide-to-open · Flush

- **Single hole snap-in installation**
- **Corrosion-resistant materials**

Material and Finish

Latch: ABS, black
Spring: Stainless steel

Performance Details

90 series 140 N (32 lbf)
40 series 180 N (40 lbf)
50 and 99 series 220 N (50 lbf)

Operating temperature range:
-40°C (-40°F) to 60°C (140°F)

Flammability rating:
UL94-HB or UL94-V0

Installation Notes

Prepare a burr free hole

Door thickness must include plating or paint thickness

Mini, Small and Medium

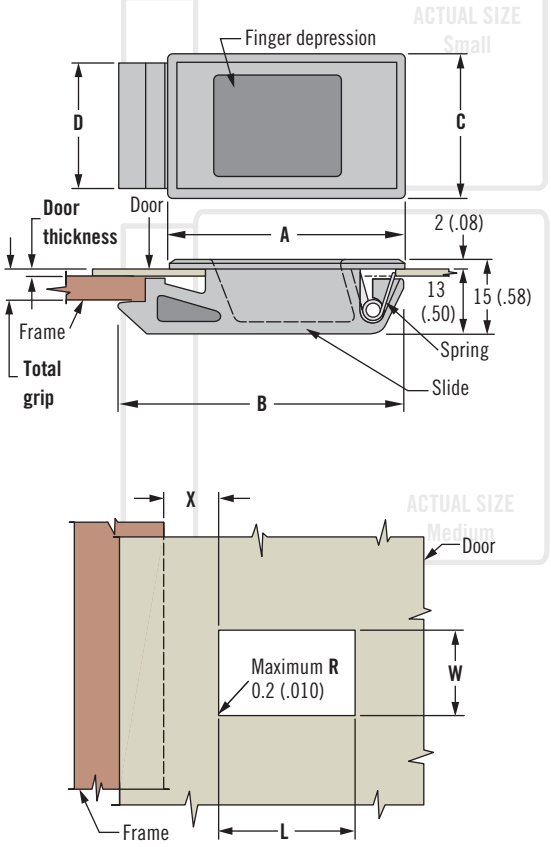

Large (deeper depression)

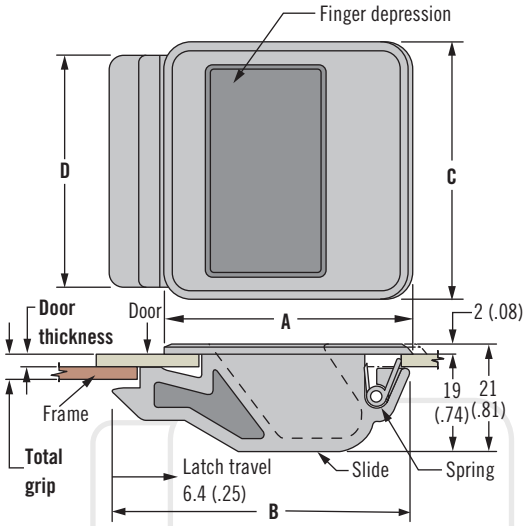

1. Slip front of latch through hole, push forward

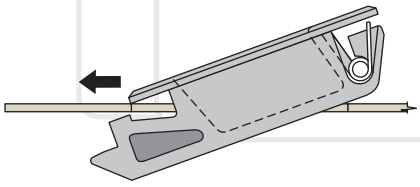

2. Snap back end of latch into position

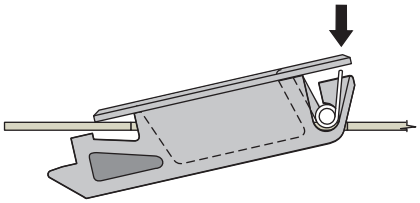

Series	Installation		
	L	W	X
Mini	22.0±0.1 (.870±.005)	22.4±0.1 (0.808±.005)	8.5±0.7 (0.330±.027)
Small	38.1±0.1 (1.500±.005)	25.4±0.1 (1.000±.005)	12.7±0.7 (.50±.03)
Medium		44.5±0.1 (1.750±.005)	
Large			

Size	Door Thickness	Total Grip	Dimensions				Part Number	
			A	B	C	D	UL94-HB	UL94-V0
Mini	1.3±0.1 (.050±.005)	6.4±0.1 (.250±.005)	31 (1.21)	35 (1.37)	25 (.98)	22 (.87)	A3-90-525-12	A3-90-525-25
	1.5±0.1 (.060±.005)	6.4±0.1 (.250±.005)	31 (1.21)	35 (1.37)	25 (.98)	22 (.87)	A3-90-625-12	A3-90-625-25
Small	1.3±0.1 (.050±.005)	6.4±0.1 (.250±.005)	47 (1.84)	57 (2.23)	28 (1.11)	25 (.99)	A3-40-525-12	A3-99-187-12
	1.6±0.1 (.060±.005)	6.4±0.1 (.250±.005)	47 (1.84)	57 (2.23)	28 (1.11)	25 (.99)	A3-40-625-12	A3-99-130-12
Medium	2.2±0.1 (.090±.005)	6.4±0.1 (.250±.005)	47 (1.84)	57 (2.23)	48 (1.87)	44 (1.74)	A3-50-925-12	A3-99-144-12
Large	2.2±0.1 (.090±.005)	6.4±0.1 (.250±.005)	48 (1.87)	57 (2.23)	50 (1.95)	44 (1.74)	A3-99-122-12	A3-99-253-01

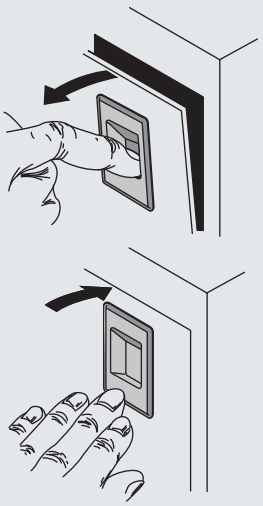

Part Number

See table

A3 Push-to-Close Latch

Slide-to-open · Ergo tab style

- **Single hole snap-in installation**
- **Corrosion-resistant materials**

Material and Finish

Latch: PC/ABS, black

Spring: Stainless steel

Performance Details

Max. working load:
Medium: 90 N (20 lbf)

Large:130 N (29 lbf)

Operating temperature range:
-40°C (-40°F) to 60°C (140°F)

Flammability rating: UL94-V0

Installation Notes

Prepare a burr free hole

Door thickness must include plating or paint thickness

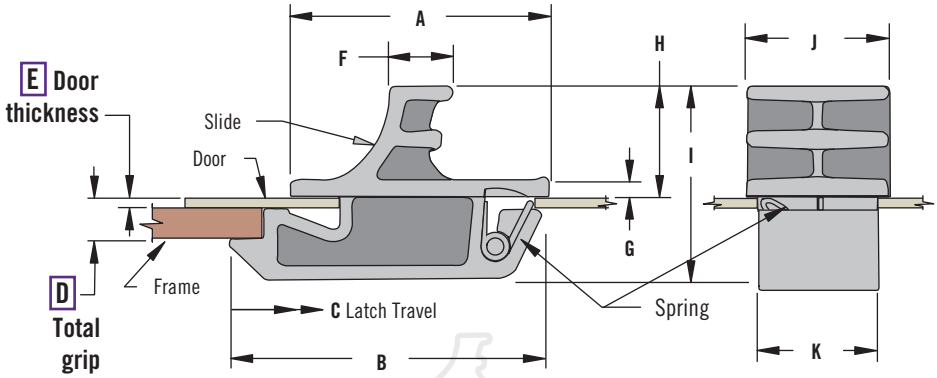

Installation

1. Prepare burr-free hole

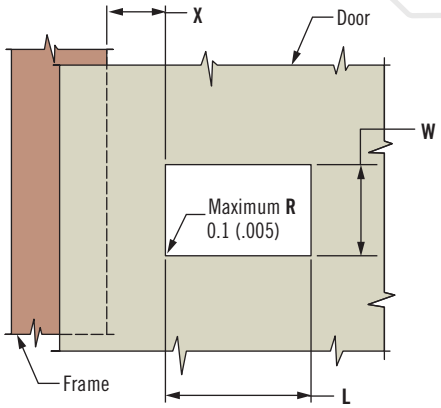

2. Slip front of latch through hole
Push forward

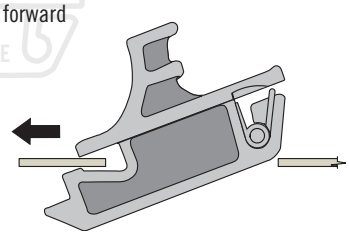

3. Snap back end of latch into position

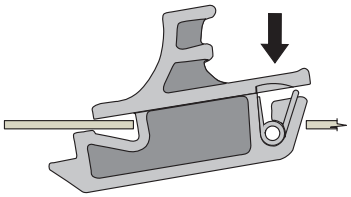

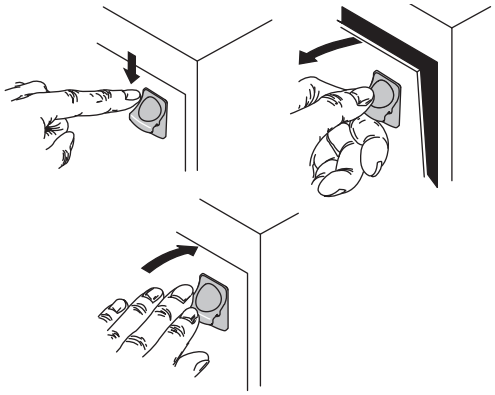

Size	Installation		
	L	W	X
Medium	12.7±0.1 (.500±.005)	7.8±0.05 (.307±.002)	6.4±0.8 (.25±.03)
Large	22.2±0.1 (.875±.005)	14.3±0.1 (.562±.005)	9.5±0.8 (.38±03)

Part Number

See table

E Door Thickness	D Total Grip	Dimensions									Part Number	Size
		A	B	C	F	G	H	I	J	K		
1 ± 0.1 (.04±.005)	3 ± 0.1 (.12±.005)	19 (.75)	22.2 (.87)	4 (.16)	5.1 (.20)	1.5 (.06)	8.3 (.33)	15.5 (.61)	9.5 (.37)	7.6 (.30)	A3-70-412-25	Medium
1.2+0.2-0 (.05±.005)	4.8 ± 0.1 (.19±.005)	30.1 (1.19)	36.2 (1.43)	4.3 (.17)	7.2 (.28)	2.2 (.09)	12.8 (.50)	22.4 (.88)	16.5 (.65)	14 (.55)	A3-60-519-25	Large

Dimensions in millimeters (inch) unless otherwise stated

A3 Push-to-Close Latch

Slide-to-open · Tab style

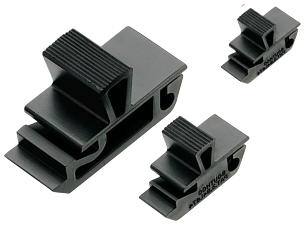

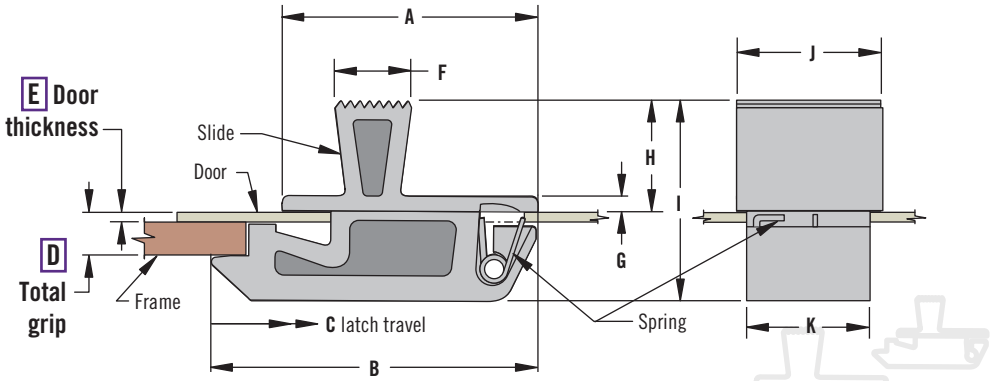

- **Single hole snap-in installation**
- **Corrosion-resistant materials**

Material and Finish

Latch: ABS, black

Spring: Stainless steel

Performance Details

Max. working load:
Small 25 N (5 lbf)

Medium 90 N (20 lbf)

Large 130 N (30 lbf)

Operating temperature range:
-40°C (-40°F) to 60°C (140°F)

Flammability rating: UL94-HB

Installation Notes

Prepare a burr free hole

Door thickness must include plating or paint thickness

Installation

1. Prepare burr-free hole

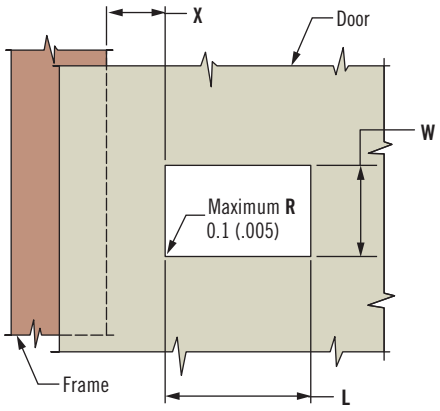

2. Slip front of latch through hole
Push forward.

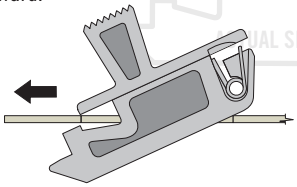

3. Snap back end of latch into position

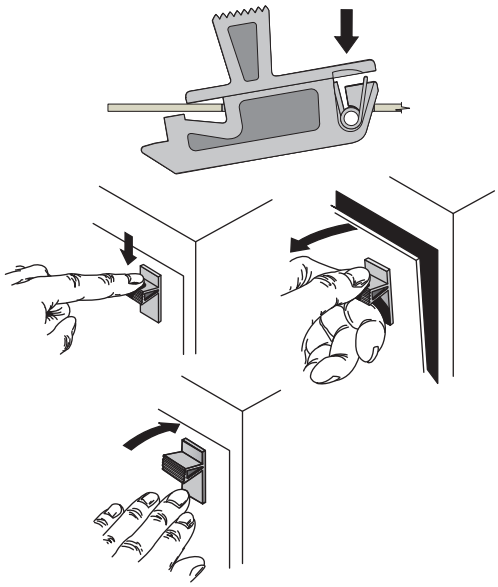

Size	Installation		
	L	W	X
Small	8.33±0.05 (.328±.002)	4.57±0.05 (.180±.002)	4.8 ±0.8 (.19±.03)
Medium	12.7±0.1 (.500±.005)	7.8±0.05 (.307±.002)	6.4±0.8 (.25±.03)
Large	22.2±0.1 (.875±.005)	14.3±0.1 (.562±.005)	9.5±0.8 (.38±03)

Part Number

See table

E Door Thickness	D Total Grip	Dimensions									Part Number	Size
		A	B	C	F	G	H	I	J	K		
0.76±.08 (.030±.003)	2.54±0.13 (.100±.005)	11.9 (.47)	15.1 (.59)	3 (.12)	4.0 (.16)	0.8 (.03)	5.6 (.22)	11.1 (.44)	6.0 (.23)	4.4 (.17)	A3-10-310-12	Small
1±0.1 (.04±.005)	3±0.1 (.12±.005)	18 (.70)	22.5 (.87)	4 (.16)	5.5 (.22)	1.5 (.06)	8.5 (.33)	15.5 (.61)	9.5 (.37)	7.5 (.30)	A3-20-412-12	Medium
1.2+0.2-0 (.05±.005)	4.8±0.1 (.19±.005)	29 (1.13)	36 (1.41)	4.3 (.17)	9 (.34)	2 (.08)	13 (.50)	22.5 (.87)	16.5 (.64)	14 (.55)	A3-30-519-12	Large

93 Push-to-Close Latch

Push button to open

- **Push button opening**
- **Single hole installation**
- **Optional ejector spring helps prevent rattles**

Material and Finish

Latch: ABS, black
Spring: Stainless steel

Performance Details

Max. working load:
530 N (120 lbf)

Flammability rating: UL94-HB

Installation Notes

Max. tightening torque on mounting nut: 7.9 N·m (70 in·lbf)

Accessories

Flat key, keyed alike CH751
(2 keys per ring)
Part number: PK-10-01

Overmoulded key, keyed alike CH751
(2 keys per ring)
Part number: PK-10-01-05

Pull tab (optional) part number:
In-line 93-21-301-14
Perpendicular 93-21-322-14

Keeper (replacement) part number:
93-14-101-24

Ejector spring (optional)
part number: 93-22-302-18

Part Number

See table

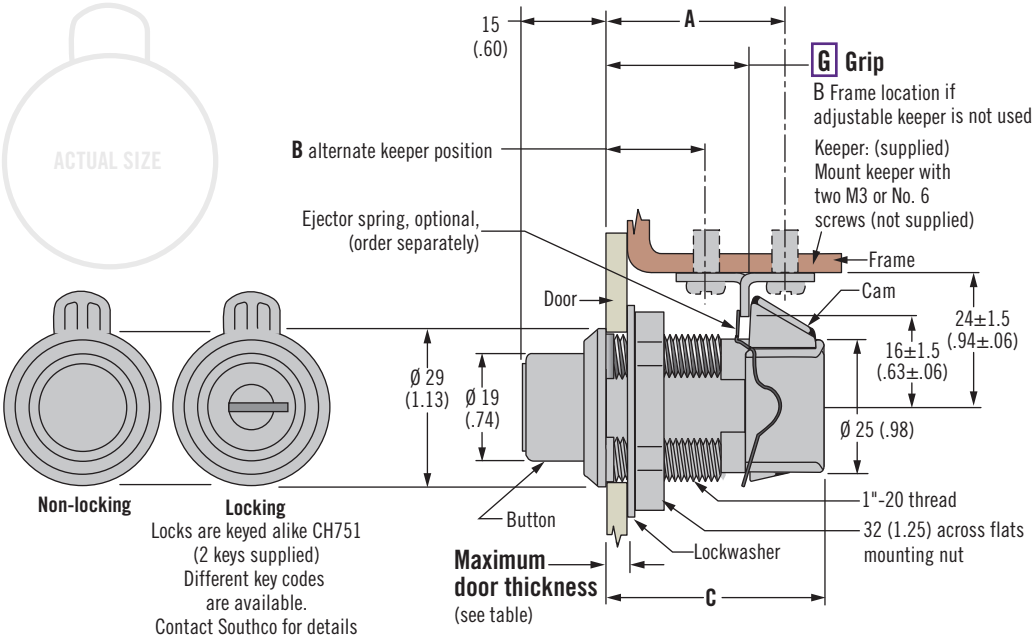

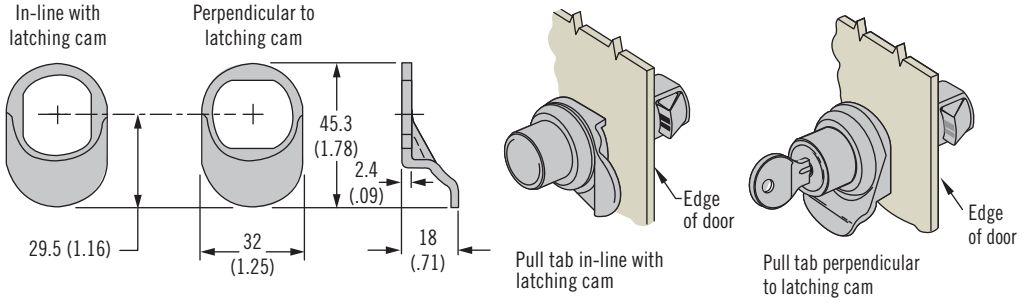

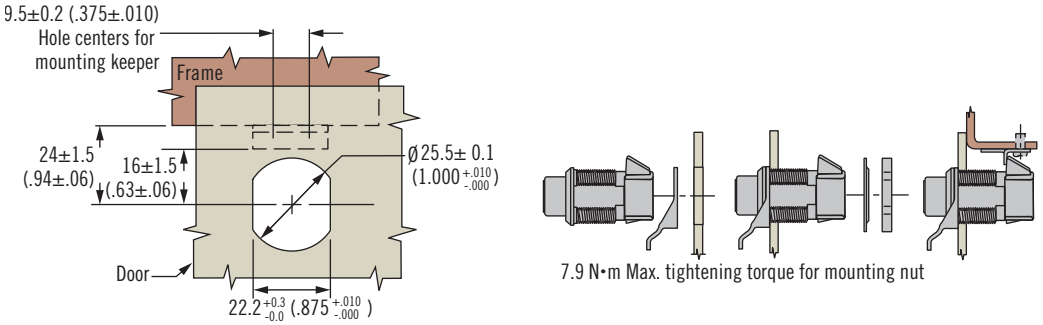

Style	Max. Door Thickness	G Grip	Dimensions			Latch Part Number	
			A	B	C Ref	Key-Locking (2 Flat Keys Supplied)	Non-Locking
Pull tab in-line with latching Cam	10.3 (.407)	23 +0.1 -.07 (.907 +0 -.032)	29.5±1.5 (1.16±.06)	14.5±1.5 (.57±.06)	37 (1.47)	93-303	93-304
Pull tab perpendicular to latching Cam	10.3 (.407)	23 +0.1 -.07 (.907 +0 -.032)	29.5±1.5 (1.16±.06)	14.5±1.5 (.57±.06)	37 (1.47)	93-313	93-314
Latch only	12.7 (.500)	25±0.4 (1.000 +0 -.032)	32±1.5 (1.25±.06)	17±1.5 (.66±.06)	40 (1.57)	93-307	93-308

Dimensions in millimeters (inch) unless otherwise stated

93 Push-to-Close Latch

Key actuated

Large

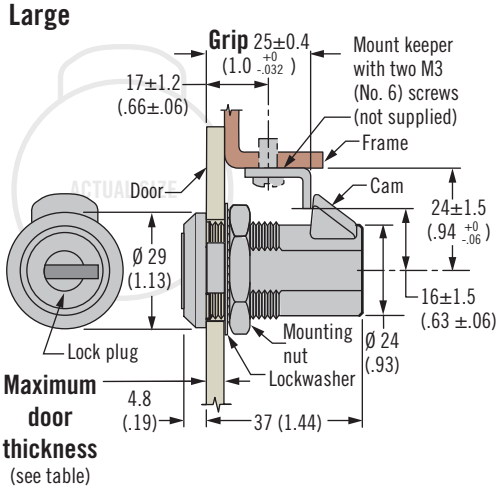

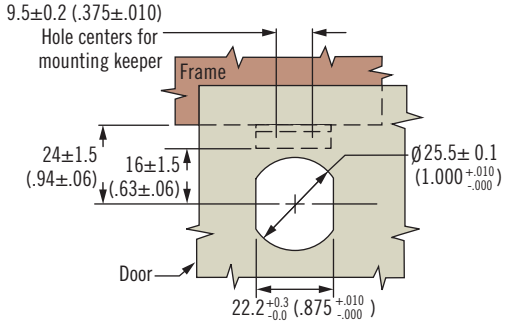

Small

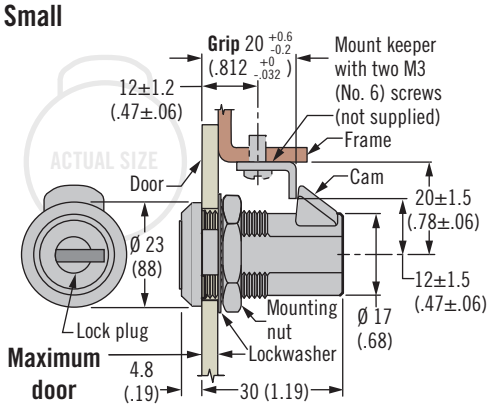

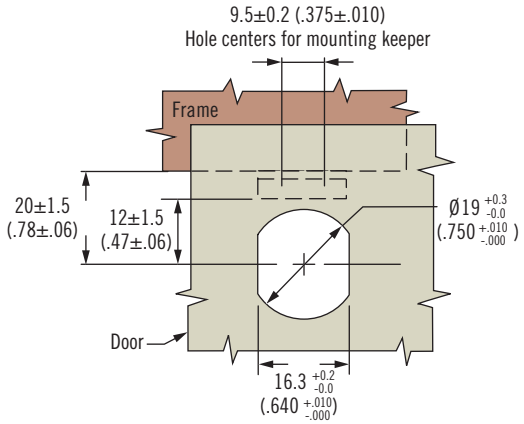

Sealing Cover (optional)

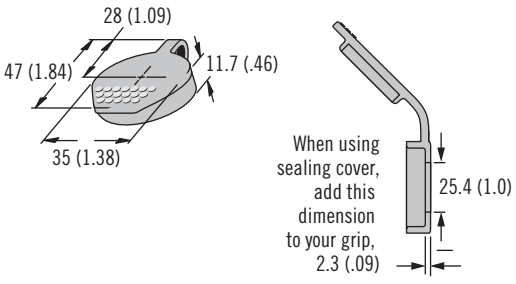

Sealing Cover (optional)

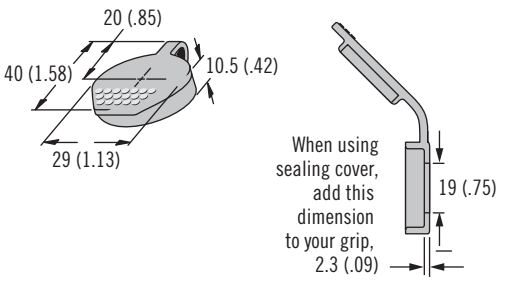

Size	Max. Door Thickness	Latch Part Number	Lock Core Finish	Sealing Cover (Optional) Part Number
		Locking Keyed Alike CH751 (2 Flat Keys Supplied)		
Large	12.7 (.500)	93-10-101-10	Bright	90-4
Small	9.5 (.375)	93-10-201-50	Black	90-2
		93-10-201-10	Bright	

- **Key only operation for access restriction**
- **Single hole installation**

Material and Finish

Latch: Zinc alloy, zinc plated or black powder coated

Performance Details

Max. working load:
Large: 560 N (125 lbf)
Small: 330 N (75 lbf)

Operating temperature range:
-18°C (0°F) to 65°C (150°F)

Flammability rating: UL94-HB

Installation Notes

Max. tightening torque on mounting nut: 7.9 N·m (70 in·lbf)

Accessories

Flat key, keyed alike CH751
(2 keys per ring)
Part number: PK-10-01

Overmoulded key, keyed alike CH751
(2 keys per ring)
Part number: PK-10-01-05

Pull tab (optional - large size only):
Part number:
In-line: 93-21-301-14
Perpendicular: 93-21-322-14

Keeper (replacement)
Part number: 93-14-101-11

Part Number

See table

93 Push-to-Close Latch

Turn-to-open · Knob style

- **Turn-to-open**
- **Single hole installation**

Material and Finish

Latch: Zinc alloy, chrome plated
Knob: Polycarbonate black

Performance Details

Max. working load:
Large: 560 N (125 lbf)

Small: 330 N (75 lbf)

Operating temperature range:
-18°C (0°F) to 65°C (150°F)

Flammability rating: UL94-HB

Installation Notes

Max. tightening torque on mounting nut: 7.9 N·m (70 in·lbf)

Accessories

Flat key, keyed alike CH751
(2 keys per ring)
Part number: PK-10-01

Overmoulded key, keyed alike CH751
(2 keys per ring)
Part number: PK-10-01-05

Keeper (replacement)
Part number: 93-14-101-11

Part Number

See table

Large

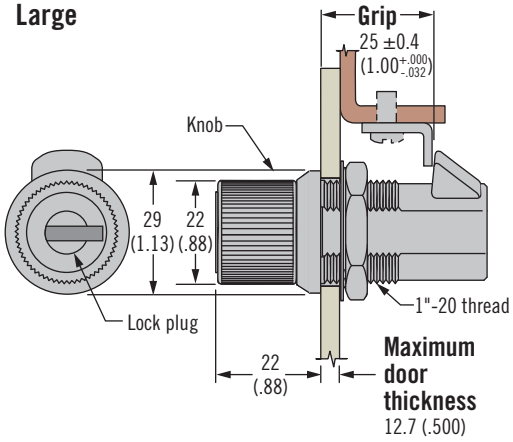

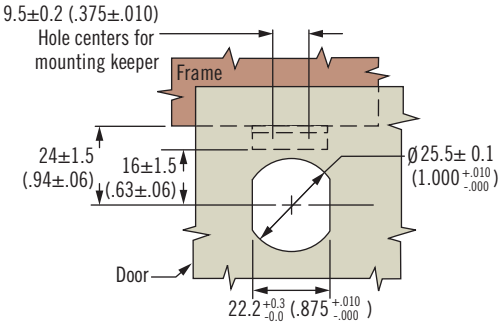

Small

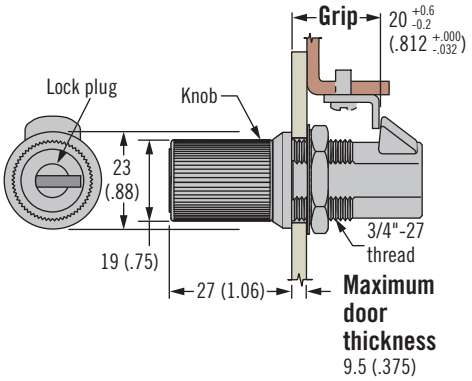

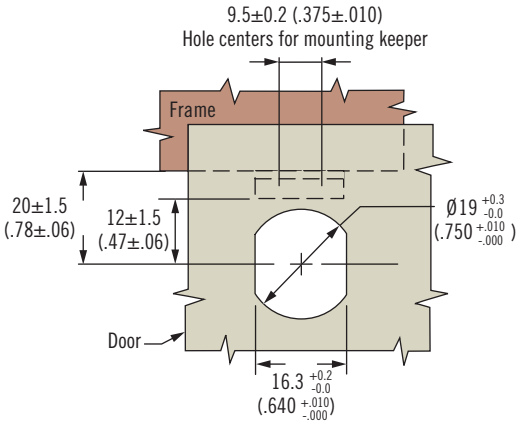

Size	Latch Part Number		Lock Core Finish
	Locking (2 Flat Keys Supplied)	Non-locking	
Large	93-10-102-50	93-10-103-50	Black
	93-10-102-10	93-10-103-10	Bright
Small	93-10-202-50	93-10-203-50	Black
	93-10-202-10	93-10-203-10	Bright

Dimensions in millimeters (inch) unless otherwise stated

93 Push-to-Close Latch

Turn-to-open · Wing style

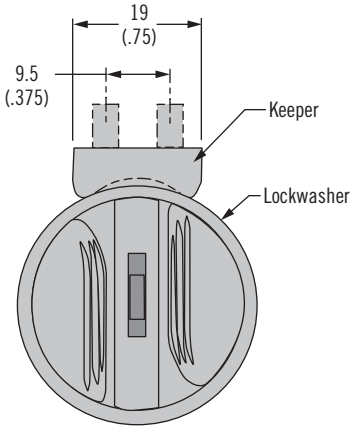

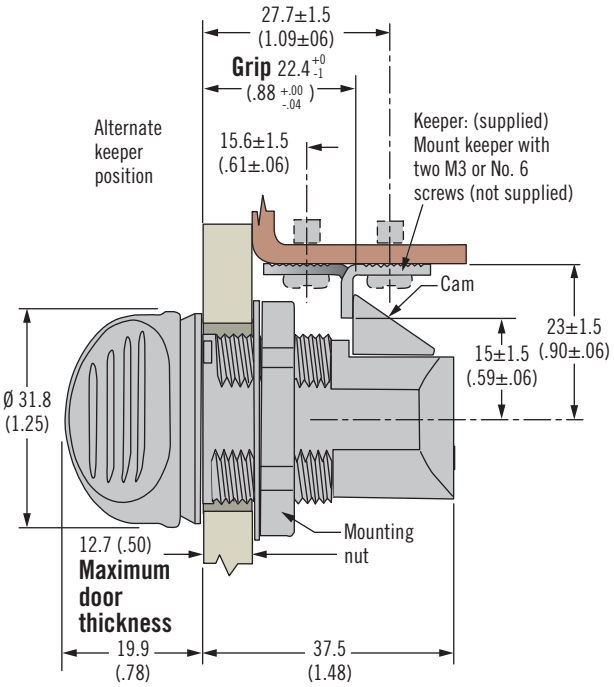

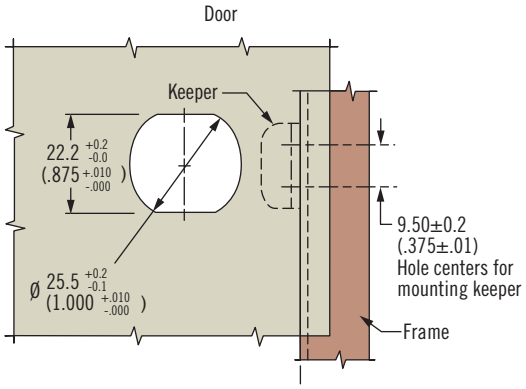

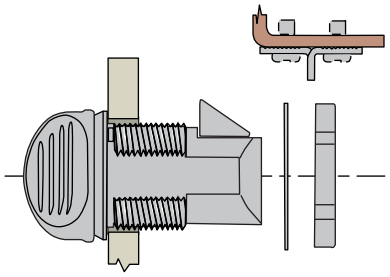

Latch Part Number (2 Flat Keys Supplied)
93-402

- **Turn-to-open**
- **Single hole installation**

Material and Finish

Glass-filled nylon and acetal, black

Performance Details

Max. working load: 425 N (100 lbf)

Operating temperature range: -20°C (0°F) to 65°C (150°F)

Flammability rating: UL94-HB

Installation Notes

Max. tightening torque on mounting nut: 6 N·m (53 in·lbf)

Accessories

Flat key, keyed alike CH751
(2 keys per ring)
Part number: PK-10-01

Overmoulded key, keyed alike CH751
(2 keys per ring)
Part number: PK-10-01-05

Keeper (replacement):
Part number: 93-14-101-24

Part Number

See table

R3 Push-to-Close Latch

Pull-to-open · Paddle handle · Baggage door latch

- **Environmentally sealed**
- **Emergency release**
- **For use with R4 rotary latches**

Material and Finish

Latch assembly: Zinc alloy, black or white powder coated or chrome plated

Slide bolt: Zinc alloy, zinc plated

Striker mounting plates and brackets: Steel, zinc plated

Performance Details

Max. working load: 560 N (125 lbf)

Installation Notes

Max. tightening torque on mounting screws: 2.8 N·m (25 in·lbf)

Notes

*For lock core selection and a complete overview of the *SOUTHCO®* Key-Choice System see page 190

Part Number

Order latch, bracket and mounting screws separately.

For latch see table

For bracket and mounting screws see page 273

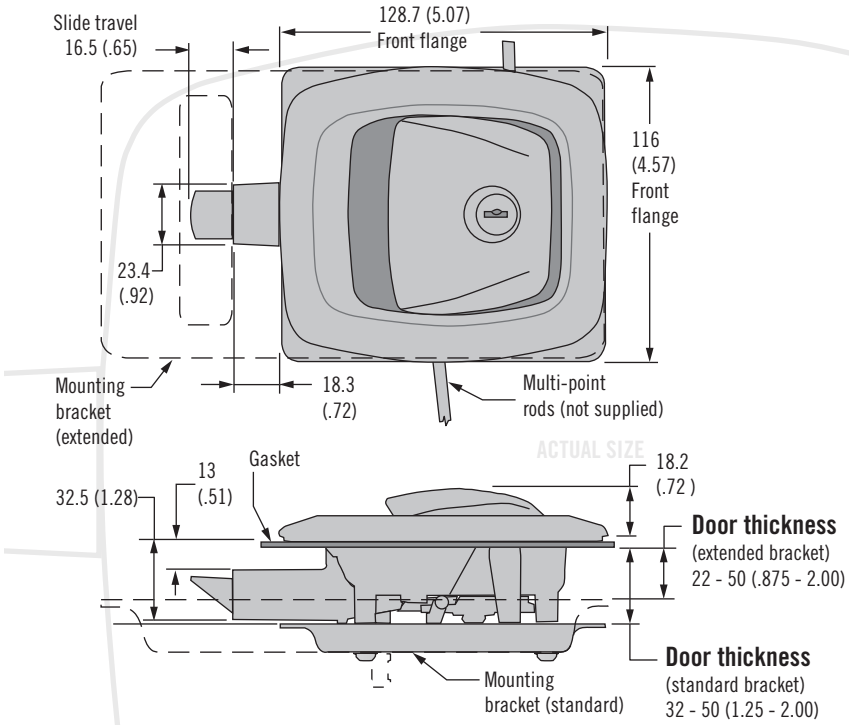

Multi-Point Capable

For applicable rotary latches see page 255

Actuating rods are not supplied
Recommended rod configuration shown below

Rod A

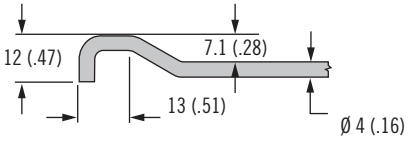

Rod B

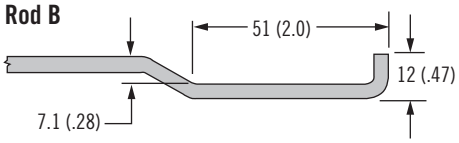

Latch shown in actuated (unlatched) position
(slide retracted)

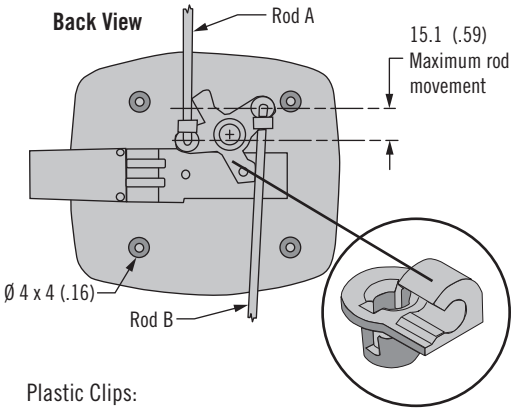

Plastic Clips:
Part number:
R4-0-43922 for 4mm rods are available as an option

Latch Finish	Part Number			
	Locking (CH751) (2 Flat Keys Included)	Locking (Reversible Key) R001 (2 Flat Keys Included)	Locking (No Core)*	Non-Locking
Chrome, polished	R3-20-350-10	R3-20-320-10	R3-20-390-10	R3-20-300-10
Black powder coated	R3-20-350-50	R3-20-320-50	R3-20-390-50	R3-20-300-50
White powder coated	R3-20-350-70	R3-20-320-70	R3-20-390-70	R3-20-300-70

Dimensions in millimeters (inch) unless otherwise stated

Standard Bracket

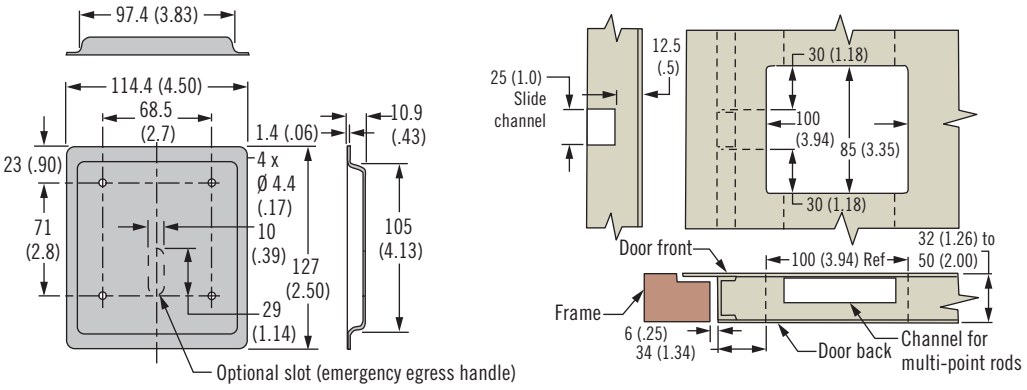

Extended Bracket

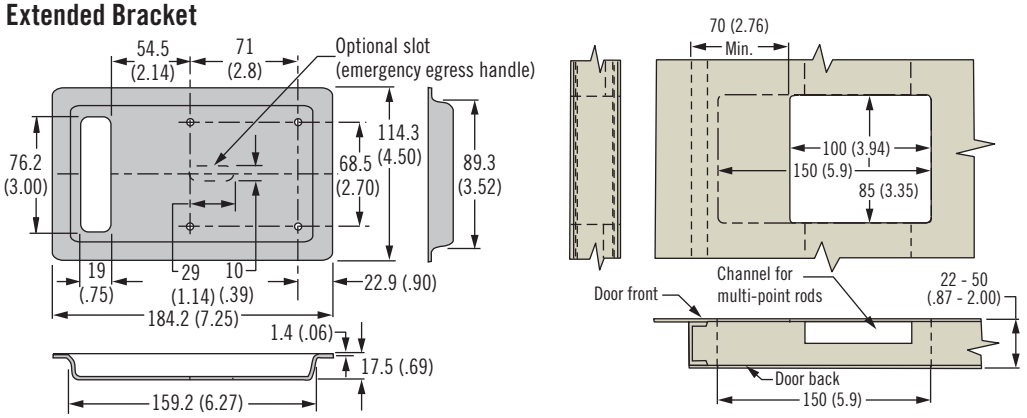

U-Bracket (slot for emergency egress handle included)

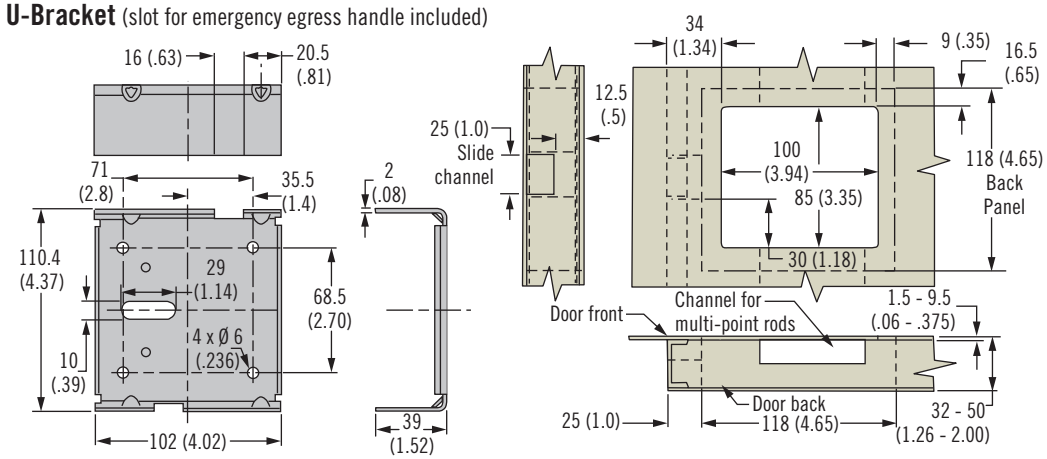

Accessories

Flat key, keyed alike CH751
(2 keys per ring)
Part number: PK-10-01

Overmoulded key, keyed alike CH751
(2 keys per ring)

Part number: PK-10-01-05

Overmoulded key, keyed alike R001
(2 keys per ring)
Part number: PK-10-01-KR001

Emergency egress handle (optional):
Part number: R3-21-110

Notes

U-bracket is intended for sheet metal door applications

Part Number

Order latch, bracket and mounting screws separately.

For latch see page 272

For bracket and mounting screws see table

Bracket Part Number		No. 8 Self Tapping Screw (Part Number By Length)				
		R3-23-250-01	R3-23-250-02	R3-23-250-03	R3-23-250-04	R3-23-250-05
		16 (.625) Long	19 (.750) Long	25.4 (1.00) Long	32 (1.250) Long	38 (1.500) Long
Standard Bracket	R3-23-160-11-01	32 (1.250)	32 (1.250) - 38 (1.500)	38 (1.500) - 44 (1.750)	44 (1.750) - 50 (2.00)	–
Extended Bracket	R3-23-162-11-01	22 (.875) - 25 (1.00)	25 (1.000) - 32 (1.250)	32 (1.250) - 38 (1.500)	38 (1.500) - 44 (1.750)	44 (1.750) - 50 (2.00)
U-Bracket	R3-23-161-11	1.5 (.0620 - 4.8 (.187)	4.8 (.187) - 9.5 (.375)	–	–	–
		Door thickness				

R3 Push-to-Close Latch

Pull-to-open · Paddle handle · Entry door latch

- **Environmentally sealed**
- **Dual sided access and locking**

Material and Finish

Latch assembly: Zinc alloy, black powder coated or white or chrome plated

Slide bolt: Zinc alloy, zinc plated

Striker mounting plates and brackets: Steel, zinc plated

Performance Details

Max. working load: 560 N (125 lbf)

Operating temperature range: -18°C (0°F) to 60°C (140°F)

Installation Notes

Max. tightening torque on mounting screws: 2 N·m (14 in·lbf)

Accessories

Overmoulded key, keyed alike CF305 (2 keys per ring)
Part number: PK-10-01-09-CF305

Replacement screws
Part number: R3-13-310

Notes

Mounting plate, striker plate and all mounting screws except striker plate screws are provided with each lock set.

Part Number

See table

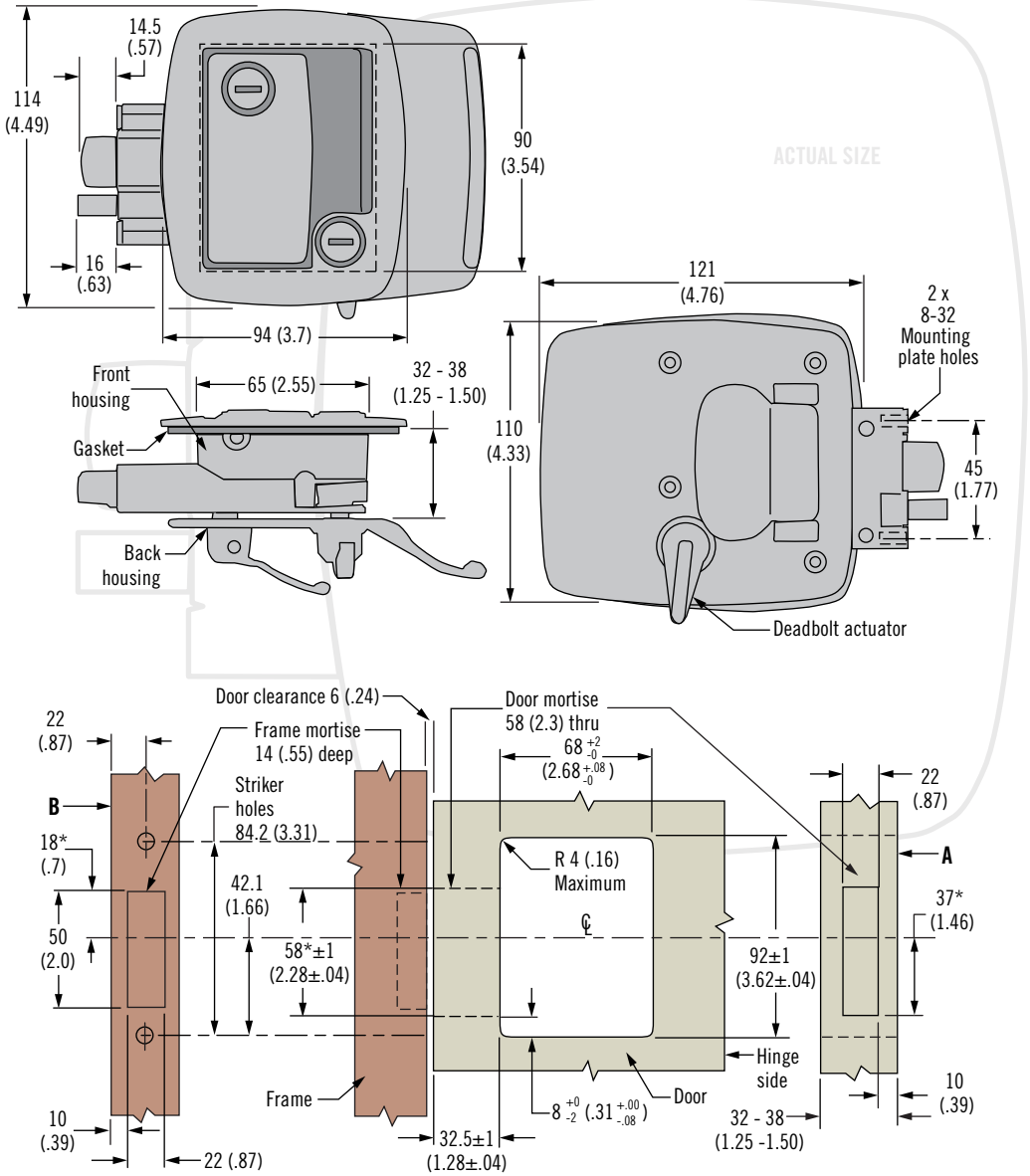

*For left hand mounting mirror the dimensions marked with * by moving them to the other side of the centreline.

Mounting Plate

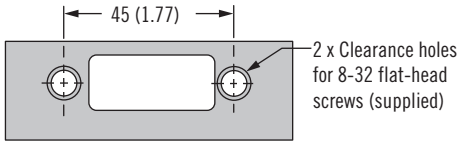

Striker Plate

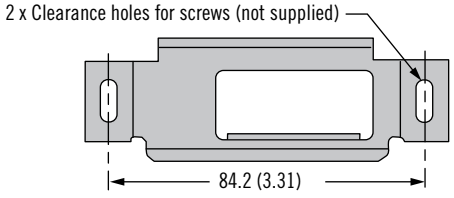

Finish	Latch Part Number
Chrome, polished	R3-10-311-10
Black powder coated	R3-10-311-50
White Powder coated	R3-10-311-70

Part Number	
Mounting plate	R3-13-190
Striker plate	R3-13-180

Dimensions in millimeters (inch) unless otherwise stated

R4 Push-to-Close Latch

Lift-to-open · Flush

- **Lift-to-open**
- **Single hole installation**
- **Rotary latching**

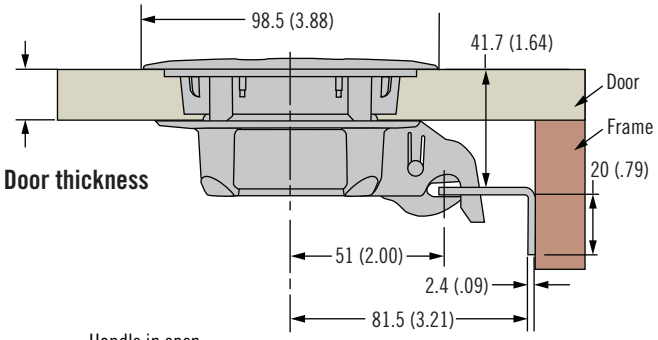

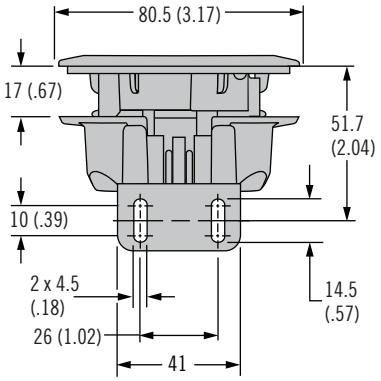

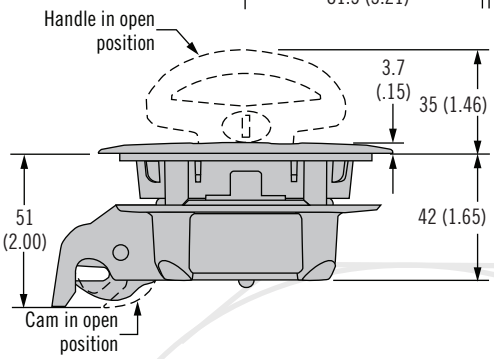

Keeper (order separately)

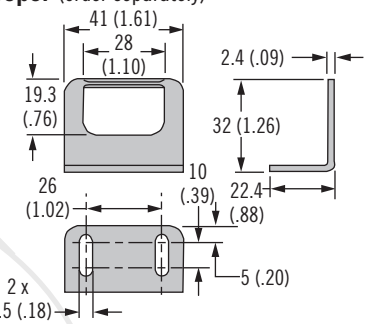

Four options for handle orientation

Install keeper using 2 x M4 or (No. 8) screws (not supplied)

Perpendicular Handle Orientation

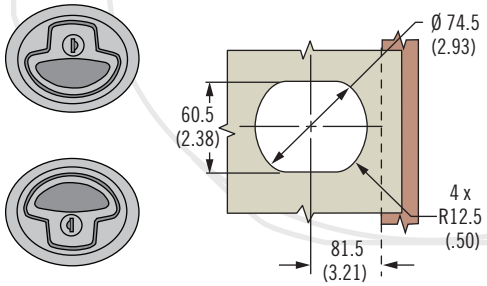

In-Line Handle Orientation

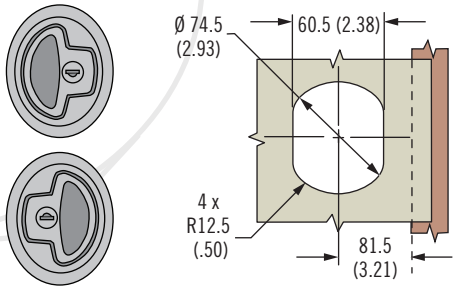

L **Lock-style**
- **0** Non-locking
- **1** Key-locking keyed alike R001 (2 keys supplied)

D **Door Thickness**
- **0** 1 to 23.9 (.04 to .94)
- **1** 24 to 27 (.94 to 1.1)

R4 - 60 - 2 L D - F F

F **Finish upper housing**
- **5** Black
- **7** White

F **Finish lower housing**
- **5** Black
- **7** White

Part Number	Spacer Thickness	Door Thickness					
		1 - 4.9 (.04 - .19)	5 - 9.9 (.19 - .39)	10 - 14.9 (.39 - .59)	15 - 19.9 (.59 - .78)	20 - 23.9 (.78 - .94)	24 - 27.9 (.94 - 1.1)
Part Number R4-64-13-1 Spacers Required	4 (.16)	0	1	0	1	0	0
Part Number R4-64-13-2 Spacers Required	8 (.31)	2	1	1	0	0	0

Material and Finish

Glass reinforced nylon and acetal, black

Performance Details

Max. working load: 290 N (65 lbf)

Operating temperature range: -20°C (0°F) to 65°C (150°F)

Flammability rating: UL94-HB

Installation Notes

Max. tightening torque on mounting screws 1.4 N·m (12.4 in·lbf)

Accessories

Flat key, keyed alike R001 (2 keys per ring)
Part number: PK-10-01-KR001

Keeper: Part number R4-64-11

Mounting screws (replacement): Recessed T15 *TORX®* / Slot M4.2 x 1.4:
Part number: M1-0-33211-24 or R4-0-51779-24

Part Number Selection

Order latch, keeper and spacers separately

See table for spacer width and number required by door thickness

M1 Push-to-Close Latch

Lift-to-open · Flush

- **Lift-to-open**
- **Single hole installation**
- **Dual sided latching**

Material and Finish

Latching slides and mounting bracket:
Glass reinforced nylon, black
Housing and paddle:
Polycarbonate/ABS, black

Performance Details

Max. working load: 500 N (112 lbf)

Flammability rating: UL94-HB

Installation Notes

Max. tightening torque on *TROX*® mounting screws: 1.8 N·m (16 in·lbf)

Accessories

Flat key, keyed alike CH751
(2 keys per ring)
Part number: PK-10-01

Overmoulded key, keyed alike CH751
(2 keys per ring)
Part number: PK-10-01-05

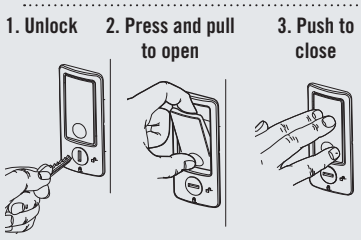

Part Number

See table

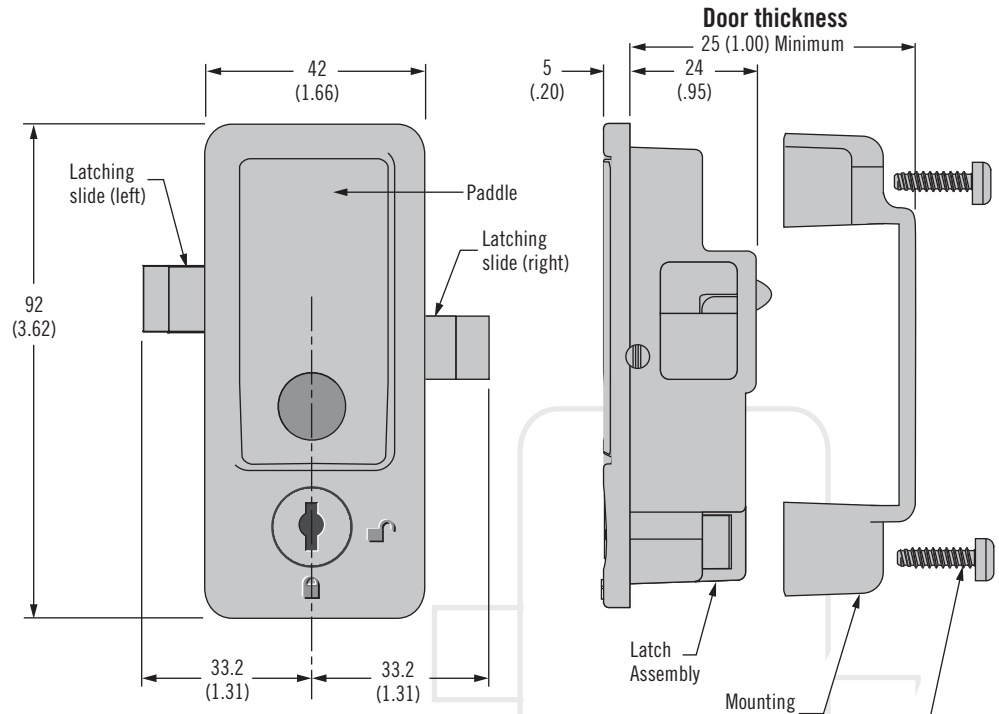

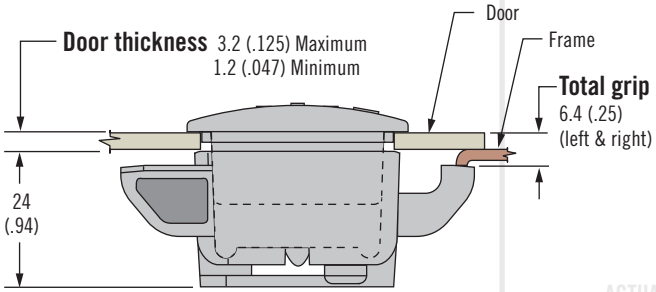

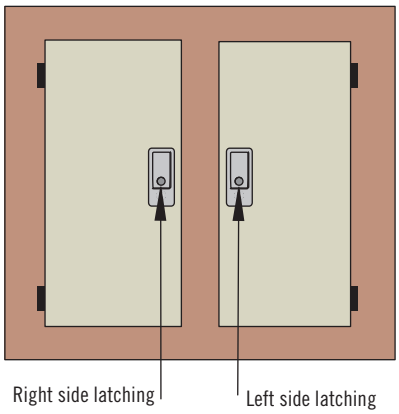

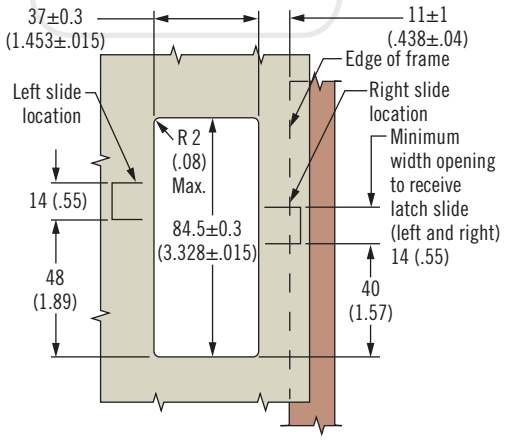

Part Number (2 Flat Keys Supplied)	
Right side latching	M1-2F-1-25
Dual side latching	M1-2F-2-25
Left side latching	M1-2F-3-25

Dimensions in millimeters (inch) unless otherwise stated

M1 Push-to-Close Latch

Lift-to-open · Flush

Mounting Cup

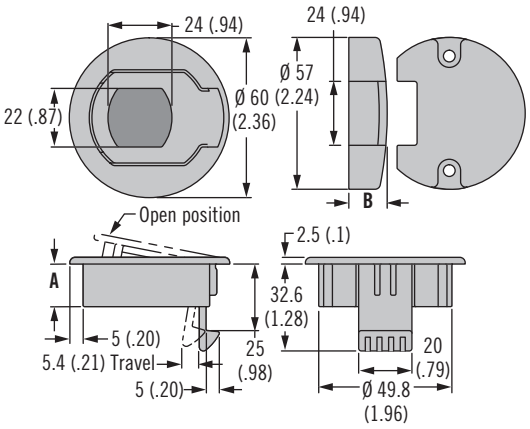

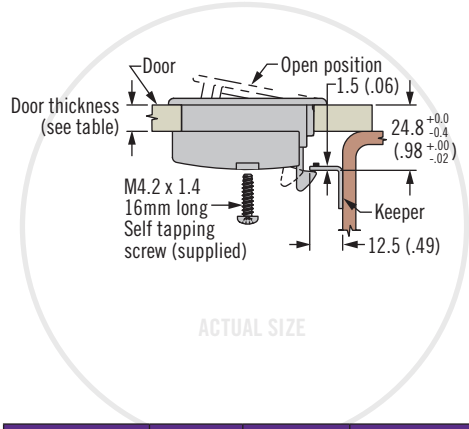

Door Thickness Range	A	B	Part Number
1 - 7 (.04 - .28)	16 (.63)	20.4 (.80)	M1-81
7 - 13 (.28 - .51)	16 (.63)	14.3 (.57)	M1-82
13 - 19 (.51) - .75)	22 (.87)	14.3 (.57)	M1-83

- **Low profile**
- **Non-corrosive and non-conductive**

Material and Finish

Latch: Acetal, black
Mounting hardware: Stainless steel

www.southco.com/M1

80 Push-to-Close Latch

Push-to-open · Snap-in

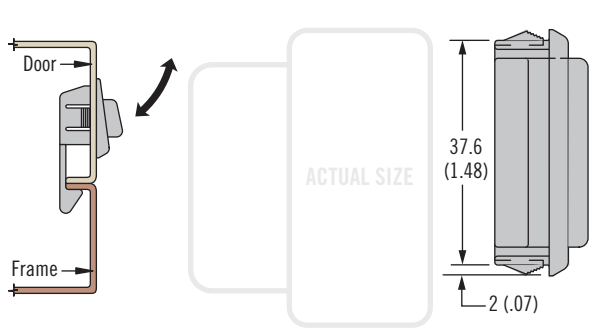

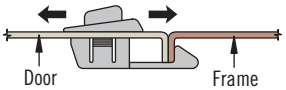

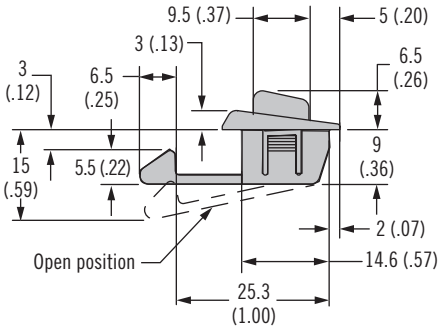

Colour	Part Number
White	80-201
Black	80-202

- **Snap-in installation**
- **Non-corrosive and non-conductive**
- **Suitable for sliding or hinged doors**

Material and Finish

Acetal, black or white

www.southco.com/80

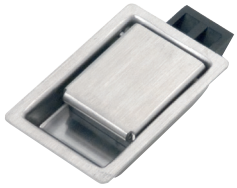

64 Push-to-Close Latch

Pull-to-open · Paddle latch · Miniature

- **Single hole installation**
- **Concealed mounting**
- **Plastic slide**

Material and Finish

Stainless steel, passivated and brushed finish and glass-filled reinforced nylon, black

Performance Details

Max. working load: 90 N (20 lbf)

Operating temperature range: -18°C (0°F) to 100°C (210°F)

Flammability rating: UL94-V0

Installation Notes

Maximum tightening torque on mounting screws: 0.9 N·m (8 in·lbf)

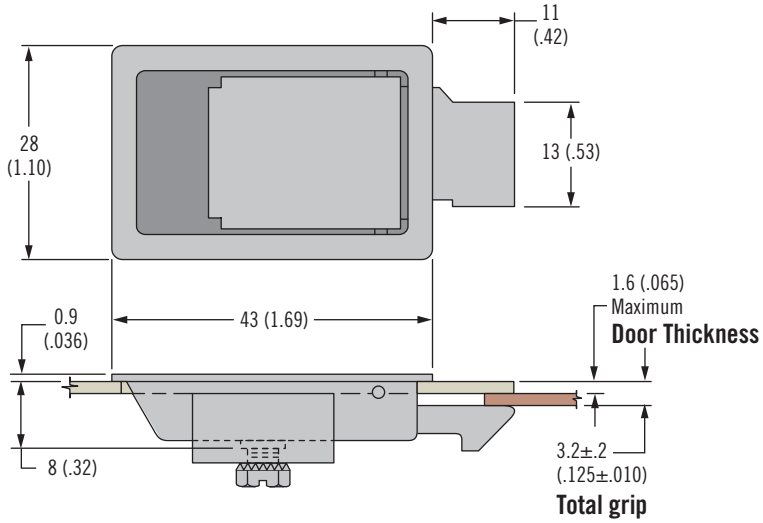

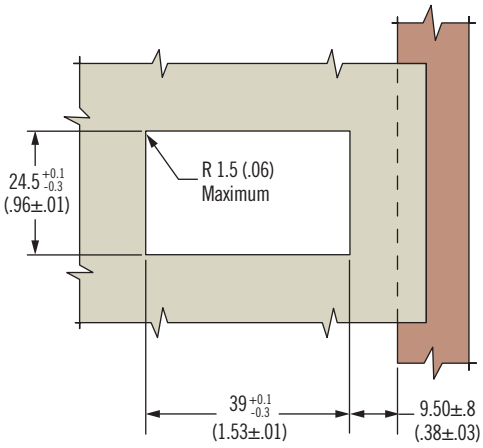

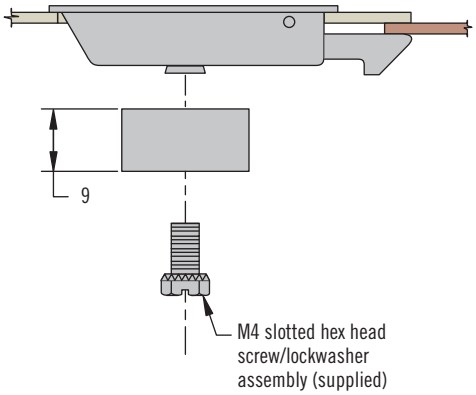

Part Number

See table

Part Number
64-01-10

Dimensions in millimeters (inch) unless otherwise stated

64 Push-to-Close Latch

Pull-to-open · Paddle latch · Small

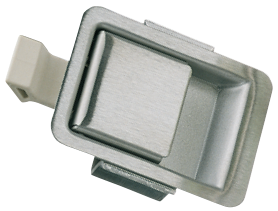

- Single hole installation
- Concealed mounting
- Plastic slide

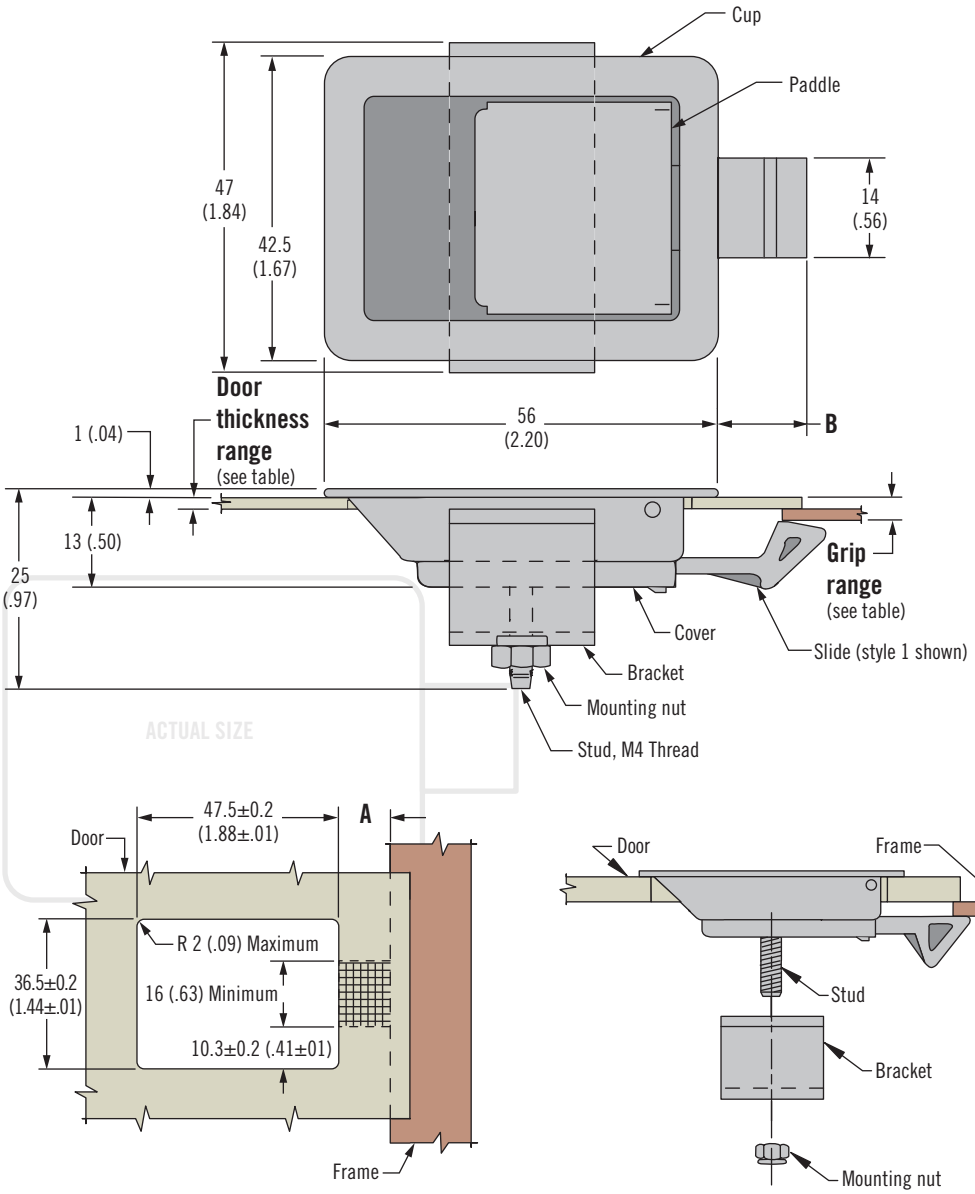

Grip Range		Slide Style	A		B	T (See Notes)	Part Number Brushed Finish			
							Door Thickness Range			
Min.	Max.		Min.	Max.			3.7 (.144) Maximum	3.9 - 7.3 (.154 - .288)	11.1 - 14.6 (.437 - .576)	18.6 - 22 (.734 - .868)
1.2 (.05)	2 (.08)	1	10.4 (.41)	12.7 (.50)	12.4 (.49)	1.6 (.063)	64-10-111-50	~	~	~
2.8 (.11)	3.6 (.14)	3	11.9 (.47)	14.2 (.56)	14.2 (.56)	3.2 (.125)	64-10-113-50	64-10-133-50	~	~
6 (.23)	6.7 (.27)	4				6.4 (.250)	64-10-124-50	64-10-114-50	~	~
12.3 (.48)	13.1 (.52)	5				7.1 (.281)	64-10-125-50	64-10-135-50	64-10-115-50	64-10-115-50
18.6 (.73)	19.4 (.77)	6				7.1 (.281)	64-10-126-50	~	64-10-116-50	64-10-116-50

Material and Finish

Stainless steel, passivated and brushed or black powder coated and glass-filled reinforced nylon, natural

Performance Details

Max. working load:

Style	Max. Static Load N
1	130 (30)
2	110 (25)
3	90 (20)
4	70 (15)
5	55 (12)

Operating temperature range: -18°C (0°F) to 100°C (210°F)

Flammability rating: UL94-V0

Installation Notes

Door thickness must not exceed **T** dimension (see table) in area through which slide will operate. It may be necessary to reduce thickness of door in area indicated by grid.

Slide styles:

Style 3

Style 4

Style 5

Style 6

Notes

For an assembly with black powder coated finish change last digit from 0 to 5 - Example: 64-10-111-55

64 Push-to-Close Latch

Pull-to-open · Paddle latch · Small

- **Single hole installation**
- **Concealed mounting**
- **Metal slide**

Material and Finish

Stainless steel passivated and brushed or black powder coated, steel, chrome plated

Performance Details

Max. working load: 222 N (50 lbf)

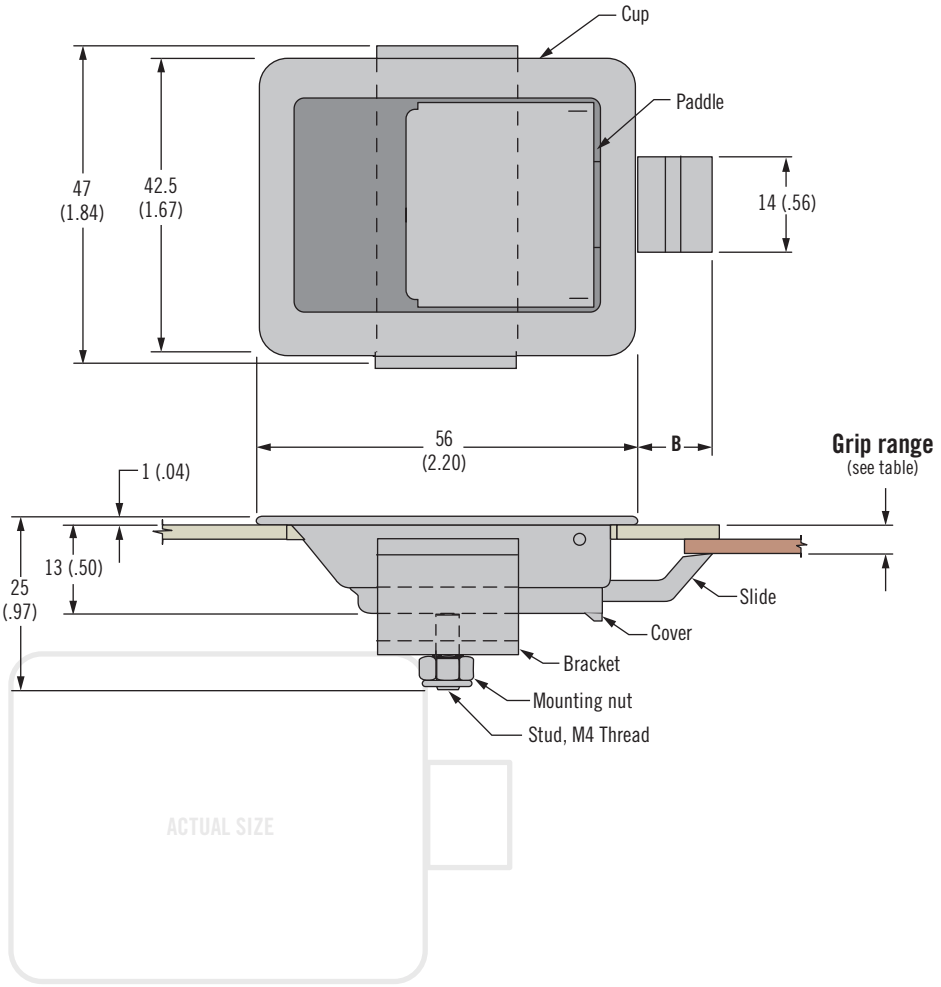

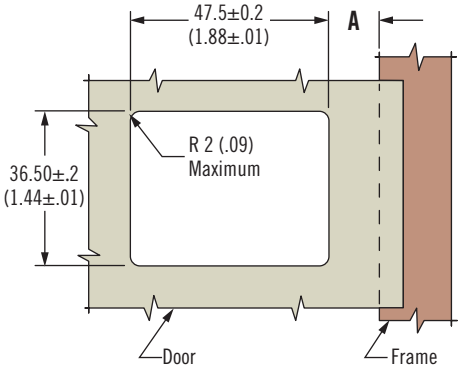

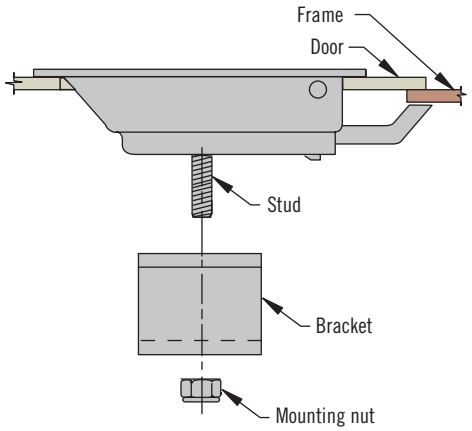

Part Number

See table

Grip Range		Part Number		A		B
Min.	Max.	Stainless Steel, Brushed	Stainless Steel Black Powder coated	Min.	Max.	
1.2 (.05)	2 (.08)	64-11-10	64-11-12	10.4 (.41)	12.7 (.50)	11.5 (.45)
2 (.08)	2.8 (.11)	64-11-20	64-11-22	11.2 (.44)	13.5 (.53)	11.9 (.47)
2.8 (.11)	3.6 (.14)	64-11-30	64-11-32	11.9 (.47)	14.2 (.56)	12 (.48)

Dimensions in millimeters (inch) unless otherwise stated

64 Push-to-Close Latch

Pull-to-open · Paddle latch · Medium

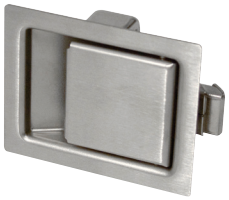

- **Single hole installation**
- **Concealed mounting**
- **Metal slide**

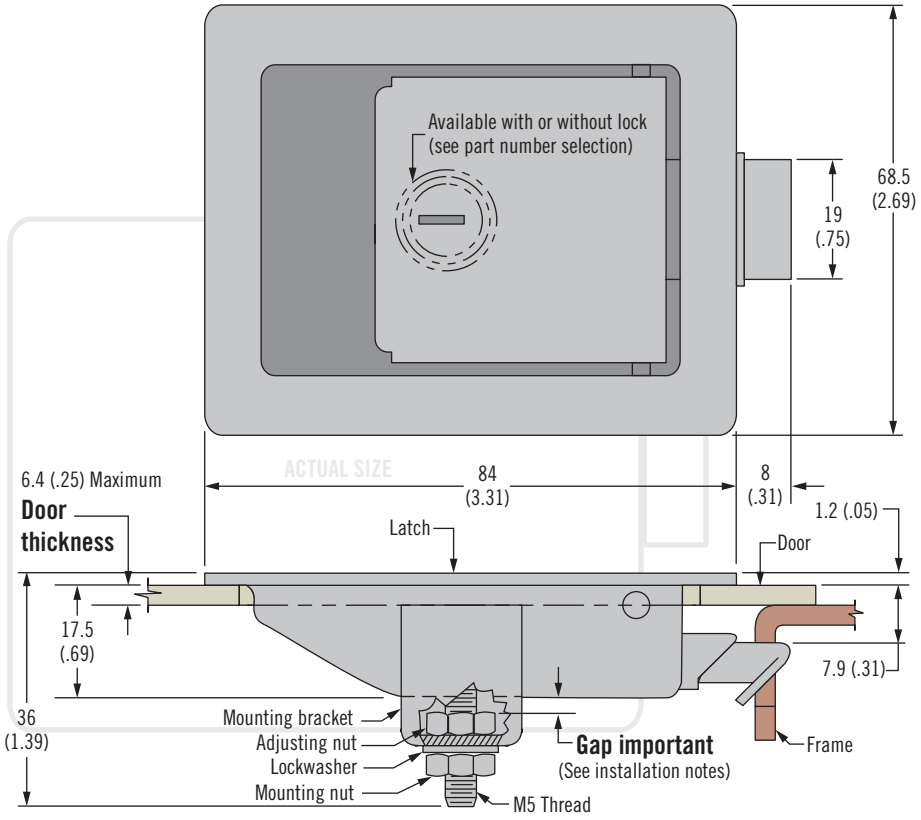

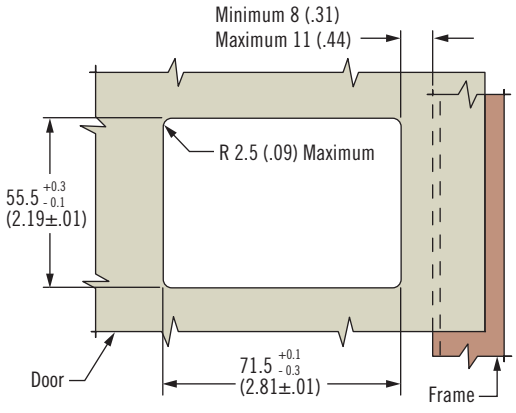

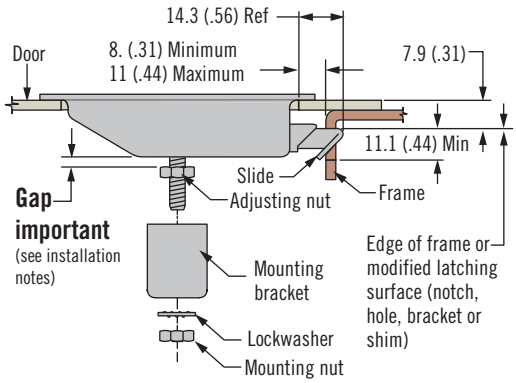

Material and Finish

Stainless steel brushed, steel, zinc plated or steel, black powder coated or silver

Performance Details

Max. working load: 570 N (125 lbf)

Installation Notes

Measure your door thickness and set adjusting nut so that GAP is equal to door thickness within plus 0.8 (.03), minus 0.0. (.00)

Accessories

Flat key, keyed alike H571
(2 keys per ring)
Part number: 64-0-33578

Part Number Selection

64 - 2 L - 1 M

L **Lock style**
- **1** Non-locking
- **2** Key-locking keyed alike H571 (2 Flat keys supplied)

M **Material**
- **0** Stainless steel, brushed
- **1** Steel, black powder coated
- **3** Steel, zinc plated
- **5** Steel, powder coated silver

64 Push-to-Close Latch

Pull-to-open · Paddle latch · Large

- **Single hole installation**
- **Concealed mounting**
- **Metal slide**

Material and Finish

Stainless steel, brushed, steel, zinc plated or steel, black powder coated

Performance Details

Max. working load: 1110 N (250 lbf)

Installation Notes

Measure your door thickness and set adjusting nut so that GAP is equal to door thickness within plus 0.8 (.03), minus 0.0 (.00)

Accessories

Flat key, keyed alike CH751
(2 keys per ring)
Part number: PK-10-01

Overmoulded key, keyed alike CH751
(2 keys per ring)
Part number: PK-10-01-05

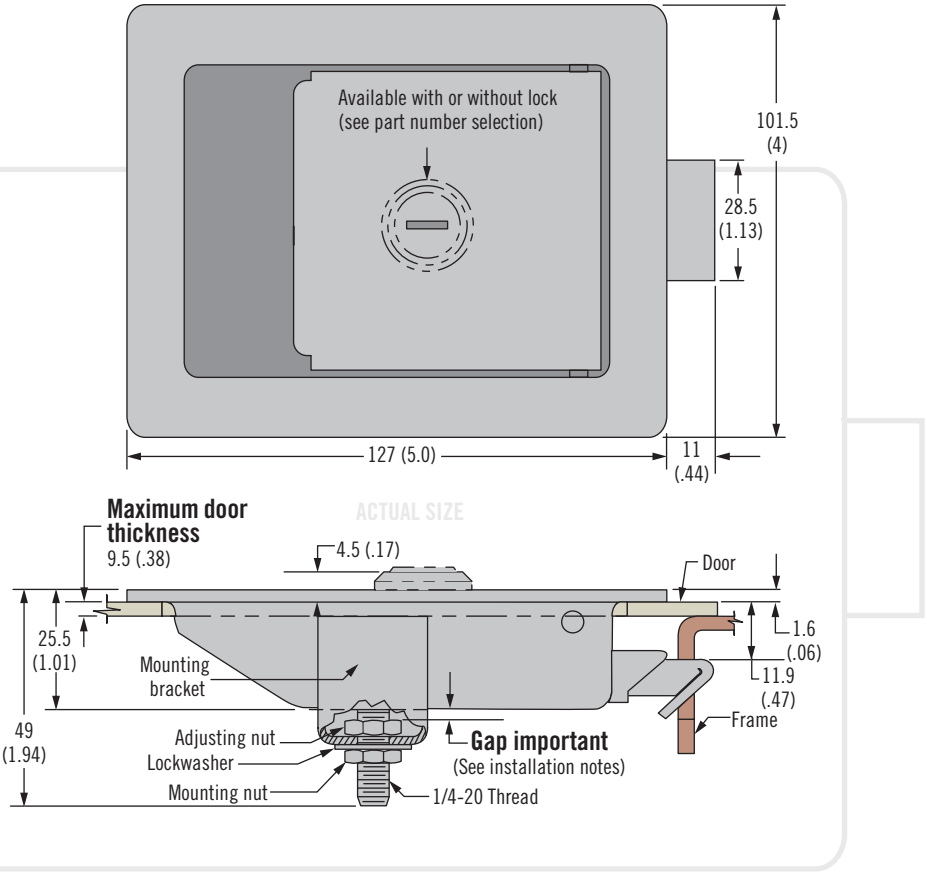

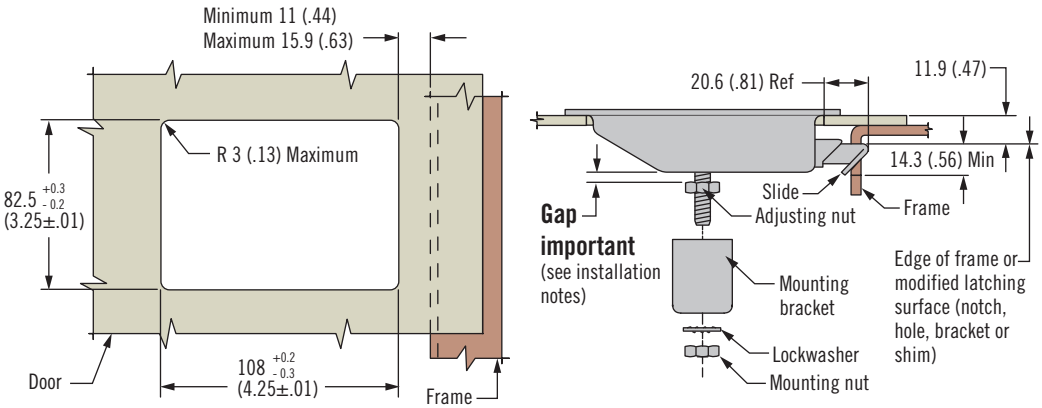

Part Number Selection

64 - 10 - 30 [L] - [M] 0

[M] **Material**
- **4** Steel, zinc plated
- **5** Stainless steel brushed
- **9** Steel, black powder coated

[L] **Lock style**
- **1** Non-locking
- **2** Key-locking keyed alike CH751 (2 Flat keys supplied)

Dimensions in millimeters (inch) unless otherwise stated

southco®

64 Push-to-Close Latch

Pull-to-open · Paddle latch · Large

- **Single hole installation**
- **Multiple mounting styles**
- **Inside actuation in locked or unlocked position**

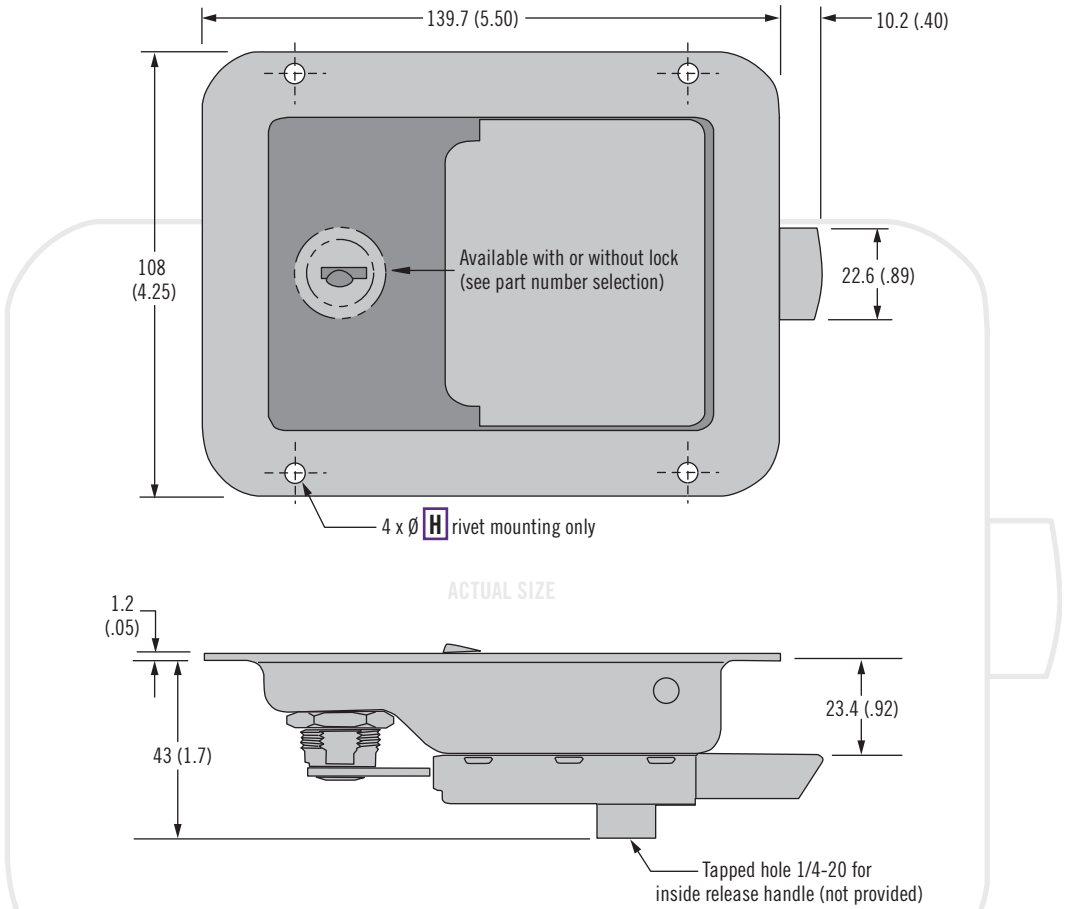

Material and Finish

Stainless steel, polished, steel, zinc plated or steel, black powder coated

Slide bolt and lock assembly: Zinc plated or powder coated

Performance Details

Max. working load: 560 N (125 lbf)

Accessories

Flat key, keyed alike CH751
(2 keys per ring)
Part number: PK-10-01

Overmoulded key, keyed alike CH751
(2 keys per ring)
Part number: PK-10-01-05

Part Number Selection

64 - 50 - 4 L H - M

M Material
- **10** Steel, zinc plated
- **20** Stainless steel polished
- **50** Steel, black powder coated

L Lock style
- **0** Non-locking
- **1** Key-locking keyed alike CH751 (2 Flat keys supplied)

H Housing
- **0** Weld
- **1** Rivet through hole 4.9 (.19)
- **2** Rivet through hole 5.2 (.20)

Dimensions in millimeters (inch) unless otherwise stated

64 Push-to-Close Latch

Pull-to-open · Paddle latch · Heavy-duty pivot

- **Robust design resists binding from dirt and debris**
- **Multiple mounting styles**

Material and Finish

Steel, zinc plated or black powder coated

Slide bolt and lock assembly: Zinc plated or powder coated

Performance Details

Max. working load: 2700 N (607 lbf)

Accessories

Flat key, keyed alike 14603 (2 keys per ring)
Part number: PK-10-01-14603

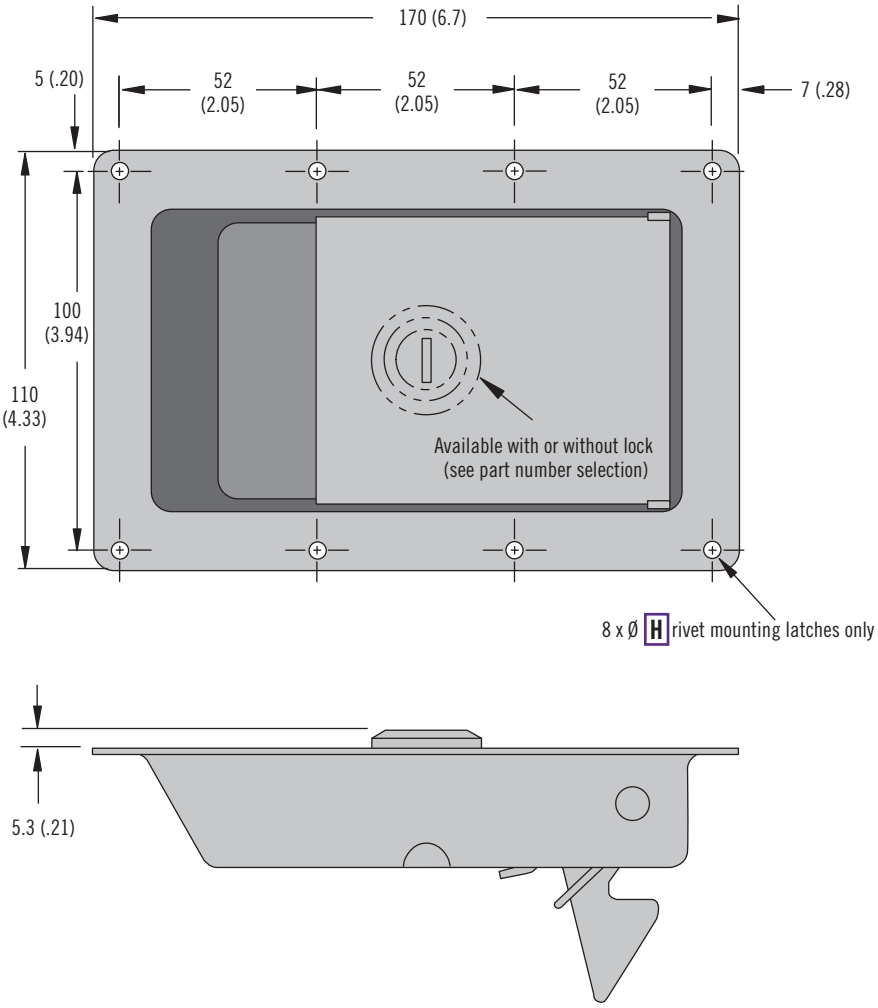

Part Number Selection

64 - 60 - 5 L H - M

M Material
10 Steel, zinc plated
50 Steel, black powder coated

L Lock style
0 Non-locking
1 Key-locking keyed alike 14603 (2 Flat keys supplied)

H Housing
0 Weld
1 Rivet through hole 4.9 (.19)
2 Rivet through hole 5.2 (.20)

Dimensions in millimeters (inch) unless otherwise stated

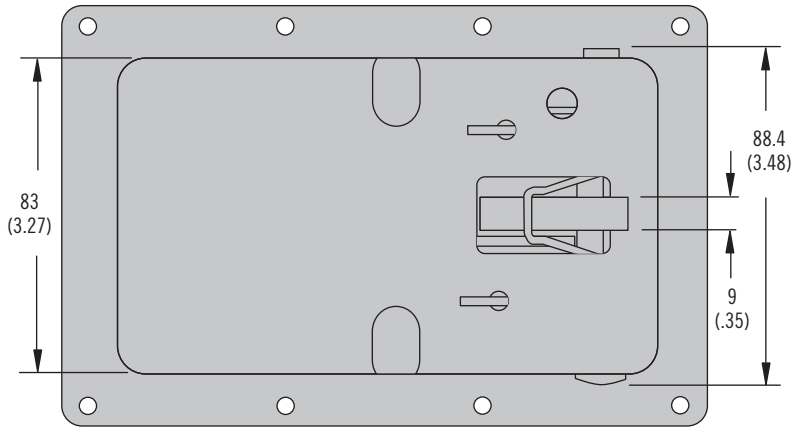

ACTUAL SIZE

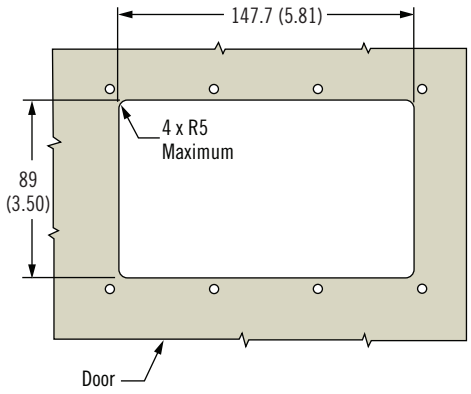

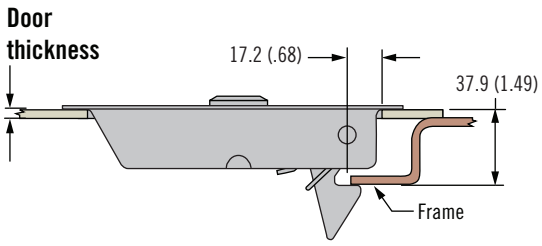

Dimensions in millimeters (inch) unless otherwise stated

ROTARY LATCH SYSTEMS

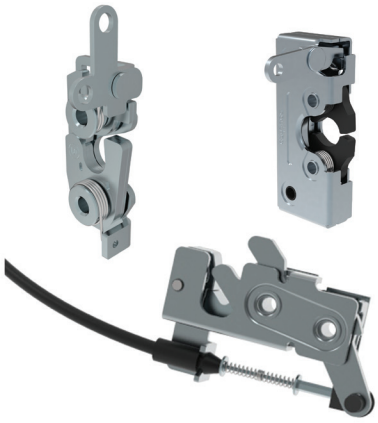

Southco's Rotary Latch Systems have three distinct components: Rotary Latch, Cable and Actuator. Southco uses these three components to enable remote or manual actuation to suit a variety of applications.

ROTARY LATCHES Pages 290 - 307

Holds the panel secure and provides the strength for the system

- Electronic and mechanical access options
- Rugged steel construction to meet high strength needs
- Stainless steel versions offer maximum corrosion resistance
- Heavy-duty styles comply with FMVSS standards
- Two-stage engagement for added protection against false latching

R4-05

R4-10

R4-20

R4-30

R4-50

R4-EM's see page 20 for options

ROTARY LATCH ACTUATORS Pages 308 - 320

The touch point that determines the level of system security

- Key lock, electronic and pneumatic release
- Single point and multi-point actuation
- Multiple actuation styles including push button, pull handle and squeeze to open
- Cable splitter available for added actuation points and timed release

AC-10

AC-15

AC-30

AC-40

AC-50

AC-75

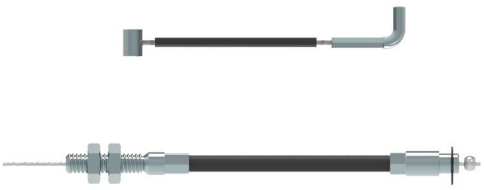

ROTARY LATCH CABLES & MOUNTING HARDWARE Pages 322 - 323

Connects the latch to the actuator for remote release

- Enable remote operation and flexible actuator placement
- Mounting hardware to support installation flexibility

ROTARY LATCH

Southco offers a variety of rotary latches that feature secure latching and simple push-to-close operation. These concealed latches mount inside the enclosure to hide latch points, improving security and industrial design.

- Mechanical and electronic latching mechanisms available
- Variety of sizes to suit application strength requirements
- Multiple material and finish options to meet environmental needs
- FMVSS-compliant versions; two-stage actuation

Single Rotor

Double Rotor

Single Stage

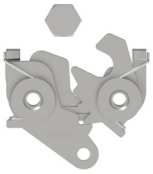

Unlatched Position

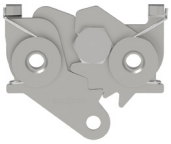

Fully Latched Position

Two Stage

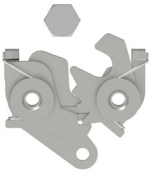

Unlatched Position

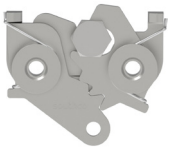

Secondary Latched Position

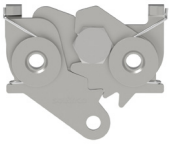

Fully Latched Position

ROTARY ACTUATOR

Southco offers a wide variety of actuator options that improve ergonomic operation and provide a convenient handgrip for opening a door or panel, including slide, push-to-open, squeeze and pull-handle styles.

Flush / Low Profile Mount

Improves industrial design and limits potential snag points

Surface Mount

Minimizes interior protrusion, reducing internal footprint

Key Locking

Mechanical access control solutions

Electronic Actuators

Combines with mechanical latches for electronic access control

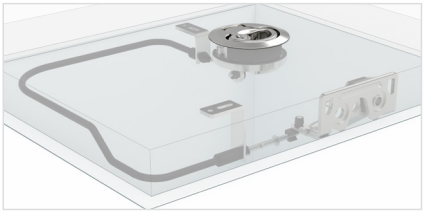

Single-Point

When only one latching point is required in the application

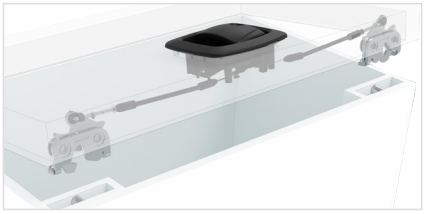

Multi-Point

When more than one latching point is required in the application

ROTARY LATCH CABLE AND HARDWARE

Choosing cables and mounting hardware is the last step in designing a complete Rotary Latching System. Cables are available in various options to suit specific application requirements.

Straight Line of Sight

When cable is routing in a direct pull line with no bends or concerns for accidental opening

Cable Type 1

Cable Type 2

Protected Cable Routing

When cable routing requires bending, cable management brackets, spring assist or to protect against accidental opening

Cable Type 4

Cable Type 5

Cable Type 6

Cable Type 7

Cable Mounting Bracket and Retainer Clip

Rotary Latch Systems

Selection guide · Rotary latches

Rotary Latches		Product Family	Maximum Working Load Rating	Single or Double Rotor	Single or Two Stage	Materials	Features	Applications	Industries	Page
Non-FMVSS Capable		R4-05	Light-duty	Single rotor	Single and two stage	Steel and stainless steel	Symmetrical design, light weight latching for extremely limited space and weight constraints, vibration damper option	Engine covers, baggage doors, access panels, tool boxes, gaming equipment	Off-Highway, Truck, Bus, Marine, Specialty Vehicle, Self-Service	290
		R4-10	Light-duty	Single rotor	Single and two stage	Steel and stainless steel	Light weight latching for significant space and weight limitations, vibration damper option, dual lever and cable bracket styles	Engine covers, baggage doors, access panels, tool boxes	Off-Highway, Truck, Bus, Marine, Specialty Vehicle, Self-Service	292
		R4-20	Medium-duty	Single rotor	Single and two stage	Steel and stainless steel	Medium strength for rugged performance, significant tolerance for latch to striker misalignment	Engine covers, baggage doors, access panels, tool boxes	Off-Highway, Truck, Bus, Marine, Rail	298
		R4-75	Medium-duty	Single rotor	Two stage	Steel	External rotor, concealed rotary mechanism protects against dirt and debris exposure, flexible mounting	Engine covers, baggage doors, access panels, tool boxes	Off-Highway, Truck, Bus, RV, Rail	299
FMVSS Capable Options		R4-30	Heavy-duty	Single rotor	Single and two stage	Steel and stainless steel	High strength, significant tolerance for latch to striker misalignment, dual lever styles, FMVSS 206 compliant option	Entry doors, engine covers, baggage doors, large access panels	Off-Highway, Truck, Industrial Machinery, Self-Service	300
		R4-50	Heavy-duty	Double rotor	Two stage	Steel	Maximum strength, significant tolerance for latch to striker misalignment, FMVSS 206 compliant	Entry doors, engine covers, baggage doors, large access panels	Off-Highway, Truck, Bus, Rail, Automotive	304
All-in-one Rotary Latch and Actuator Solutions		R4-81	Light-duty	Single rotor	Single and two stage	Glass-filled nylon, Zinc alloy, Steel	Combination R4-10 rotary latch with paddle actuator, vibration damper option, stylized paddle in polished chrome or black powder coat, stud mounting	Storage compartments, baggage doors, large access panels, engine covers	Off-Highway, Truck, RV, Bus, Rail, Specialty Vehicle	306
		R4-82	Light-duty	Single rotor	Single and two stage	Steel	Combination R4-10 rotary latch with heavy duty paddle actuator, integrated vibration damper, zinc or black powder coat finish, through hole or stud mounting	Storage compartments, baggage doors, large access panels, engine covers	Off-Highway, Truck, RV, Bus, Rail, Industrial Machinery, Specialty Vehicle	307

Rotary Latch Systems

Selection guide · Rotary latch actuators

Actuators		Product Family	Description	Sealed /Non-Sealed	Locking /Non-Locking	Recommended Rotary Latch	Page
Single Point		AC-50	Surface mount squeeze handle	Non-sealed	Non-locking	All	318
		AC-60	Surface mount T-handle	Non-sealed	Non-locking	R4-05, R4-10, R4-20, R4-30	316
		AC-70	Flush mount plastic finger pull	Non-sealed	Non-locking	R4-05, R4-10, R4-20, R4-30	316
		AC-75	Flush mount aluminum finger pull	Non-sealed	Non-locking	R4-05, R4-10, R4-20, R4-30	317
		AC-80	Low profile mount light duty push button	Non-sealed	Non-locking	R4-05, R4-10, R4-20, R4-30	317
		AC-M1	Flush mount heavy duty finger pull	Non-sealed	Non-locking/locking	R4-05, R4-10, R4-20, R4-30	319
Multi-Point		AC-05	Surface mount cable Splitter	Non-sealed	Non-locking	All	321
		AC-10	Flush mount handle pull	Sealed	Non-locking/locking	All	310
		AC-10-EM	Flush mount handle pull with electronic locking	Sealed	Locking	All	310
		AC-11	Flush mount handle pull	Sealed	Non-locking/locking	All	311
		AC-11-EM	Flush mount handle pull with electronic locking	Sealed	Locking	All	311
		AC-15	Surface mount handle pull	Sealed	Non-locking/locking	All	312
		AC-20	Low profile mount large paddle pull	Sealed	Locking	All	308
		AC-30	Surface mount large push button	Sealed	Non-locking/locking	All	314
		AC-40	Surface mount large push button	Sealed	Non-locking/locking	All	315
		R3-20	Low profile mount large paddle pull with slide pawl	Sealed	Non-locking/locking	All	272
		R3-22	Low profile mount large paddle pull	Sealed	Non-locking/locking	All	309
		64-40	Flush mount large paddle pull	Non-sealed	Non-locking/locking	All	320

R4 Rotary Latch

Light-Duty · Concealed · Single and two stage

- **Ideal for space limited applications**
- **Compatible with wide array of actuators**
- **Integrated bumper for anti-vibration feature**

Material and Finish

Steel, zinc or zinc nickel plated or 304 stainless steel, passivated

Accessories

Cables and retainer clips
see pages 322-323

Notes

Electromechanical rotary latch available see page 20

For electrical actuation option see page 42

Hand Actuation

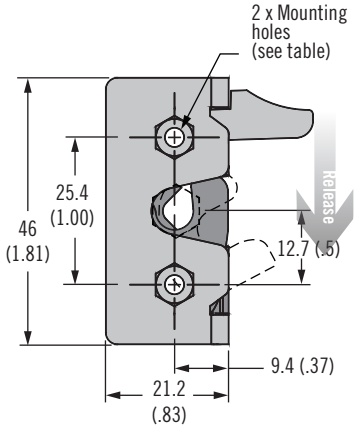

Direct Actuation

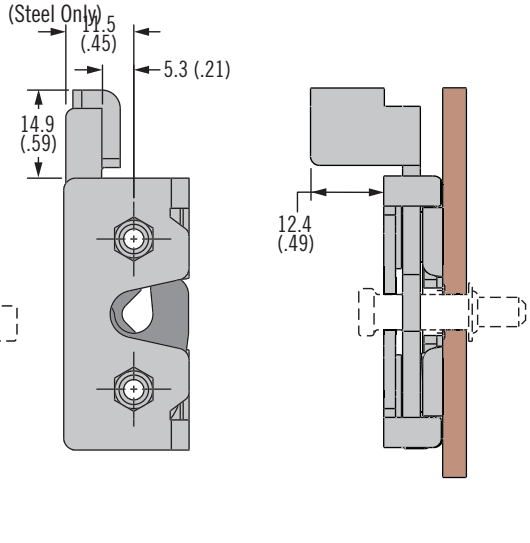

Bottom Actuation

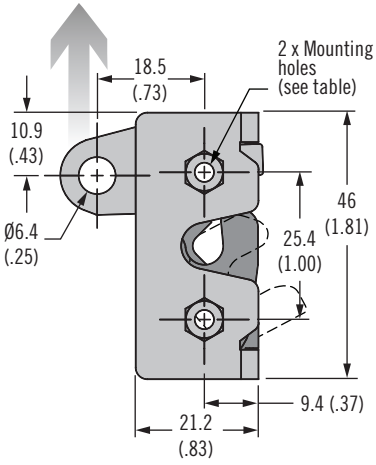

Mounting Bracket

(Option for all Lever Types in Steel)

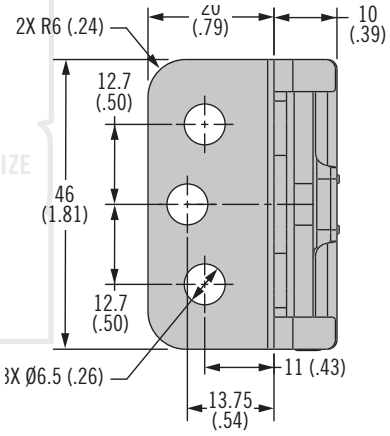

Part Number Selection

S Stage & Actuation
- **2** Single stage
- **4** Two stage

L Lever Type
- **4** Hand Actuation
- **5** Bottom Actuation
- **9A** Direct Actuation (M = 10, 15, and 77 material only)

R4 - 05 - S I - L 0 B - M

I Mounting Style
- **0** 4.5 (.177) thru
- **1** 8-32 thread
- **2** M4 x 0.7 thread
- **3** 4.5 (.177) thru with Mounting Bracket (M = 10, 15, and 77 material only)

B Base style
- **1** Standard
- **5** Integrated bumper version

M Material
- **10** Steel, Zinc Plate
- **15** Steel, Black Zinc Nickel
- **20** Stainless Steel
- **77** Steel, Zinc Nickel

Dimensions in millimeters (inch) unless otherwise stated

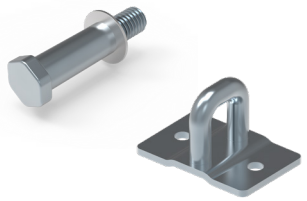

Striker Bolt
(sold separately)

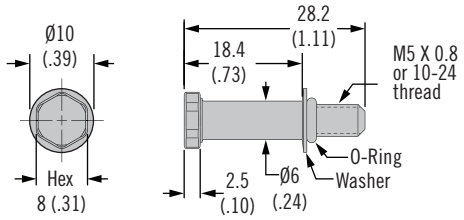

Striker Bolt Part Number		
Part Number	**Thread**	**Material**
R4-90-0511-10	10-24-UNC	Steel
R4-90-0511-20	10-24-UNC	Stainless Steel
R4-90-0521-10	M5 X 0.8	Steel
R4-90-0521-20	M5 X 0.8	Stainless Steel

Molded Striker
(sold separately)

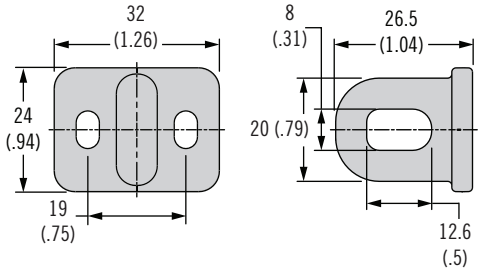

Part Number	
Molded striker	R4-0-61336

Wire Form Strikers
(sold separately)

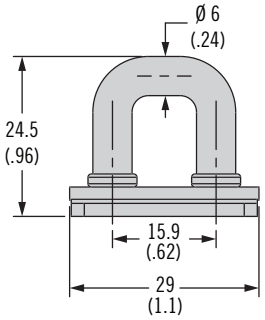

Single Hole Mount
R4-90-0501-XX

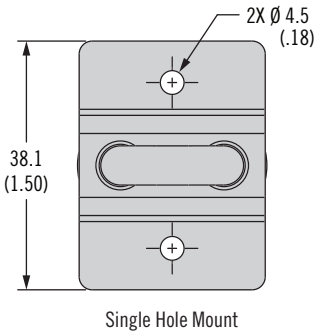

Single Hole Mount

Slot Mount
R4-90-0502-XX

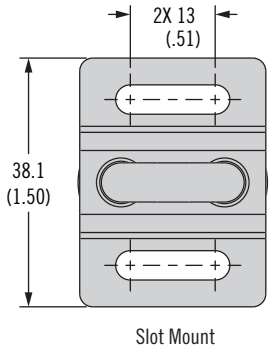

Slot Mount

Wire Form Strikers		
Part Number	**Mount**	**Material**
R4-90-0501-10	Single Hole	Steel, Zinc Plated
R4-90-0501-15	Single Hole	Steel, Black Zinc Nickel
R4-90-0501-77	Single Hole	Steel, Zinc Nickel
R4-90-0502-10	Slot	Steel, Zinc Plated
R4-90-0502-15	Slot	Steel, Black Zinc Nickel
R4-90-0502-77	Slot	Steel, Zinc Nickel

- **Strikers for R4-05 series rotary latch**

Material and Finish
Steel, zinc nickel, zinc plated, black zinc nickel, Stainless Steel

Part Number
See tables

R4 Rotary Latch

Light-Duty · Concealed · Single and two stage

- **Compatible with wide array of actuators**
- **EN 45545-3 E60 Compliant (Standard version only)**
- **Integrated bumper version for anti-vibration feature**

Material and Finish

Steel, zinc plated or
304 stainless steel, passivated

Accessories

Striker bolts for standard version and integrated bumper version are different. See page 297 for both versions.

Cables and retainer clips
see pages 322-323

Notes

Electromechanical rotary latch available see page 20

Single Stage - Perpendicular (left hand actuation shown)

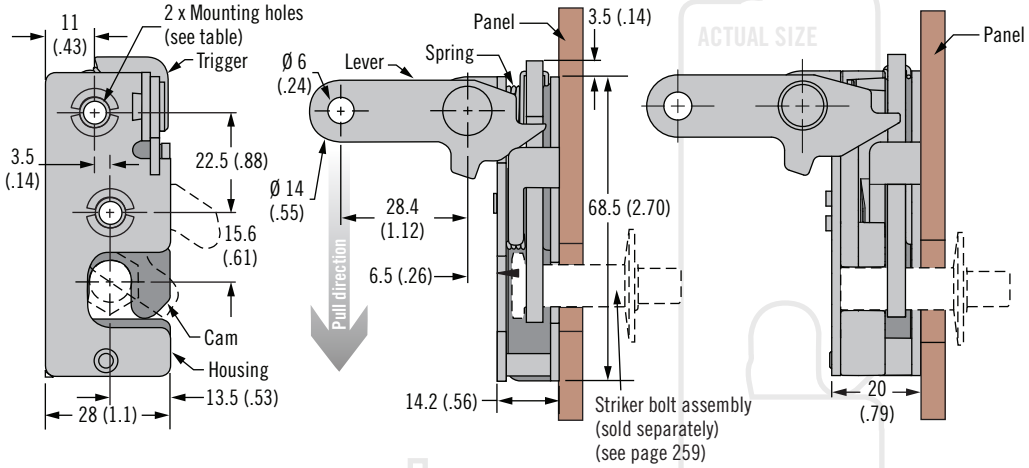

Integrated Bumper Version

(dimensions same as standard version except as shown)

Single Stage - In-Line (left hand actuation shown)

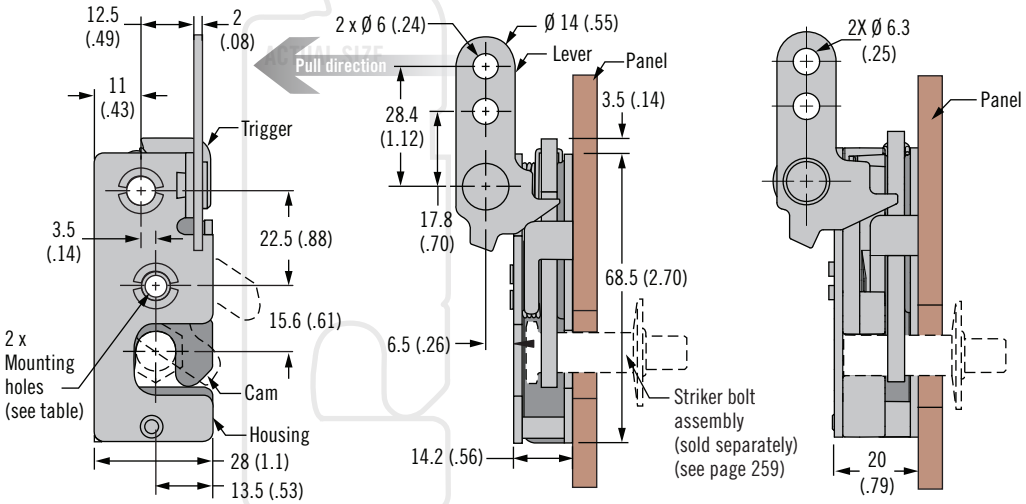

Integrated Bumper Version

(dimensions same as standard version except as shown)

Part Number Selection

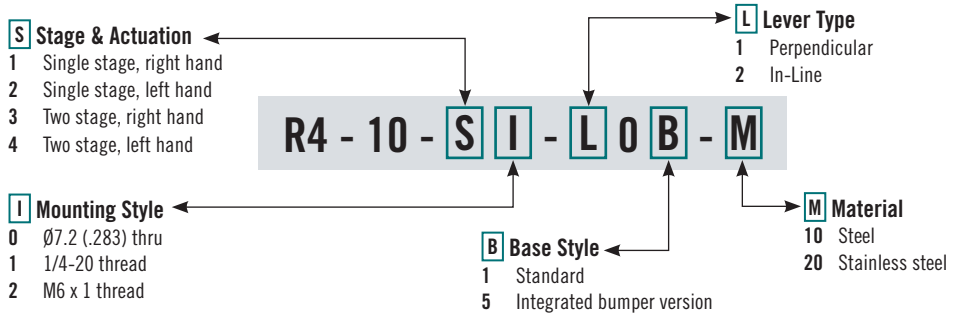

Dimensions in millimeters (inch) unless otherwise stated

R4 Rotary Latch

Light-Duty · Concealed · Single and two stage

- **Compatible with wide array of actuators**
- **EN 45545-3 E60 Compliant (Standard version only)**
- **Integrated bumper version for anti-vibration feature**

Single Stage - Two Point (left hand actuation shown)

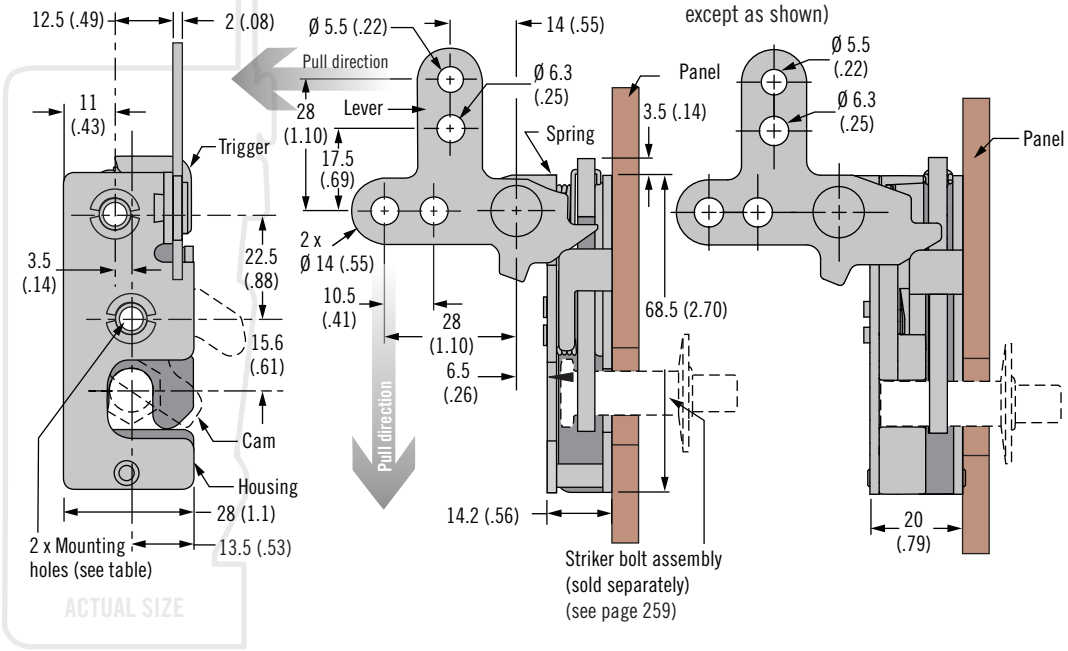

Integrated Bumper Version

(dimensions same as standard version except as shown)

Single Stage - Hand Actuation

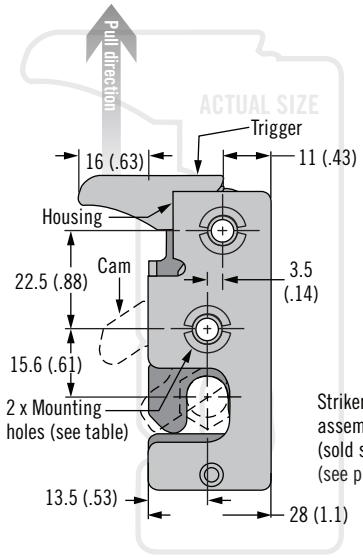

Integrated Bumper Version

(dimensions same as standard version except as shown)

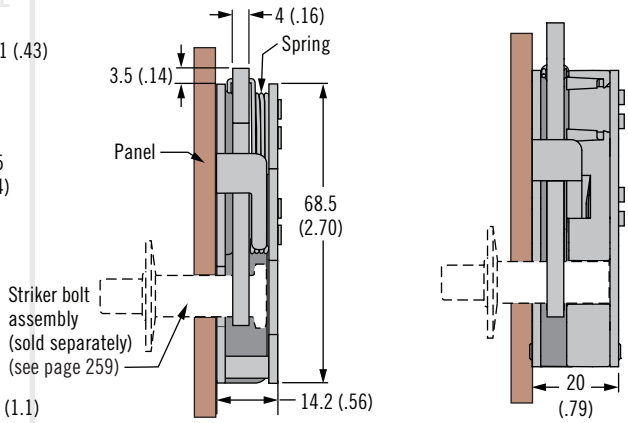

Material and Finish

Steel, zinc plated or
304 stainless steel, passivated

Accessories

Striker bolts for standard version and integrated bumper version are different. See page 297 for both versions.

Cables and retainer clips
see page 322-323

Notes

Electromechanical rotary latch available see page 20

Part Number Selection

S Stage & Actuation
- 1 Single stage, right hand
- 2 Single stage, left hand
- 3 Two stage, right hand
- 4 Two stage, left hand

L Lever Type
- 3 Two point
- 4 Hand actuation

R4 - 10 - S I - L 0 B - M

I Mounting Style
- 0 Ø7.2 (.283) thru
- 1 1/4-20 thread
- 2 M6 x 1 thread

B Base Style
- 1 Standard
- 5 Integrated bumper version

M Material
- 10 Steel
- 20 Stainless steel

R4 Rotary Latch

Light-Duty · Concealed · Single and two stage

- **Compatible with wide array of actuators**
- **EN 45545-3 E60 Compliant (Standard version only)**
- **Integrated bumper version for anti-vibration feature**

Material and Finish

Steel, zinc plated or
304 stainless steel, passivated

Accessories

Striker bolts for standard version and integrated bumper version are different. See page 297 for both versions.

Cables and retainer clips
see pages 322-323

Notes

Electromechanical rotary latch available see page 20

For electrical actuation option see page 43

Single Stage - Bottom

(left hand actuation shown)

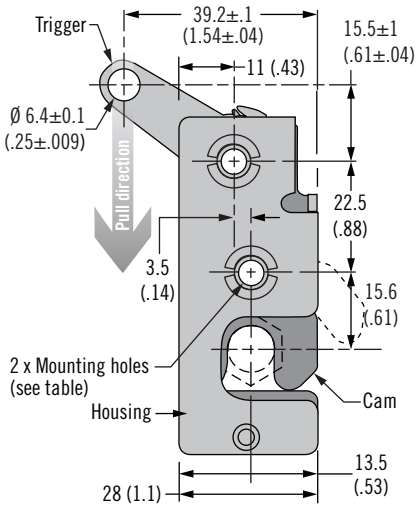

Integrated Bumper Version

(dimensions same as standard version except as shown)

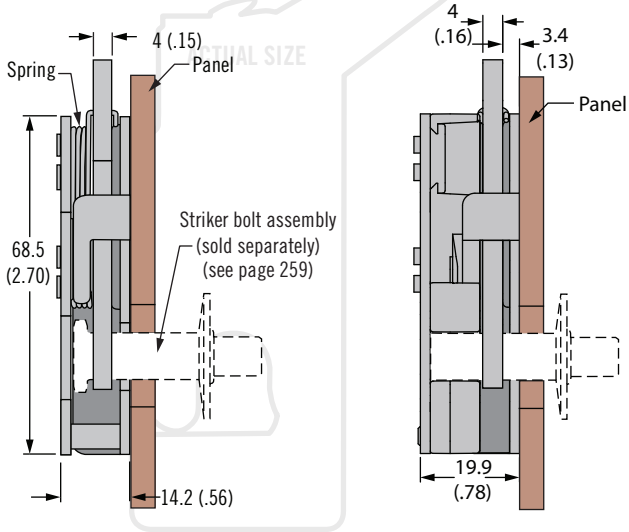

Single Stage - Bottom with Cable Bracket

(Right hand actuation shown)

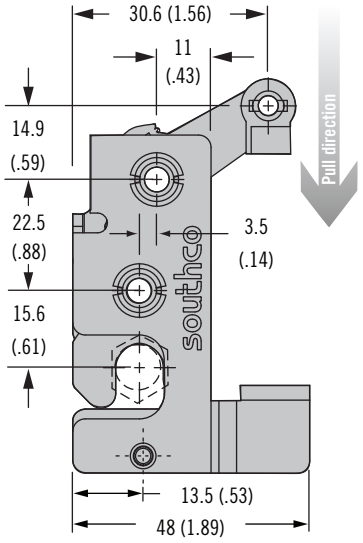

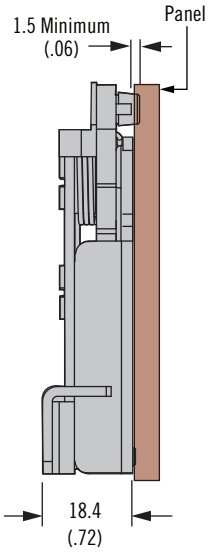

Integrated Bumper Version

(dimensions same as standard version except as shown)

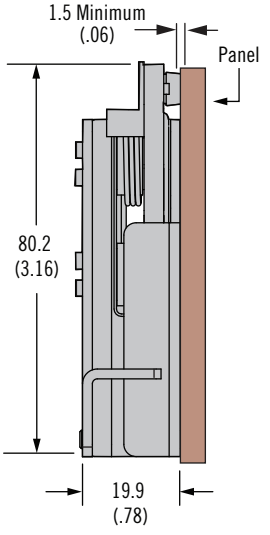

Part Number Selection

R4 - 10 - S I - 5 0 B - M

S Stage & Actuation
- 1 Single stage, right hand
- 2 Single stage, left hand
- 3 Two stage, right hand
- 4 Two stage, left hand

I Mounting Style
- 0 Ø7.2 (.283) thru
- 1 1/4-20 thread
- 2 M6 x 1 thread

B Base Style
- 1 Standard
- 2 Standard with cable bracket
- 5 Integrated bumper
- 6 Integrated bumper with cable bracket

M Material
- 10 Steel
- 20 Stainless steel

Dimensions in millimeters (inch) unless otherwise stated

R4 Rotary Latch

Light-Duty · Concealed · Single and two stage

Single Stage - Top

(left hand actuation shown)

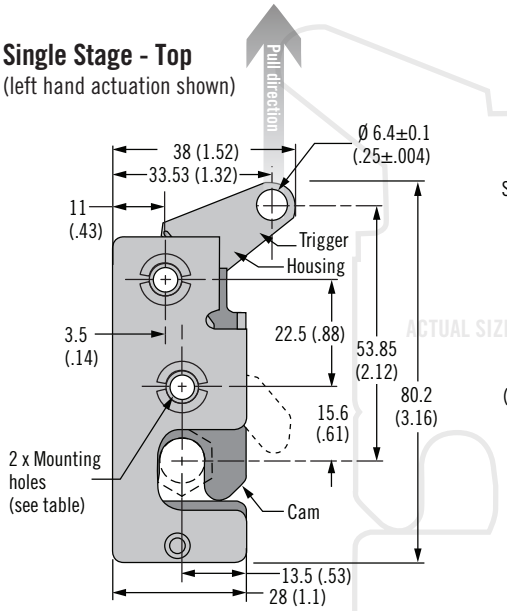

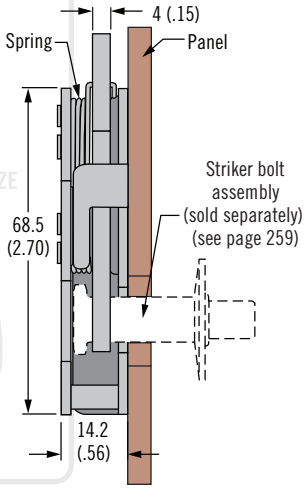

Integrated Bumper Version

(dimensions same as standard version except as shown)

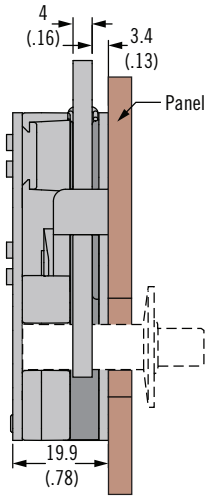

Single Stage - Direct Actuation

(left hand actuation shown)

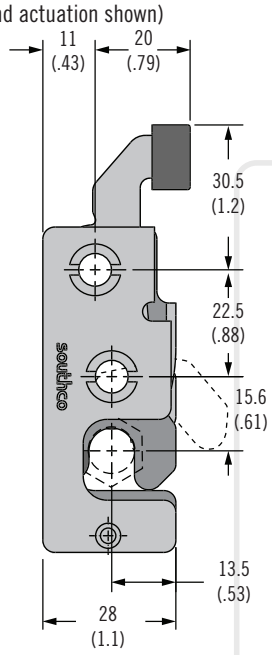

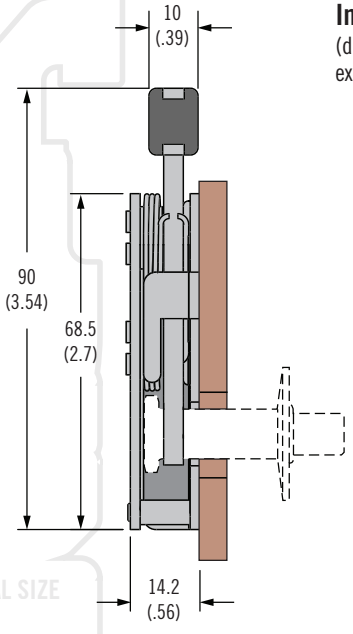

Integrated Bumper Version

(dimensions same as standard version except as shown)

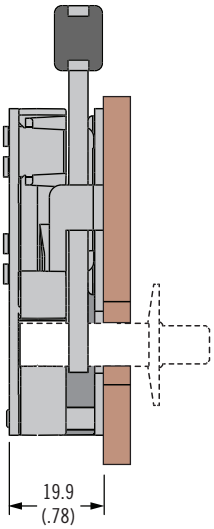

- **Compatible with wide array of actuators**
- **EN 45545-3 E60 Compliant (Standard version only)**
- **Integrated bumper version for anti-vibration feature**

Material and Finish

Steel, zinc plated

Accessories

Striker bolts for standard version and integrated bumper version are different. See page 297 for both versions.

Cables and retainer clips
see page 322-323

Notes

Electromechanical rotary latch available see page 20

Part Number Selection

S Stage & Actuation
- **1** Single stage, right hand
- **2** Single stage, left hand
- **3** Two stage, right hand
- **4** Two stage, left hand

L Lever Type
- **6** Top
- **9** Direct Actuation

R4 - 10 - S I - L 0 B - M

I Mounting Style
- **0** Ø7.2 (.283) thru
- **1** 1/4-20 thread
- **2** M6 x 1 thread

B Base Style
- **1** Standard
- **5** Integrated bumper version

M Material
- **10** Steel
- **20** Stainless steel

R4 Rotary Latch

Light-duty · Concealed · Dual Trigger · Single and two stage

- **Direct actuation, no cable or rod required**
- **Integrated bumper version for anti-vibration feature**
- **EN 45545-3 E60 Compliant (Standard version only)**

Material and Finish

Steel, zinc plated

Accessories

Striker bolts for standard version and integrated bumper version are different. See page 297 for both versions.

Trigger - use retaining clip R4-0-43922-2
Lever - use retaining clip R4-0-43922

Notes

Electromechanical rotary latch available see page 20

For electrical actuation option for bottom lever designs, see page 43

Single Stage - Dual Trigger - Bottom

(left hand actuation shown)

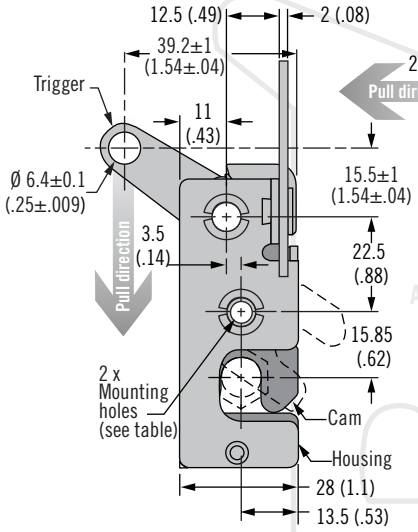

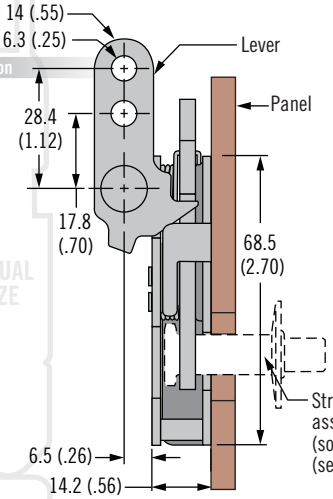

Integrated Bumper Version

(dimensions same as standard version except as shown)

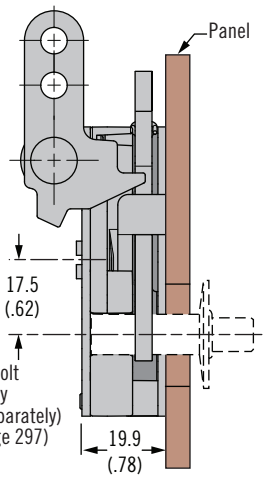

Single Stage - Dual Trigger - Top

(left hand actuation shown)

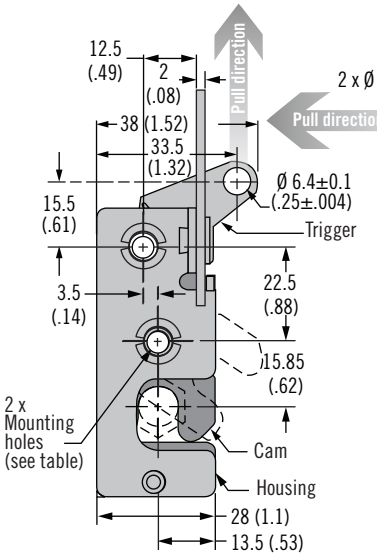

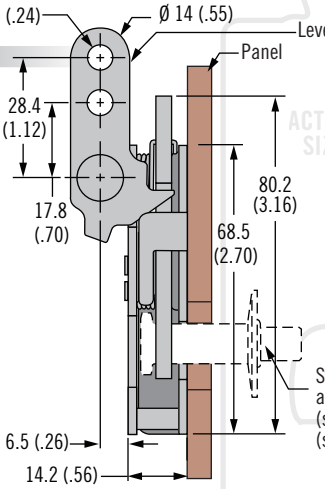

Integrated Bumper Version

(dimensions same as standard version except as shown)

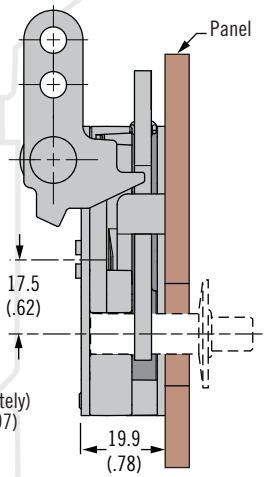

Part Number Selection

S Stage & Actuation
1 Single stage, right hand
2 Single stage, left hand
3 Two stage, right hand
4 Two stage, left hand

L Lever Type
7 Dual trigger, bottom
8 Dual trigger, top

R4 - 10 - S I - L 0 B - M

I Mounting Style
0 Ø7.2 (.283) thru
1 1/4-20 thread
2 M6 x 1 thread

B Base Style
1 Standard
5 Integrated bumper version

M Material
10 Steel

Dimensions in millimeters (inch) unless otherwise stated

R4 Rotary Latch

Striker bolt · Light-duty · Installation

Striker Bolt Assembly - Standard
(sold separately)

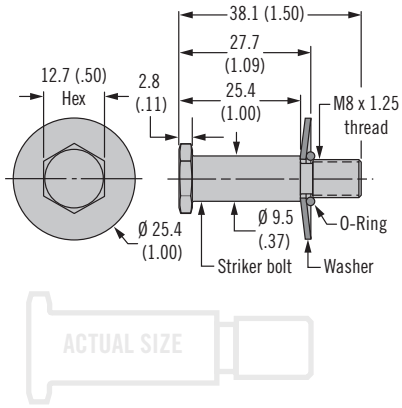

Striker Bolt Assembly - Integrated Bumper
(sold separately)

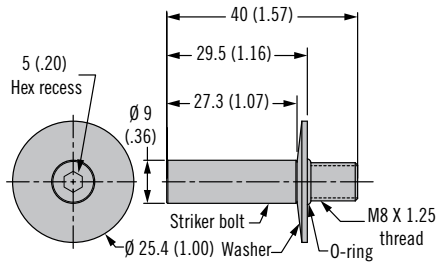

Striker Bolt Standard	
Part Number	**Material**
R4-90-121-10	Steel, Zinc Plated
R4-90-121-20	Stainless Steel

Striker Bolt Integrated Bumper	
Part Number	**Material**
R4-90-124-10	Steel, Zinc Plated
R4-90-124-20	Stainless Steel

Striker 90° Mounting Bracket

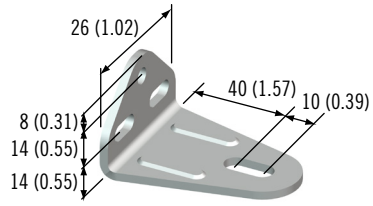

Striker Mounting Bracket	
Part Number	**Material**
R4-0-50114	Stainless Steel

Wire Form Strikers
(sold separately)

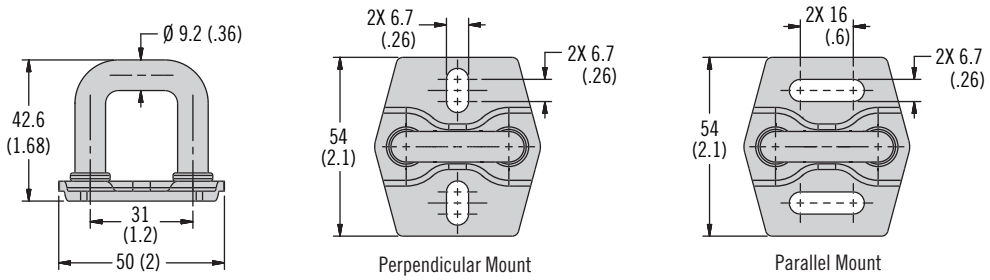

Wire Form Strikers - Standard Ø9.2 (.36)		
Part Number	**Mount**	**Material**
R4-90-101-10	Perpendicular	Steel, Zinc Plated
R4-90-101-15	Perpendicular	Steel, Black Zinc Nickel Plated
R4-90-101-77	Perpendicular	Steel, Zinc Nickel Plated
R4-90-102-10	Parallel	Steel, Zinc Plated
R4-90-102-15	Parallel	Steel, Black Zinc Nickel Plated
R4-90-102-77	Parallel	Steel, Zinc Nickel Plated

Wire Form Strikers -Integrated Bumper Ø9 (.35)		
Part Number	**Mount**	**Material**
R4-90-104-10	Perpendicular	Steel, Zinc Plated
R4-90-104-15	Perpendicular	Steel, Black Zinc Nickel Plated
R4-90-104-77	Perpendicular	Steel, Zinc Nickel Plated
R4-90-106-10	Parallel	Steel, Zinc Plated
R4-90-106-15	Parallel	Steel, Black Zinc Nickel Plated
R4-90-106-77	Parallel	Steel, Zinc Nickel Plated

- **Strikers for R4-10 series rotary latch**

Material and Finish
Steel, zinc plated Steel, zinc nickel plated, Steel, black zinc nickel plated, Stainless Steel, passivated

Operation

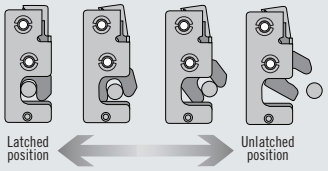

Part Number
See tables

R4 Rotary Latch

Medium-Duty – Concealed

- **Symmetrical design with cable mount simplifies installation**
- **Integrated bumper reduces noise and dampens vibration**
- **Front or side mount**

Material and Finish

Steel, zinc plate or zinc nickel plate

Accessories

Strikers see page 297 for 9mm diameter (integrated bumper) solutions.
Cables and retainer clips see pages 322-323

Latch with mount for cable without return assist spring

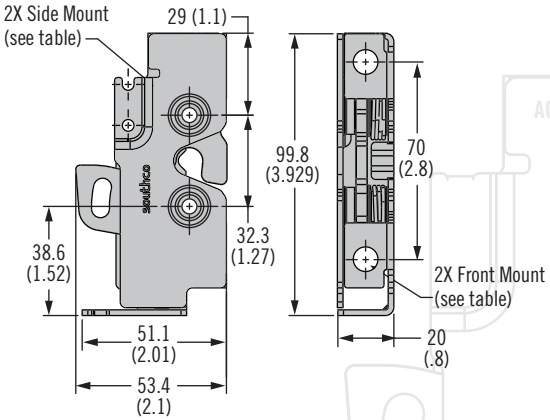

Panel preparation side mount

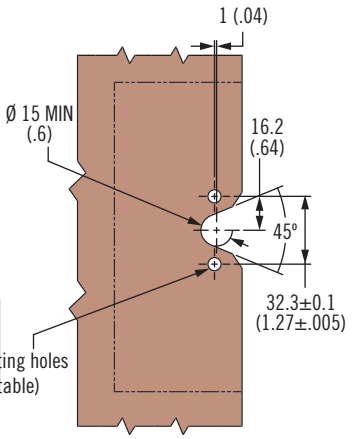

Latch with mount for cable with return assist spring

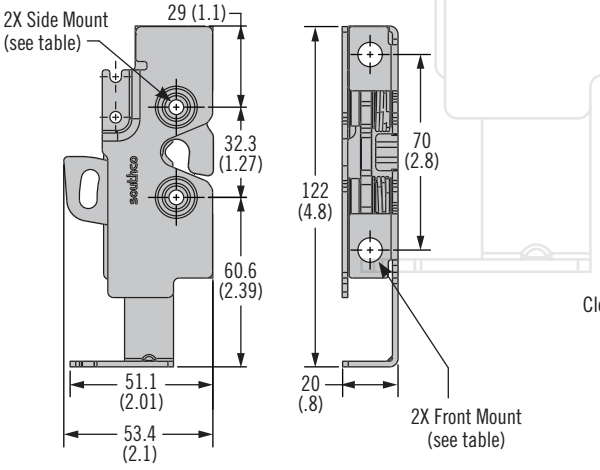

Panel preparation front mount

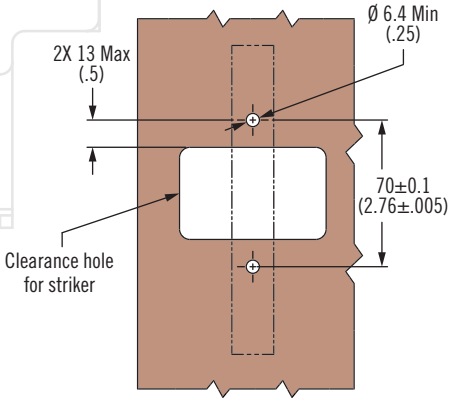

Part Number Selection

R4 - 25 - 2 I 0- 5 0 0 B - MM

I **Mounting Style**
- **0** Side mount Ø6.7(.283) thru
- **1** Side mount 1/4-20 thread
- **2** Side mount M6 x 1 thread
- **3** Front mount (M6) with side mount Ø6.7(.283) thru

B **Base Style**
- **2** Mount for cable with return spring assist, no bumper
- **3** Mount for cable without return spring assist, no bumper
- **6** Mount for cable with return spring assist, with bumper
- **7** Mount for cable without return spring assist, with bumper

MM **Material**
- **10** Steel, zinc plated
- **15** Steel, black zinc nickel

Dimensions in millimeters (inch) unless otherwise stated

southco®

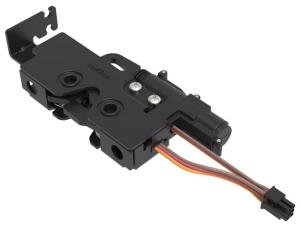

Latch with door sensor

(with mount for cable with return assist spring shown)

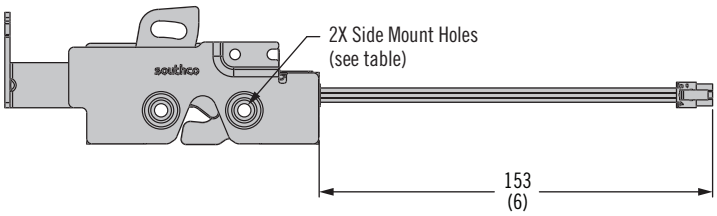

Switch Pin Out	
Pin	**Function**
1	No connect
2	No connect
3	No connect
4	Switch common
5	Door secure
6	Door open

Molex Micro-Fit 3.0 connector

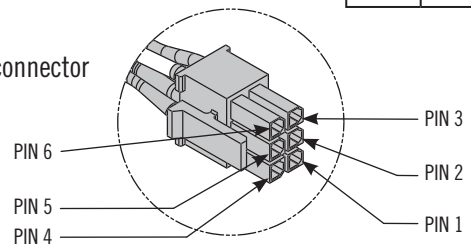

Latch with door sensor and 12 V sealed electronic actuator

(with mount for cable without return assist spring shown)

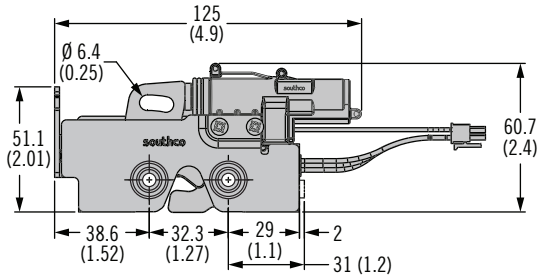

Switch with Actuator Pin Out	
Pin	**Function**
1	Ground
2	Power release
3	Power relock
4	Switch common
5	Door secure
6	Door open

Enable wireless operation with Southco's *BLUETOOTH*® Controller

Part Number Selection

R4 - 25 - 2 I 0- 5 1 E B- MM

I **Mounting Style**
- **0** Side mount Ø6.7(.283) thru
- **1** Side mount 1/4-20 thread
- **2** Side mount M6 x 1 thread
- **3** Front mount (M6) with side mount Ø6.7(.283) thru

E **Electronic Actuation Options**
- **0** None (latch with switch only)
- **B** 12VDC sealed (latch with switch and electronic actuator)

B **Base Style**
- **2** Mount for cable with return spring assist, no bumper
- **3** Mount for cable without return spring assist, no bumper
- **6** Mount for cable with return spring assist, with bumper
- **7** Mount for cable without return spring assist, with bumper

MM **Material**
- **10** Steel, zinc plated
- **15** Steel, black zinc nickel

R4 Rotary Latch

Medium-Duty · Concealed · Single and two stage

- **Compatible with wide array of actuators**
- **Hand actuation option**
- **EN 45545-3 E60 Compliant**

Material and Finish

Steel, zinc plated or 304 stainless steel, passivated

Accessories

Cables and retainer clips
see pages 322-323

Notes

Electromechanical rotary latch available see page 20

For panel preparation visit www.southco.com/R4

Part Number

See table

Order latch and striker separately

Remote Actuation (left hand, two stage version shown)

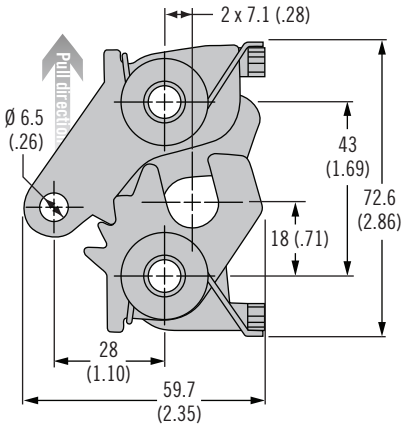

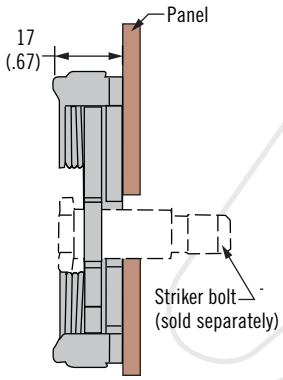

Striker Bolt (sold separately)

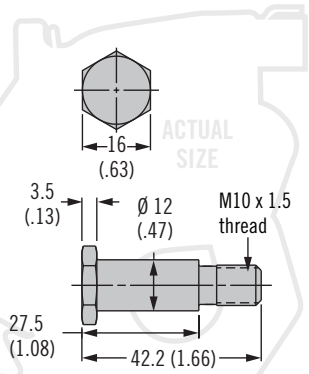

Striker Bolt Part Numbers	
Part Number	**Material**
R4-91-231-10	Steel
R4-91-231-20	Stainless Steel

Hand Actuation (left hand, single stage version shown)

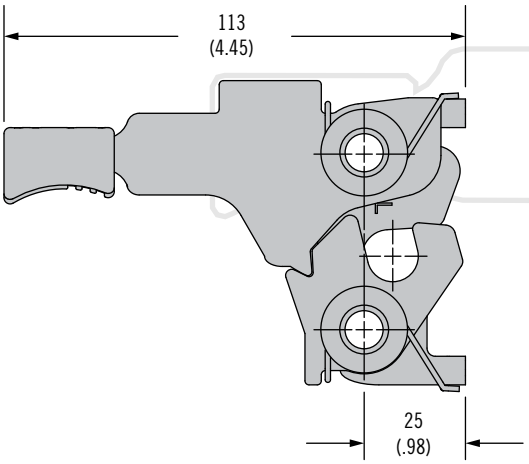

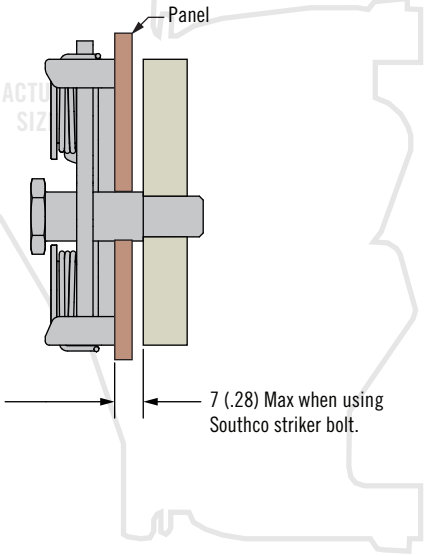

S Stage & Actuation
- **1** Single stage, right hand
- **2** Single stage, left hand
- **3** Two stage, right hand
- **4** Two stage, left hand

I Mounting Style
- **0** Ø 8.3 (.327) thru
- **1** 5/16-18 thread
- **2** M8 x 1.25 thread

R4 - 20 - S I - L 01 - M

M Material
- **10** Steel
- **20** Stainless steel

L Lever Type
- **4** Hand actuation (steel only)
- **5** Bottom

Dimensions in millimeters (inch) unless otherwise stated

southco®

R4 Rotary Latch

Medium · Concealed · Debris Resistant · Two stage

Two Stage (Left hand actuation shown)

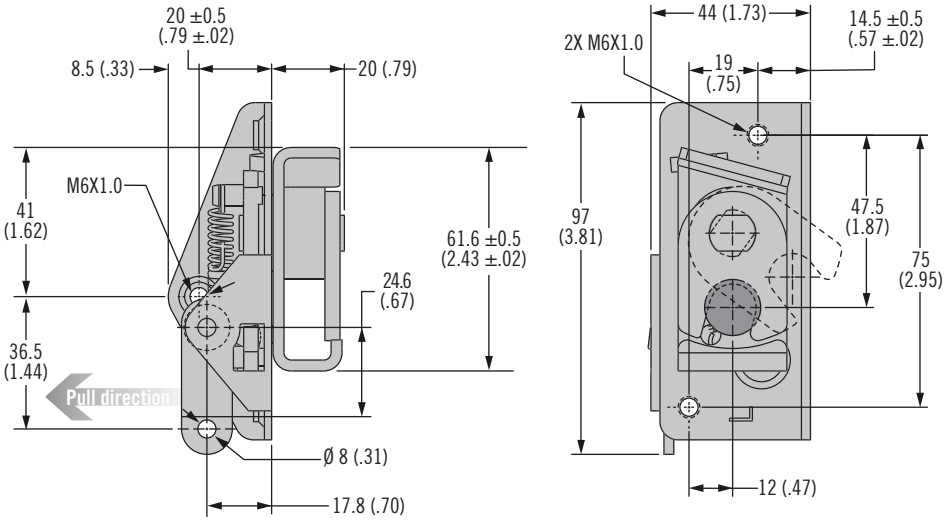

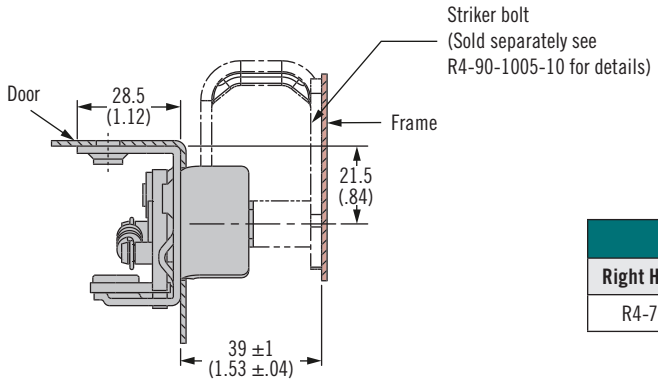

Part Number	
Right Hand Actuation	**Left Hand Actuation**
R4-75-32-201-10	R4-72-42-201-10

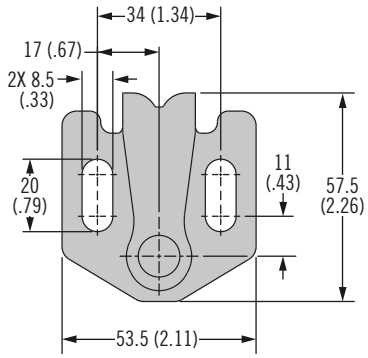

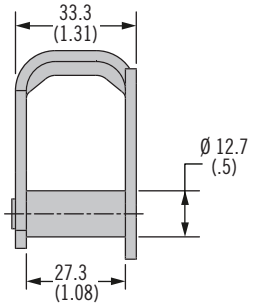

Protected Striker	
Part Number	**Material**
R4-90-1005-10	Steel

- **Compatible with a wide array of actuators**
- **Debris resistant concealed mounting**
- **Two stage latching**

Material and Finish

Steel, zinc plated

Accessories

Retainer clip AC-9BX-20-34
see page 323

Notes

Electromechanical rotary latch available see page 20

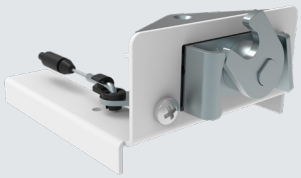

Part Number

See table

Order latch and striker separately

R4 Rotary Latch

Heavy-Duty · Concealed · Single and two stage

- **Compatible with wide array of actuators**
- **FMVSS 206 capable options**
- **EN 45545-3 E60 compliant (Standard version only)**
- **Integrated bumper version for anti-vibration feature**

Material and Finish

Steel, zinc plated
Steel, zinc nickel plated (black and clear)
Stainless steel, passivated

Accessories

Cables and retainer clips see pages 322-323

Striker options see page 301

Notes

R4-38-101-10 support plate sold separately for FMVSS 206 capability

Mounts opposite of latch housing.

Perpendicular (left hand actuation shown)

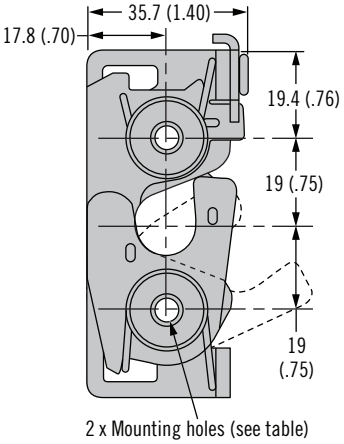

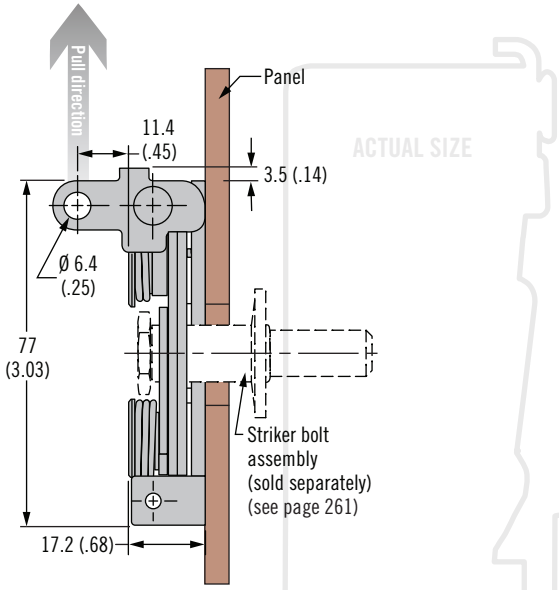

2-Point Actuator (left hand actuation shown)

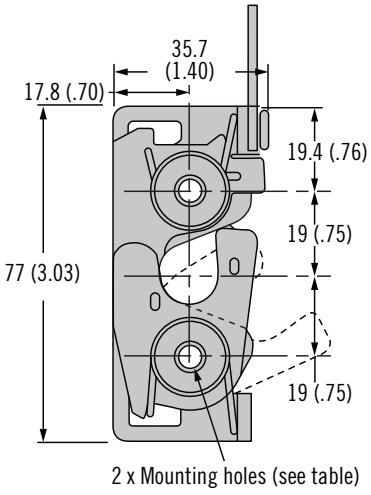

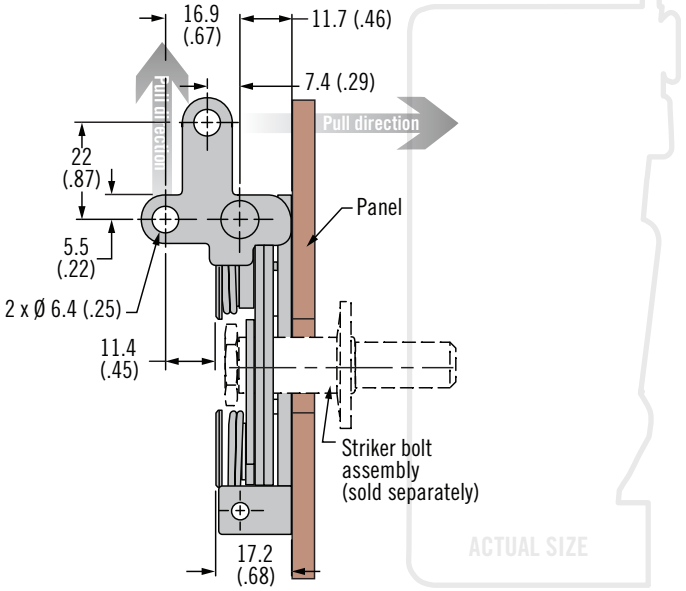

Part Number Selection

S Stage & Actuation
1 Single stage, right hand
2 Single stage, left hand
3 Two stage, right hand
4 Two stage, left hand

L Lever Type
1 Perpendicular
3 Two point
7 Dual Lever, Bottom & Perpendicular

R4 - 30 - S I - L 0 B - M

I Mounting Style
0 Ø6.7 (.283) thru
1 1/4-20 thread
2 M6 x 1 thread

1 Base Style
1 Standard
5 Integrated bumper

M Material
10 Steel, zinc plated
15 Steel, black zinc nickel
77 Steel, clear zinc nickel
20 Stainless steel

Dimensions in millimeters (inch) unless otherwise stated

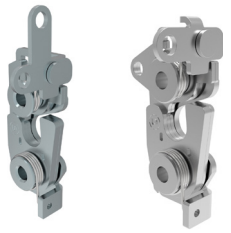

Dual Trigger (left hand actuation shown)

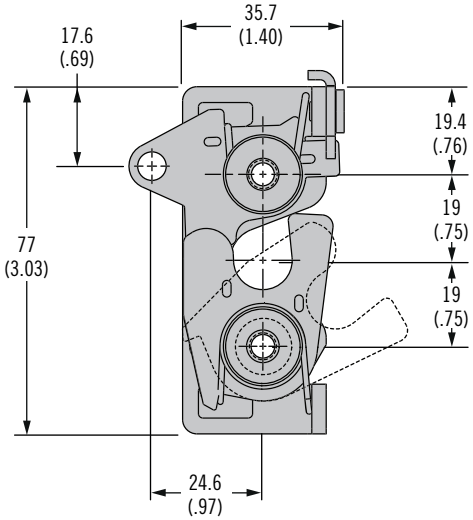

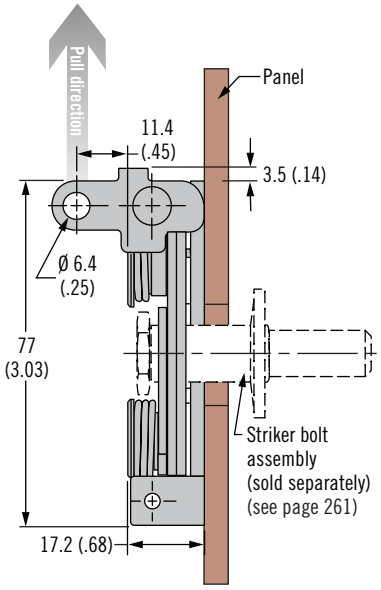

Panel Preparation

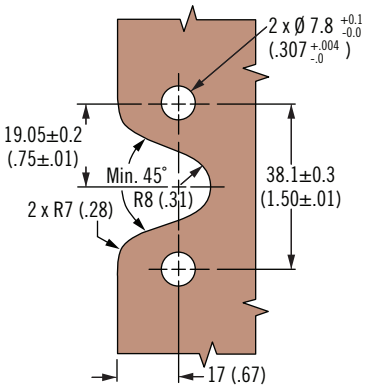

Strikers (sold separately)

Striker Bolt Part Number	
Part Number	**Material**
R4-90-321-10	Steel
R4-90-321-20	Stainless Steel

Protected Striker	
Part Number	**Material**
R4-90-1005-10	Steel
*Not FMVSS 206 Capable	

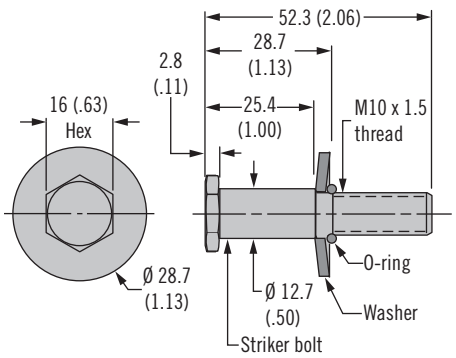

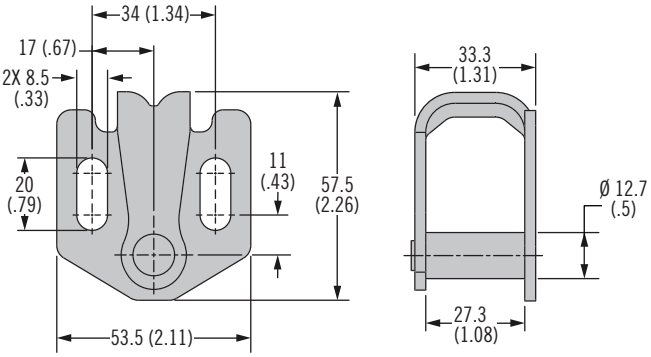

ACTUAL SIZE

R4 Rotary Latch

Heavy-Duty · Concealed · Single and two stage

- **Compatible with wide array of actuators**
- **FMVSS 206 capable options**
- **EN 45545-3 E60 compliant (Standard version only)**
- **Integrated bumper version for anti-vibration feature**

Material and Finish

Steel, zinc plated
Steel, zinc nickel plated (black and clear)
Stainless steel, passivated

Accessories

Cables and retainer clips see pages 322-323

Striker options see page 301

Notes

R4-38-101-10 support plate sold separately for FMVSS 206 capability

Mounts opposite of latch housing.

Bottom

(left hand actuation shown)

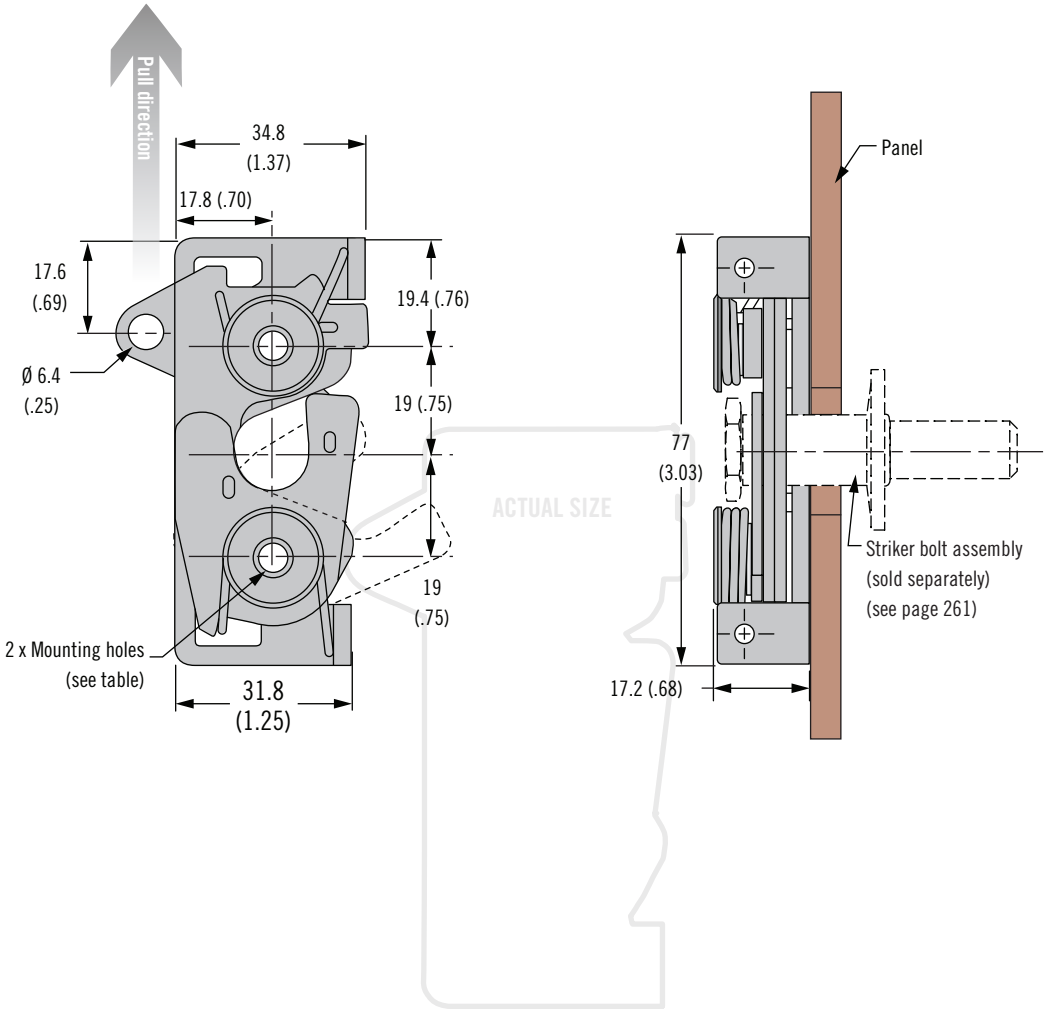

Part Number Selection

S Stage & Actuation
1 Single stage, right hand
2 Single stage, left hand
3 Two stage, right hand
4 Two stage, left hand

R4 - 30 - S I - 50 B - M

I Mounting Style
0 Ø6.7 (.283) thru
1 1/4-20 thread
2 M6 x 1 thread

1 Base Style
1 Standard
2 Standard with cable bracket for spring
3 Standard with cable bracket no spring
5 Integrated bumper
6 Integrated bumper with cable bracket for spring
7 Integrated bumper with cable bracket no spring

M Material
10 Steel, zinc plated
15 Steel, black zinc nickel plated
77 Steel, clear zinc nickel
20 Stainless steel

Dimensions in millimeters (inch) unless otherwise stated

Bottom with cable bracket

(left hand actuation shown)

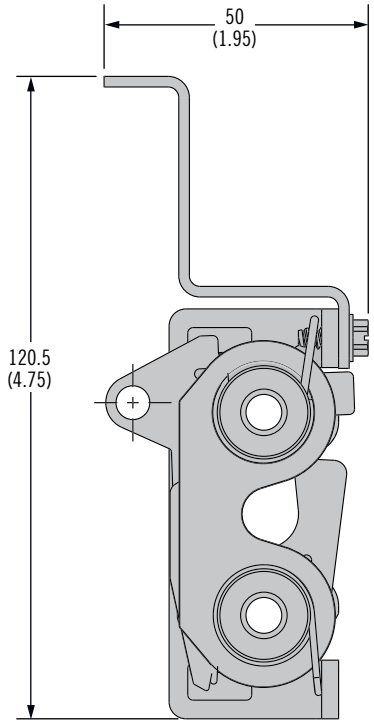

(with bumper shown)

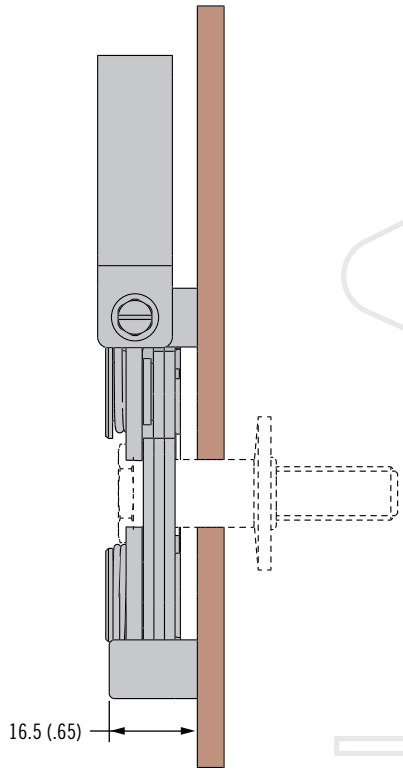

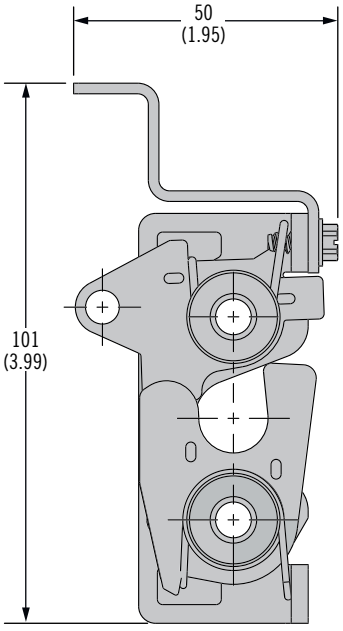

(without bumper shown)

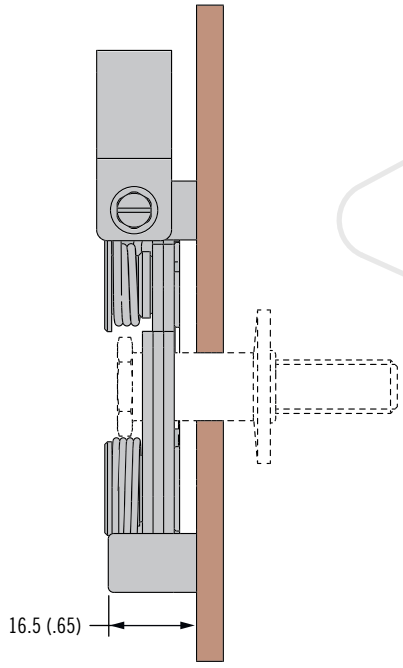

R4 Rotary Latch

Heavy-duty · Two stage

- **Single or multi-point latch capability**
- **Compatible with a wide array of actuators**
- **FMVSS 206 capable**
- **EN 45545-3 E60 compliant**

Material and Finish

Steel, zinc plated

Accessories

Cables and retainer clips see pages 322-323

Notes

Electromechanical rotary latches available see page 20

For panel preparation visit www.southco.com/R4

Striker Bolt Assembly (sold separately): R4-90-441-10

Single Trigger, Perpendicular Actuation

(left hand actuation shown)

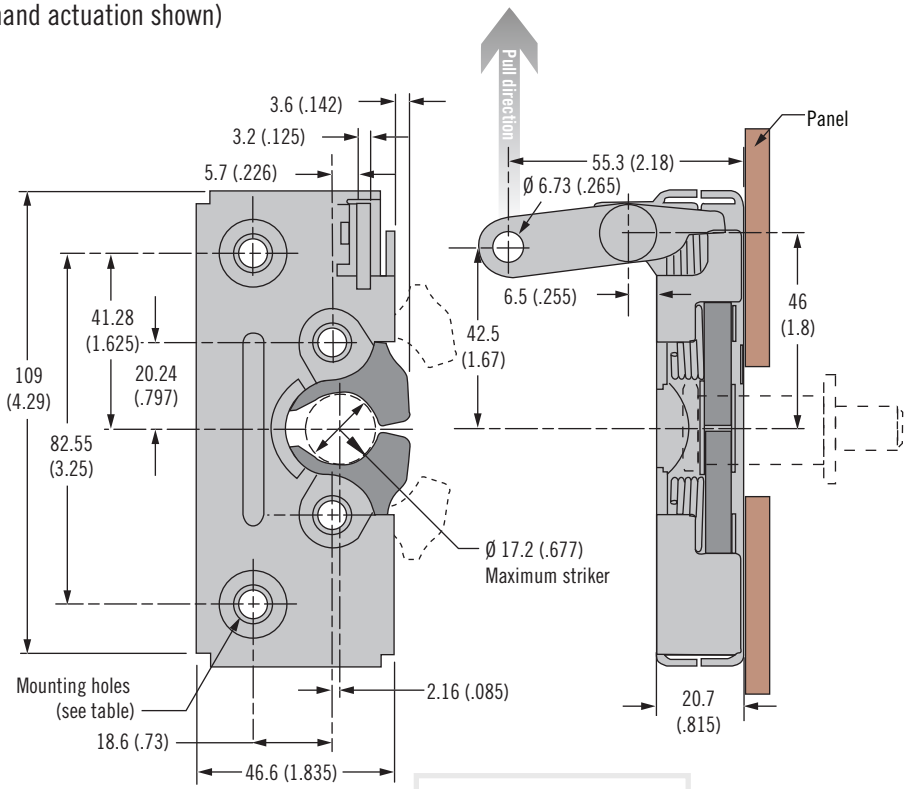

Operation

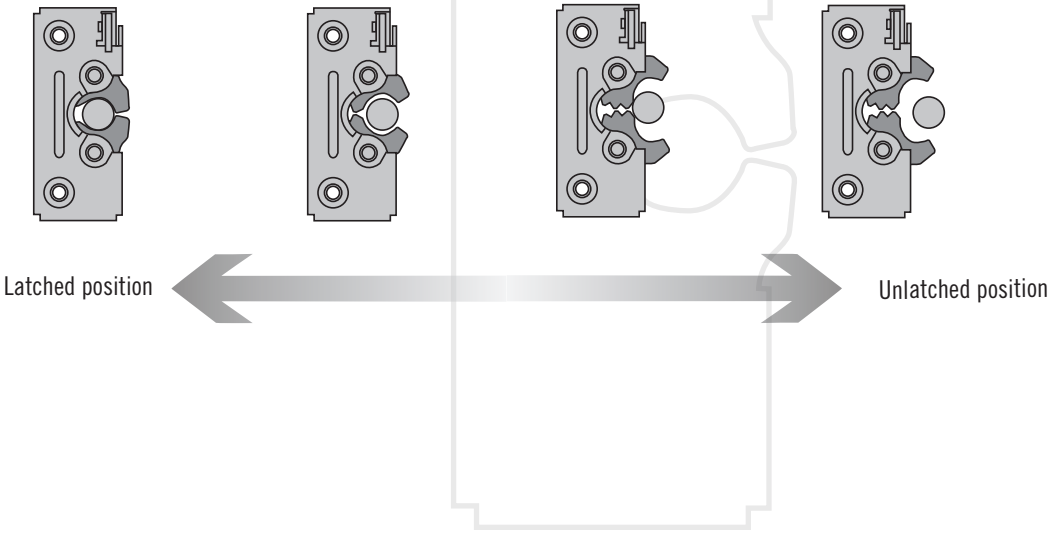

Dimensions in millimeters (inch) unless otherwise stated

Part Number Selection

Mounting Style	Part Number		
	Left Hand Actuation	Right Hand Actuation	Striker Bolt
Ø 7.2 (.283) Thru	R4-50-40-101-10	R4-50-30-101-10	R4-90-441-10
1/4-20 Thread	R4-50-41-101-10	R4-50-31-101-10	
M6 X 1 Thread	R4-50-42-101-10	R4-50-32-101-10	

Striker Bolt Assembly (sold separately)

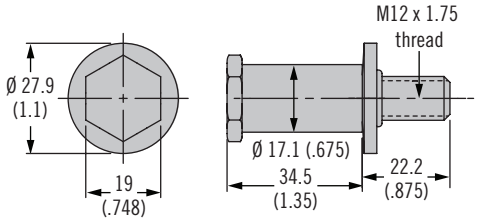

R4-81 Rotary Paddle Latch

Pull-to-open

- **Rear mount installation**
- **Direct actuation, no cable or rod required**
- **Single or two stage latching**
- **Integrated bumper option**
- **Environmentally sealed**

Material and Finish

Housing: Glass-filled nylon, black

Paddle: Zinc alloy, black powder coated or chrome plated

Installation Notes

Maximum tightening torque on supplied mounting nuts 3 N·m (27 in·lbf)

Accessories

Striker bolt see page 297

Notes

For lock core selection and a complete overview of the *SOUTHCO*® Key-Choice System see page 190

Part Number

See table

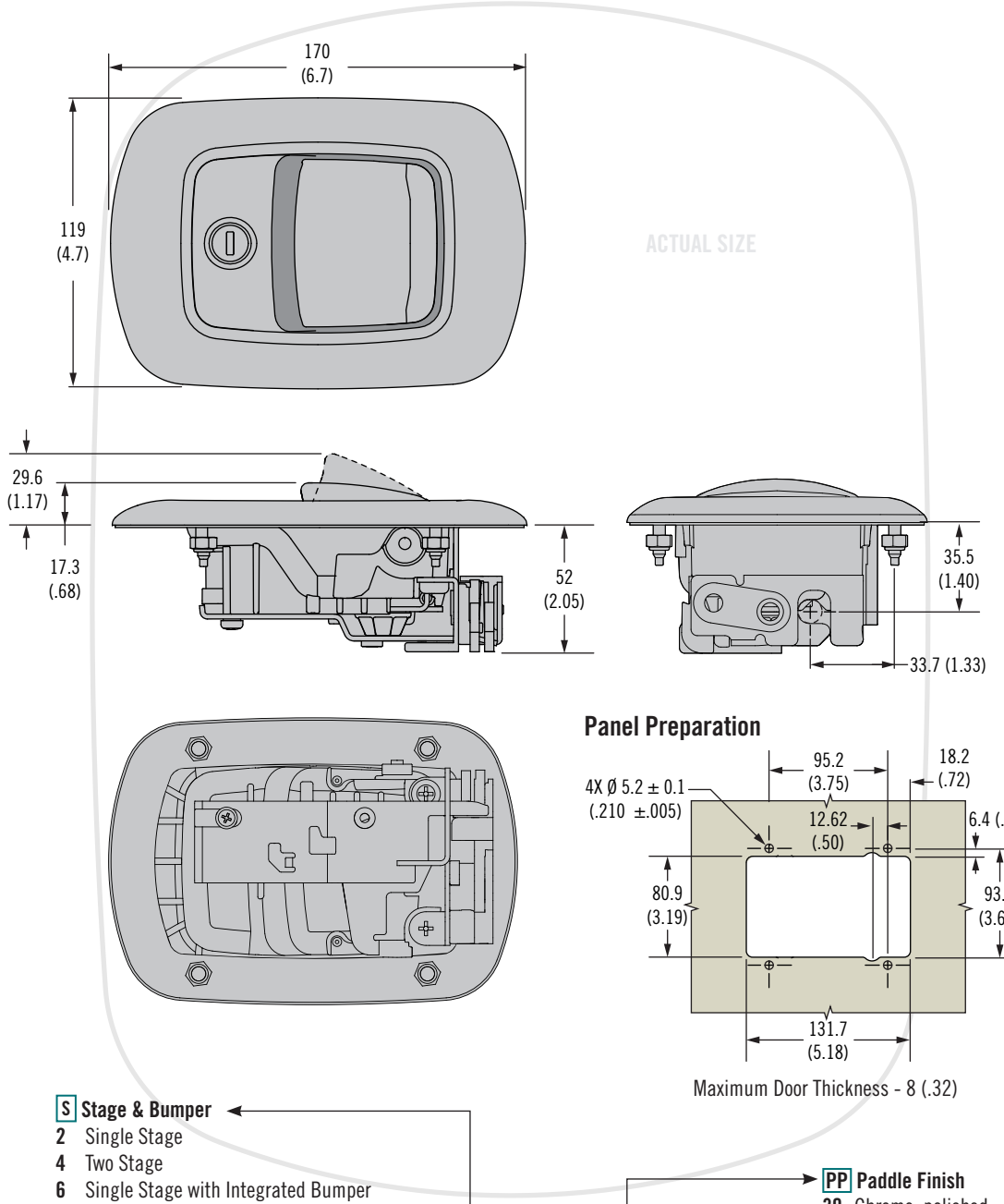

Panel Preparation

Maximum Door Thickness - 8 (.32)

S Stage & Bumper
- **2** Single Stage
- **4** Two Stage
- **6** Single Stage with Integrated Bumper
- **8** Two Stage with Integrated Bumper

PP Paddle Finish
- **30** Chrome, polished
- **50** Black powder coated

R4 - 81 - S L 1 - PP - KC

L Locking Options
- **1** Reversible Key (No Keys - R001)
- **2** Reversible Key (2 Keys included - R001)
- **3** Reversible Key (2 keys included - Keyed differently)
- **4** Standard Key (No keys - CH751)
- **5** Standard Key (2 Keys included - CH751)
- **6** Standard Key (2 keys included - Keyed differently)
- **9** No Lock Plug installed (See notes for more information)

KC Key Codes

(Omit for Locking Options 1, 2, 4, 5 and 9)
- *__KD10__ Keyed Differently (Only used if L =3 or 6)
- *__MK10__ Master Keyed Differently (Only used if L =6)

*Supplied in multiples of 10 with 10 different key codes.

Dimensions in millimeters (inch) unless otherwise stated

R4-82 Rotary Paddle Latch

Pull-to-open

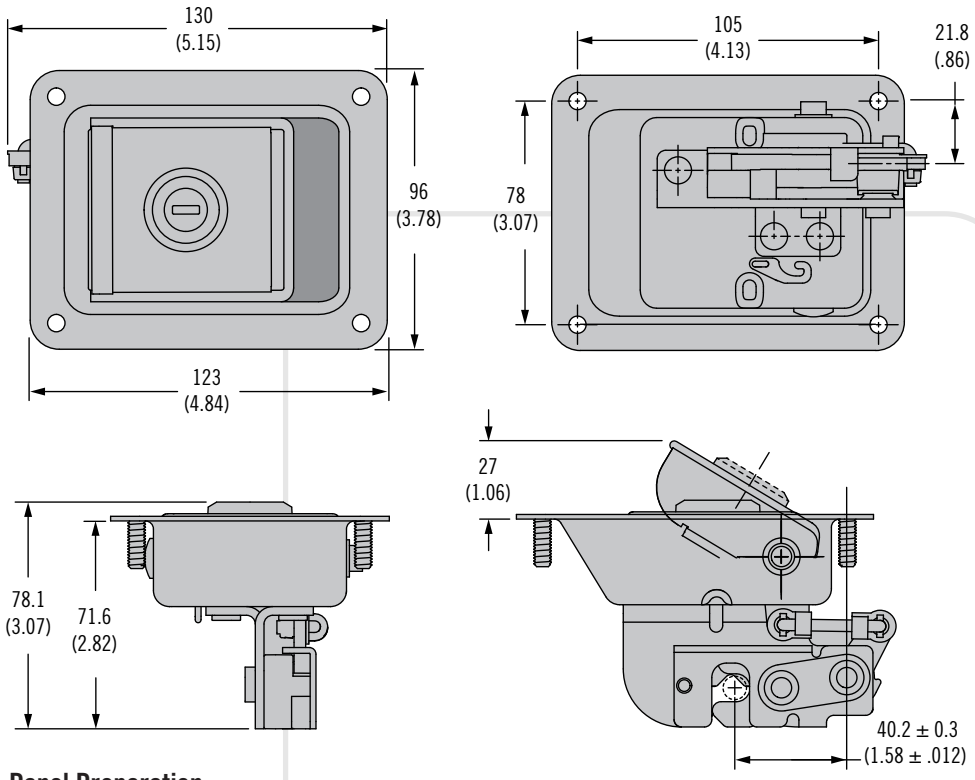

Panel Preparation

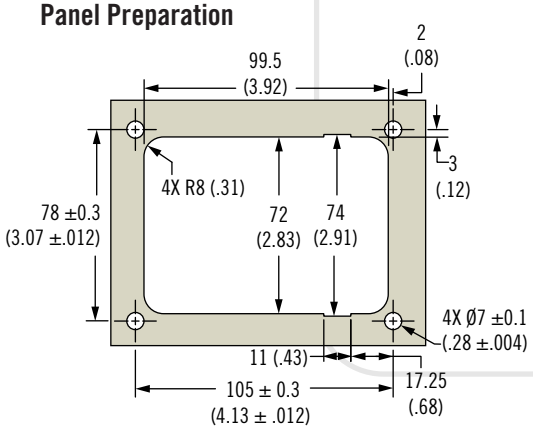

ACTUAL SIZE

- **Direct actuation, no cable or rod required**
- **Single or two stage latching**
- **Integrated bumper**
- **Thru hole or stud mounting options**

Material and Finish

Cup and handle: Steel, zinc plated or black powder coat

Lock slide, latch frame, pawl, trigger: Steel, zinc plated

Installation Notes

Thru hole: M5 or #8 screws recommended

Studs: Use M6 mounting nuts (max tightening torque 7 N·m (62 in·lbf))

Studs: Max panel thickness 10 (.39)

Accessories

Striker bolt see page 297

Notes

For lock core selection and a complete overview of the *SOUTHCO*® Key-Choice System see page 190

Part Number Selection

See table

S **Stage**
- **6** Single Stage with Integrated Bumper
- **8** Two Stage with Integrated Bumper

H **Housing**
- **2** Rivet Thru Hole 5.2 (.20)
- **4** Press-in Studs

PP **Finish**
- **10** Zinc plated
- **50** Black powder coated

R4 - 82 - S L H - PP - KC

L **Locking Options**
- **1** Reversible Key (No Keys - R001)
- **2** Reversible Key (2 Keys included - R001)
- **3** Reversible Key (Keyed differently - 2 keys included)
- **4** Standard Key (No keys - CH751)
- **5** Standard Key (2 Keys included - CH751)
- **6** Standard Key (Keyed differently - 2 keys included)
- **7** Reversible Key (2 keys included - 14603)
- **9** No Lock Plug installed (See notes for more information)

KC **Key Codes**

(Omit for Locking Options 1, 2, 4, 5 and 9)

*__KD10__ Keyed Differently (Only used if **L** =3 or 6)

*__MK10__ Master Keyed Differently (Only used if **L** =6)

*Supplied in multiples of 10 with 10 different key codes.

AC-20 Multi Point Actuator

Pull-to-open Paddle

- **Single or multi-point actuation capability**
- **Compatible with a wide range of rotary latches**
- **Environmentally sealed**

Material and Finish

Housing: Glass-filled nylon, black

Paddle: Zinc alloy, black powder coated or chrome plated

Installation Notes

Maximum tightening torque on supplied mounting nuts 3 N·m (27 in·lbf)

Notes

For lock core selection and a complete overview of the *SOUTHCO*® Key-Choice System see page 190

Can be configured with 1 or 2 cables.
See Cable Selection Tool on Southco.com

ACTUAL SIZE

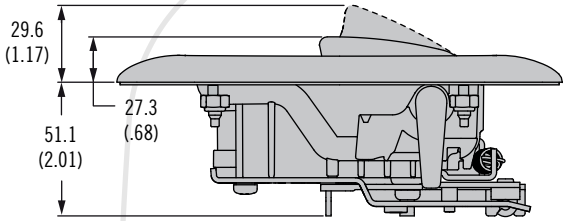

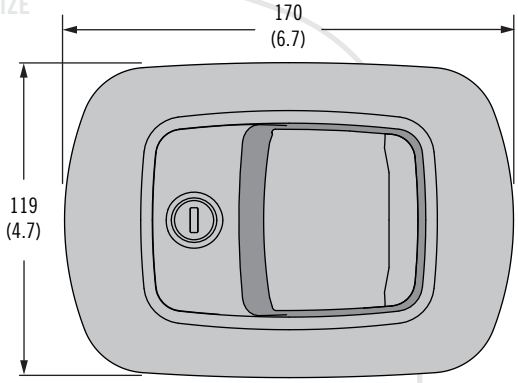

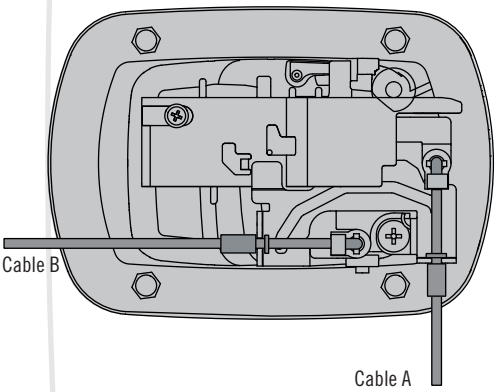

Panel Preparation

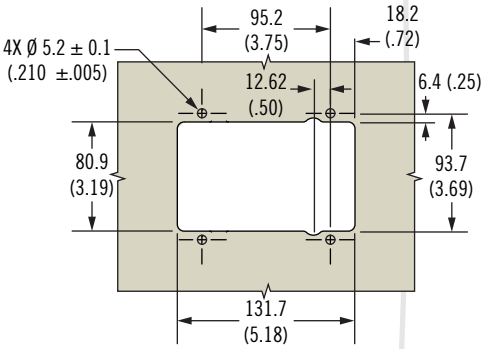

Maximum Door Thickness - 8 (.32)

Part Number

See table

AC - 20 - 3 L 1 - PP - KC

PP Paddle Finish
- **30** Chrome, polished
- **50** Black powder coated

L Locking Options
- **1** Reversible Key (No Keys - R001)
- **2** Reversible Key (2 Keys included - R001)
- **3** Reversible Key (Keyed differently - 2 keys included)
- **4** Standard Key (No keys - CH751)
- **5** Standard Key (2 Keys included - CH751)
- **6** Standard Key (Keyed differently - 2 keys included)
- **9** No Lock Plug installed (See notes for more information)

KC Key Codes
(Omit for Locking Options 1, 2, 4, 5 and 9)
- ***KD10** Keyed Differently (Only used if L =3 or 6)
- ***MK10** Master Keyed Differently (Only used if L =6)

*Supplied in multiples of 10 with 10 different key codes.

Dimensions in millimeters (inch) unless otherwise stated

R3-22 Multi Point Actuator

Pull-to-open Paddle

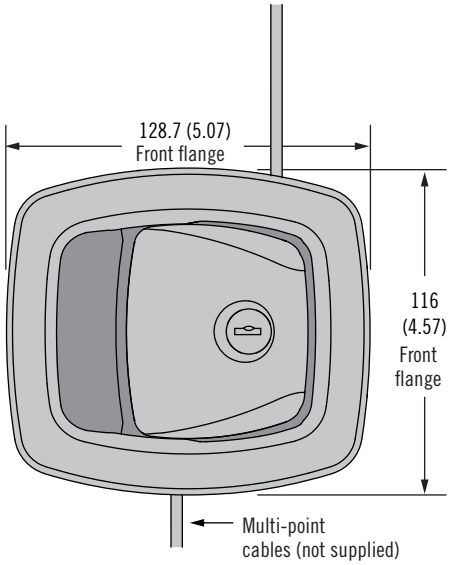

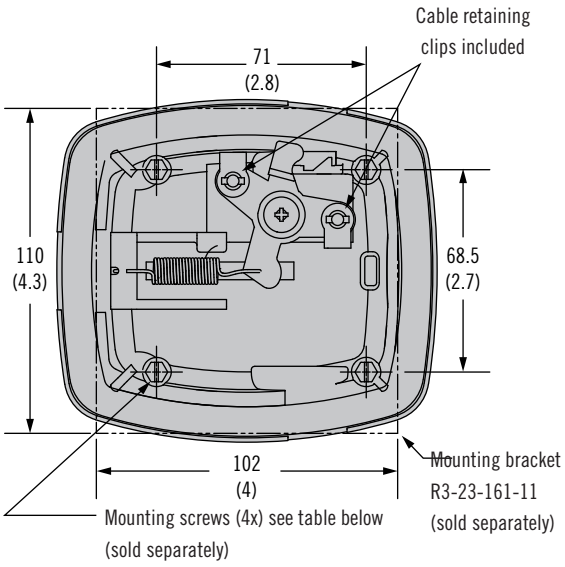

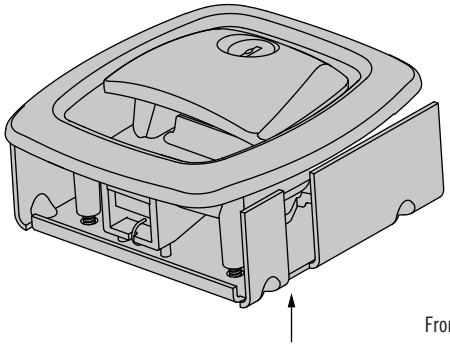

Panel Preparation

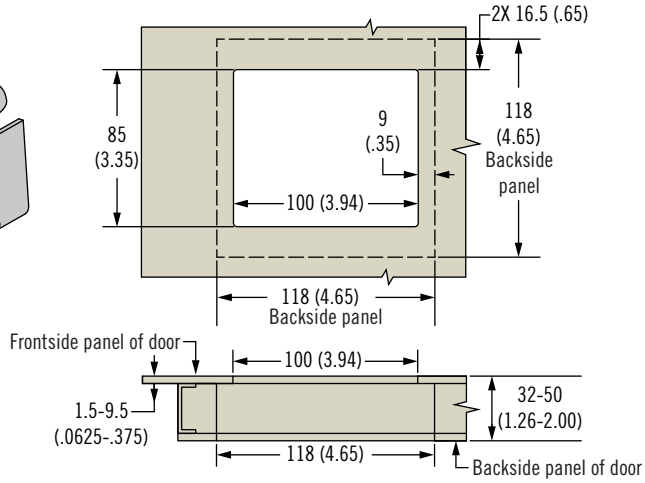

R3 - 22 - 3 L 0 - F 0

L Locking Options
- **0** Non-locking
- **1** Reversible Key (No keys - R001)
- **2** Reversible Key (2 keys included - R001)
- **4** Standard Key (No keys - CH751)
- **5** Standard Key (2 Keys included - CH751)
- **9** No lock plug installed (see notes for more information)

F Finish
- **1** Polished chrome
- **5** Black powder coated
- **7** White powder coated

Screws for Mounting Bracket Part Number R3-23-161-11	
Front Door Thickness	**No. 8 Self Tapping Screw (order 4 per latch)**
1.5 (.062) - 4.8 (.187)	R3-23-250-01
4.8 (.187) - 9.5 (.375)	R3-23-250-02

- **Single or multi-point actuation capability**
- **Compatible with a wide range of rotary latches**
- **Environmentally sealed**

Material and Finish

Latch assembly: Zinc alloy, black or white powder coated or chrome plated.
Mounting bracket: Steel, zinc plated

Installation Notes

Maximum tightening torque on mounting screws:
2.8 N·m (25 in·lbf)

Notes

For lock core selection and a complete overview of the *SOUTHCO*® Key-Choice System see page 190

Can be configured with 1 or 2 cables.
See Cable Selection Tool on Southco.com
Cable mounting brackets sold separately. (See page 323)

Part Number

Order latch, bracket and mounting screws separately

For latch see table

For mounting bracket, order part number R3-23-161-11

See table for mounting screws

AC-10 Actuator

Large handle · Flush mount

- **Rear mount installation**
- **Flush mounting style**
- **Single, multi-point or direct pull actuation capability**
- **Multiple key code options**
- **Non-Locking option**
- **Electronic lock/unlock option**

Material and Finish

Housing, handle, rotating linkage: glass-filled nylon, black

Threaded stud and cable bracket retainers: steel, zinc nickel

Housing and handle gaskets: adhesive backed foam, black

Installation Notes

Mounting nut (M6 x 1) not supplied. Installation torque of mounting nuts not to exceed 7 N·m (62 in·lbf)

Notes

For cable configuration, see Cable Selection Tool on Southco.com.

Electronic Actuator Operating Information

Voltage: 12 V ±1.2 V

Current: 2.5 A - 3 A

Pulse Duration: 225 ms ±25 ms

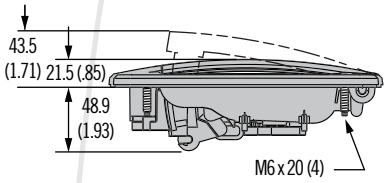

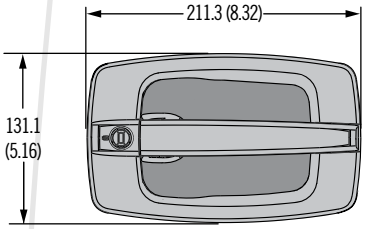

Panel Preparation

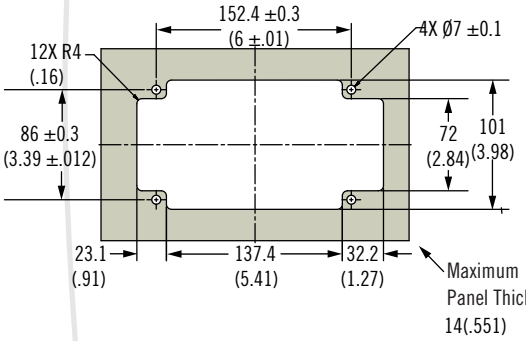

Direct Pull

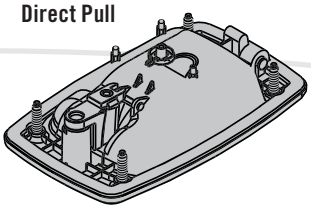

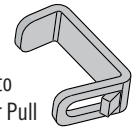

- Recommended to use with Trigger Pull

Part Number	
Trigger Pull	R4-0-51292

Multi-Point Without Cable Bracket

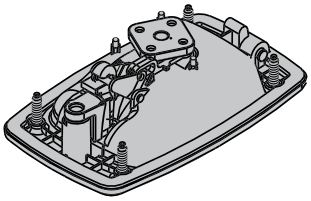

- Recommended to use with Rods

Multi-Point With Cable Bracket

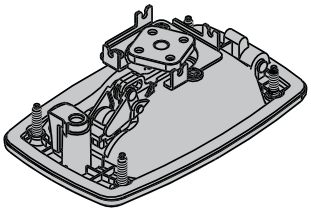

- Recommended for use with Cables.

Multi-Point With Cable Bracket and Lock/Unlock Electronic Actuator

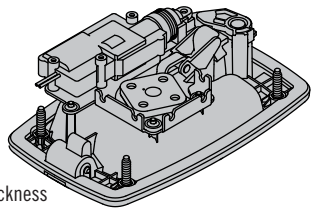

- Recommended for use with Cables.

Part Number Selection

Notes:

For use with Rods / Cables. Recommended Snap-in Retainer for Rotator Plate: Southco Part Number R4-0-43922.

For lock core selection, detailed key information and a complete overview of the *SOUTHCO*® Key-Choice System see PK Lock Cores section.

For unique key code options, please contact customer service.

AC - 10 - S L 1 - 11 - KC

S Actuation Style

- **1** Single Point, Direct Pull
- **2** Multi-Point, without Cable Bracket
- **3** Multi-Point, with Cable Bracket
- **EM-3** Multi-Point with Cable Bracket and Electronic Lock/Unlock (Do not use Locking Option 0)

L Locking Options

- **0** Non-Locking (Do not use Actuation Style EM-3)
- **1** Reversible key (No keys - R001)
- **2** Reversible key (2 keys included - R001)
- **3** Reversible key (keyed differently - 2 keys included)
- **4** Standard key (No keys - CH751)
- **5** Standard key (2 keys included - CH751)
- **6** Standard key (keyed differently - 2 keys included)
- **7** Reversible Key (2 keys included - 14603)
- **9** No Lock Plug installed (See notes for more information)

KC Key Codes

(Omit for Locking Options 0, 1, 2, 4, 5 and 9)

- *__KD10__ Keyed Differently (Only used if L =3 or 6)
- *__MK10__ Master Keyed Differently (Only used if L =6)

*Supplied in multiples of 10 with 10 different key codes.

*Eliminate 10 for AC-10-EM version (Use KD and MK only)

Dimensions in millimeters (inch) unless otherwise stated

AC-11 Actuator

Large Handle · Flush Mount

- Rear mount installation
- Flush mounting style
- Single, multi-point or direct pull actuation
- Multiple key code options
- Non-locking option
- Electronic lock/unlock option

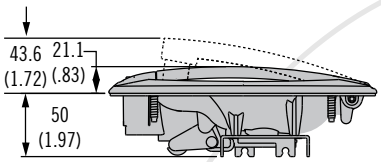

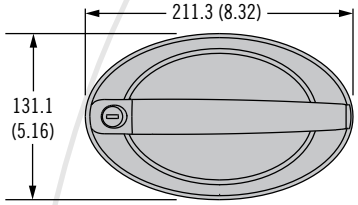

ACTUAL SIZE

Panel Preparation

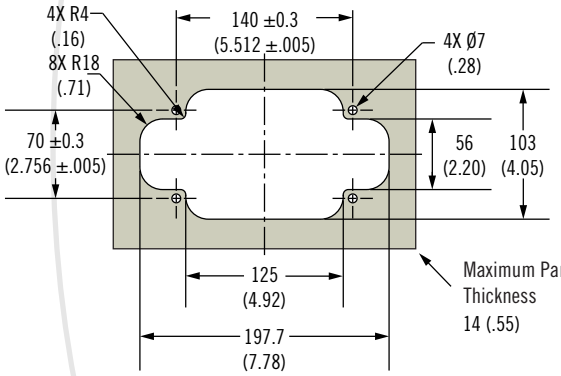

Direct Pull

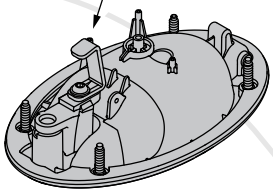

- Recommended to use with Trigger Pull

Part Number	
Trigger Pull	R4-0-51292

Multi-Point Without Cable Bracket

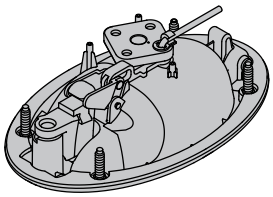

- Recommended to use with Rods

Multi-Point With Cable Bracket

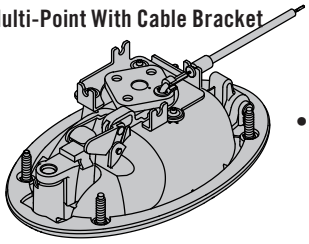

- Recommended for use with Cables

Multi-Point With Cable Bracket and Lock/Unlock Electronic Actuator

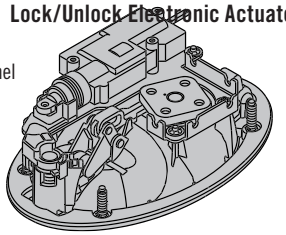

- Recommended for use with Cables to lock/unlock version

Material and Finish

Housing, handle, linkage: glass-filled nylon, black

Threaded stud and cable bracket retainers: steel, zinc nickel plated

Housing and handle gaskets: Adhesive backed foam, black

Installation Notes

Mounting nut (M6 x 1) not supplied. Installation torque of mounting nuts not to exceed 7 N·m (62 in·lbf)

Notes

For cable configuration, see Cable Selection Tool on Southco.com.

Part Number Selection

S Actuation Style

1	Single Point, Direct Pull
2	Multi-Point, without Cable Bracket
3	Multi-Point, with Cable Bracket
EM-3	Multi-Point with Cable Bracket and Electronic Lock/Unlock

AC - 11 - S L 1 - 11 - KC

L Locking Options

0	Non-Locking
1	Reversible key (No keys - R001)
2	Reversible key (2 keys included - R001)
3	Reversible key (keyed differently - 2 keys included)
4	Standard key (No keys - CH751)
5	Standard key (2 keys included - CH751)
6	Standard key (keyed differently - 2 keys included)
7	Reversible Key (2 keys included - 14603)
9	No Lock Plug installed (See notes for more information)

KC Key Codes

(Omit for Locking Options 0, 1, 2, 4, 5 and 9)

*KD10	Keyed Differently (Only used if L =3 or 6)
*MK10	Master Keyed Differently (Only used if L =6)

*Supplied in multiples of 10 with 10 different key codes.
*Eliminate 10 for AC-11-EM version (Use KD and MK only).

Part Number Selection Notes:

For use with Rods / Cables, recommended Snap-in Retainer for Rotator Plate: Southco Part Number R4-0-43922. See Trade Drawing J-R4-0-43922 for more details and options.

For lock core selection, detailed key information and a complete overview of the *SOUTHCO*® Key-Choice System see PK Lock Cores section.

For unique key code options, please contact customer service.

AC-15 Actuator

Large Handle · Surface Mount

- **Rear mount installation**
- **Surface mounting style**
- **Direct pull actuation**
- **Multiple key code options**
- **Non-locking option**

Material and Finish

Housing, handle, linkage: glass-filled reinforced nylon, black

Threaded inserts: brass, natural

Housing and handle gaskets: adhesive backed foam, black

Installation Notes

Mounting hardware (M6 x 1) not supplied. Recommended screw length=panel thickness + 10.0 (.39)

Installation torque of mounting nuts not to exceed 7 N·m (62 in-lbf)

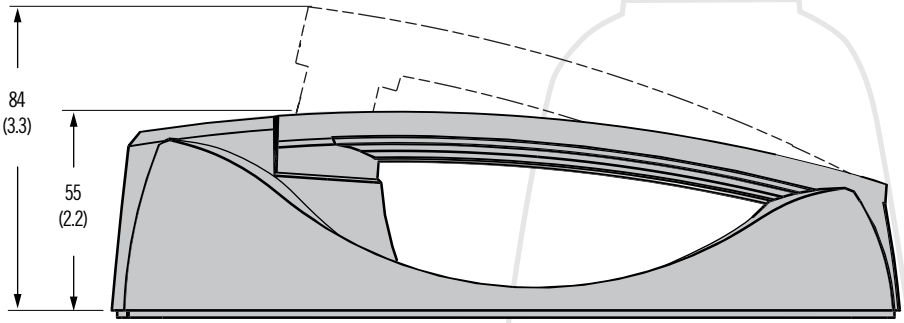

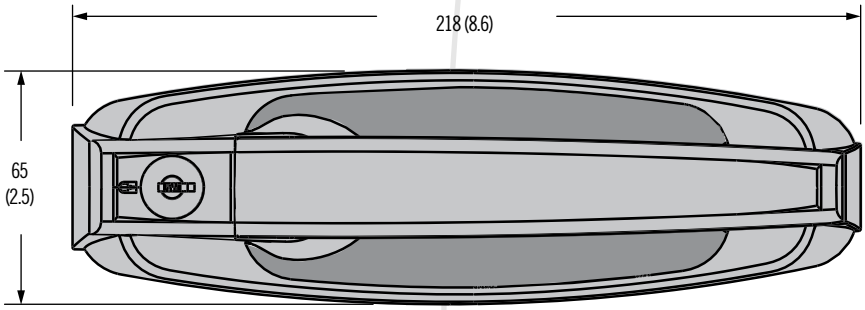

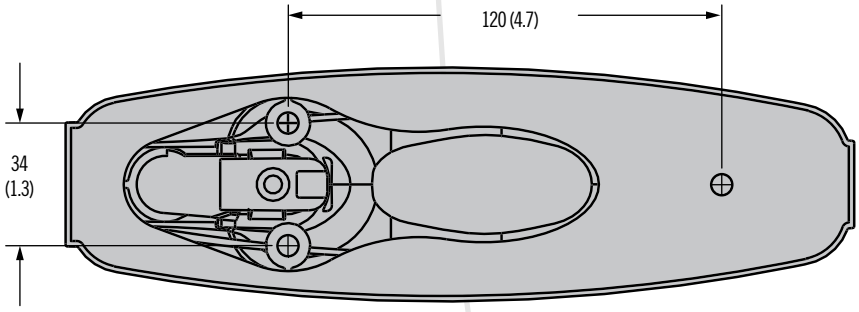

ACTUAL SIZE

Dimensions in millimeters (inch) unless otherwise stated

southco®

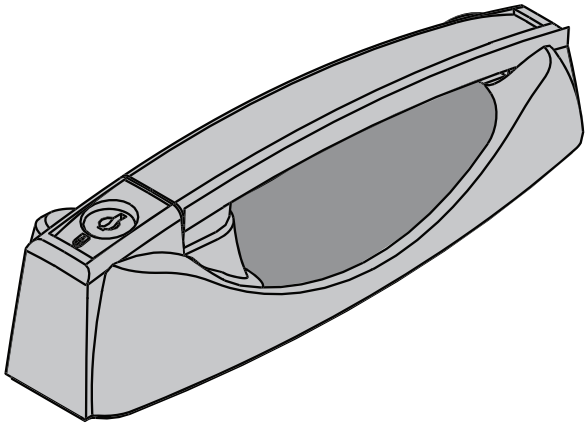

Trigger Pull

Actuator is recommended to use with Trigger Pull

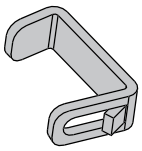

Part Number	
Trigger Pull	R4-0-51292

Panel Preparation

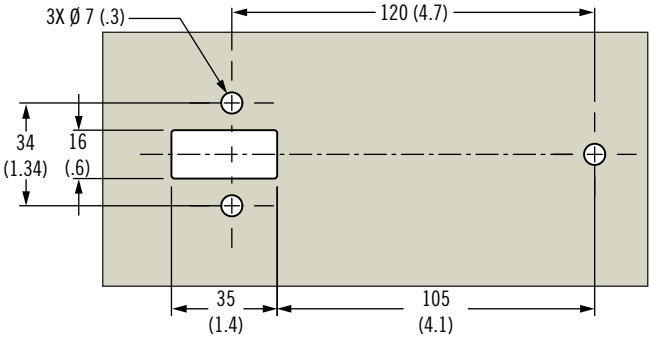

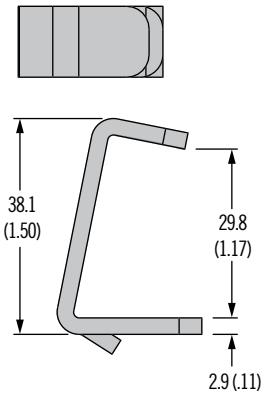

Part Number Selection

AC - 15 - 1 L 1 - 11 - KC

L Locking Options

- **0** Non-Locking
- **1** Reversible key (No keys - R001)
- **2** Reversible key (2 keys included - R001)
- **3** Reversible key (keyed differently - 2 keys included)
- **4** Standard key (No keys - CH751)
- **5** Standard key (2 keys included - CH751)
- **6** Standard key (keyed differently - 2 keys included)
- **9** No Lock Plug installed (See notes for more information)

KC Key Codes

(Omit for Locking Options 0, 1, 2, 4, 5 and 9)

- *__KD10__ Keyed Differently (Only used if L =3 or 6)
- *__MK10__ Master Keyed Differently (Only used if L =6)

*Supplied in multiples of 10 with 10 different key codes

Notes:

For lock core selection, detailed key information and a complete overview of the *SOUTHCO*® Key-Choice System see PK Lock Cores section.

For unique key code options, please contact Southco.

AC-30 Multi Point Actuator

Push-Button

- **Single or multi-point actuation capability**
- **Accommodates wide panel thickness**
- **Multiple key code options**
- **Single hole install**

Material and Finish

Button: Nylon
Housing: Zinc or Stainless steel
Lock Plug: Zinc
Cam, Washer, Rivet:
Stainless steel, passivated

Notes

For cable configuration, see Cable Selection Tool on Southco.com

With cam attachment shown

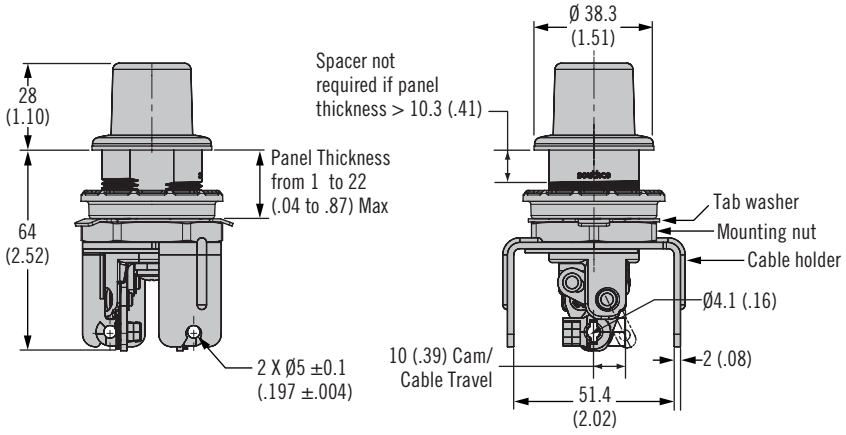

Without cam attachment shown

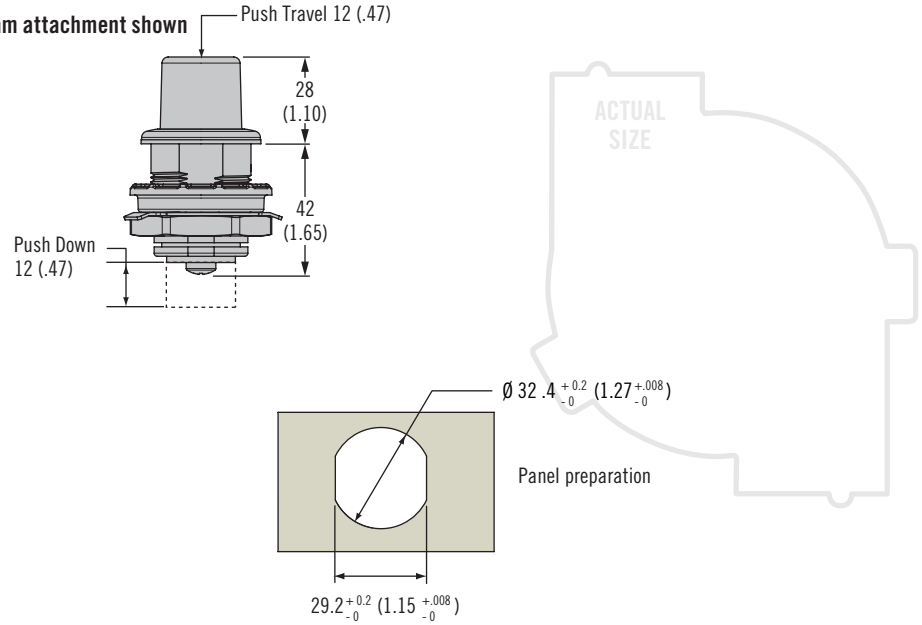

Part Number Selection

E End Style
1 With Cam attached
3 Without Cam attachment

H Housing Material
1 Zinc alloy with black powder coat
3 Stainless steel with black powder coat

B Button Material
1 Nylon, black

AC - 30 - E L M - H B - KC

L Locking Option
0 Non-locking
1 Reversible key (No keys - R001)
2 Reversible key (2 keys included - R001)
3ł Reversible key (Multiple key codes - 2 keys included)
4 Standard key (No keys - CH751)
5 Standard key (2 keys included - CH751)
6ł Standard key (Multiple key codes - 2 keys included)
7 14603 Key code option
9 No lock plug installed

K Key Codes
(Omit for locking options 1,2,4 and 5)
KD10 Keyed differently (10 codes)
MK10 Master keyed, keyed differently

M Mounting Method
1 With spacer mounting (must have if glass panel)
2 Without spacer mounting

ł Require KC key codes extension

AC-40 Multi Point Actuator

Push-Button Handle

- **Single or multi-point actuation capability**
- **Accommodates wide panel thickness**
- **Multiple key code options**
- **Easy Grip**

Material and Finish

Button: Nylon
Housing: Zinc Alloy or Stainless steel
Lock plug: Zinc Alloy
Cam, Washer, Rivet: Stainless steel, passivated

Notes

For cable configuration, see Cable Selection Tool on Southco.com

With cam attachment shown

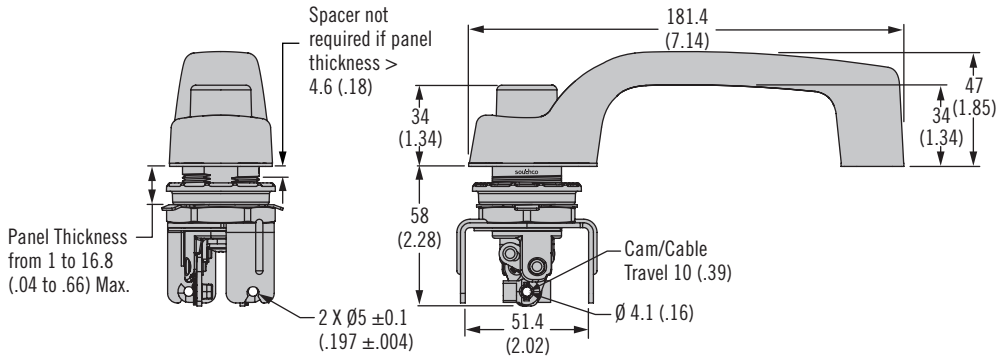

Without cam attachment shown

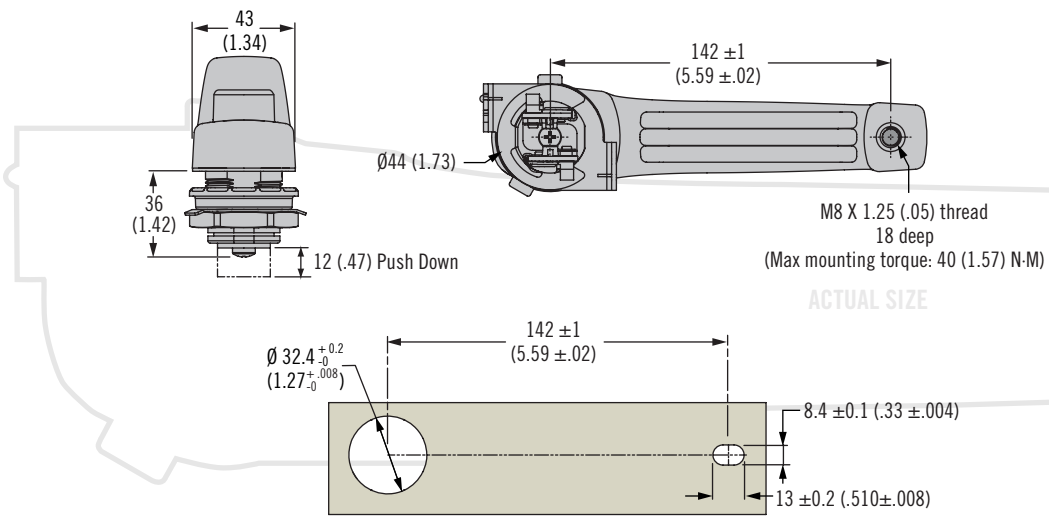

Part Number Selection

E **End Style**
1 With Cam attached
3 Without Cam attachment (Mounting method 1 or 2 only)

H **Handle Material**
1 Black GF nylon with zinc housing insert
2 Black GF nylon with stainless steel housing insert

B **Button Material**
1 Nylon, black

AC - 40 - E L M - H B - KC

L **Locking Option**
0 Non-locking
1 Reversible key (No keys - R001)
2 Reversible key (2 keys included - R001)
3ł Reversible key (Multiple key codes - 2 keys included)
4 Standard key (No keys - CH751)
5 Standard key (2 keys included - CH751)
6ł Standard key (Multiple key codes - 2 keys included)
7 14603 Key code option
9 No lock plug installed

ł Require KC key codes extension

K **Key Codes**
(Omit for locking options 1,2,4 and 5)
KD10 Keyed differently (10 codes)
MK10 Master keyed, keyed differently

M **Mounting Method**
1 Cable parallel (or no cable), with spacer mounting (must have if glass panel)
2 Cable parallel (or no cable), without spacer mounting
3* Cable cross with spacer mounting (must have if glass panel)
4* Cable cross without spacer mounting
*For end style 1 only

Dimensions in millimeters (inch) unless otherwise stated

AC Single Point Actuator

T-handle

- **Surface mount installation**
- **Generous grip area**
- **Pull to activate**

Material and Finish

Housing: PC/ABS, black
T-handle and slide: Glass-filled nylon, black
Clip: Acetal, black
Spring: Stainless steel, passivated

Notes

For cable configuration, see Cable Selection Tool on Southco.com

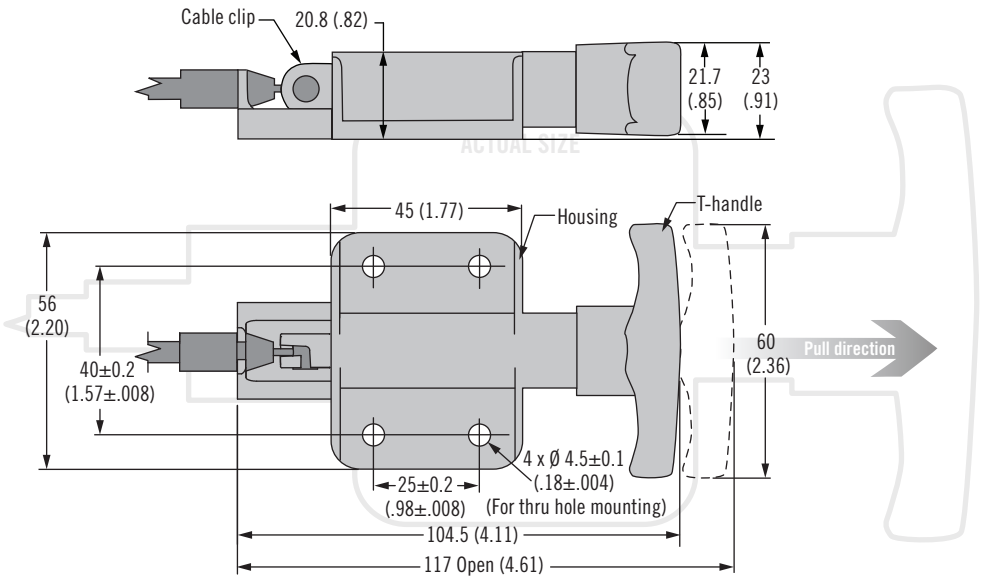

Part Number
AC-60-101-11

www.southco.com/AC

AC Single Point Actuator

Plastic paddle and housing

- **Front mount installation**
- **Flush**
- **Two cable mounting options**

Material and Finish

Paddle and housing: Glass-filled nylon, black
Spring: Stainless steel, passivated

Notes

For cable configuration, see Cable Selection Tool on Southco.com

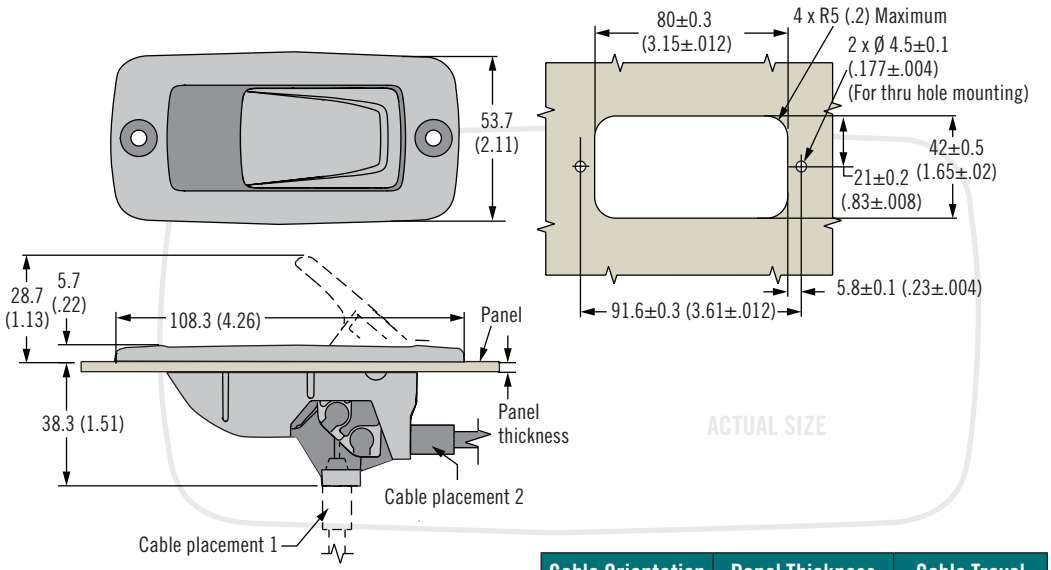

Part Number
AC-70-101-11

Cable Orientation	Panel Thickness	Cable Travel
Placement 1	12.5 (.49) maximum	11.1 (.44)
Placement 2	16 (.63) maximum	13.2 (.52)

Dimensions in millimeters (inch) unless otherwise stated

southco®

AC Single Point Actuator
Push-button

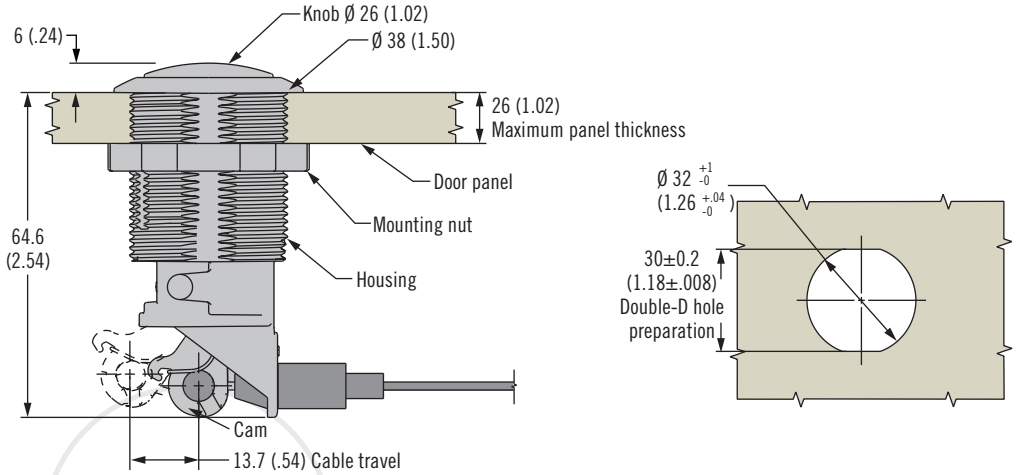

Part Number
AC-80-101-11

- **Flush**
- **Mounting hardware included**

Material and Finish

Push button and housing:
PC/ABS, black
Cam: Glass-filled nylon, black
Spring: Stainless steel, passivated

Notes

For cable configuration, see Cable Selection Tool on Southco.com

www.southco.com/AC

AC Single Point Actuator
Aluminum paddle and housing

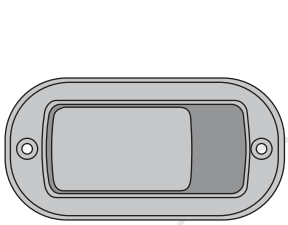

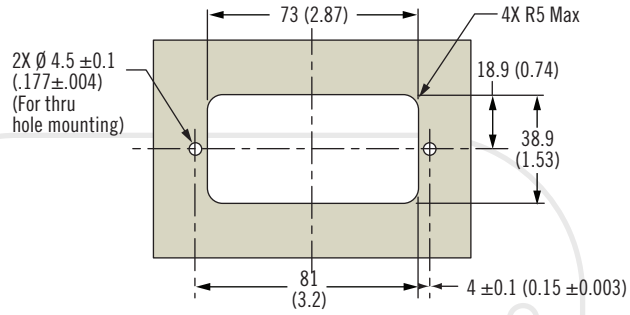

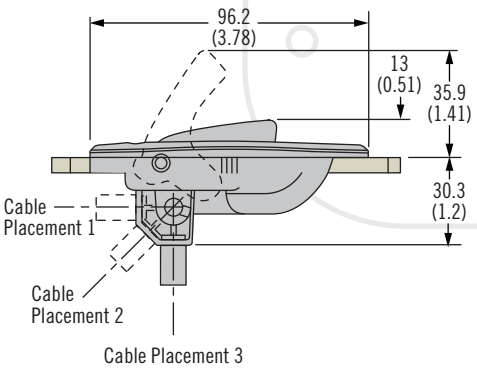

ACTUAL SIZE

Part Number
AC-75-101-11

Cable Orientation	Panel Thickness	Cable Travel
Placement 1	12.5 (.49) max.	11.1 (.44)
Placement 2	16 (.63) max.	13.2 (.52)
Placement 3	16 (.63) max.	13.2 (.52)

- **Front mount installation**
- **Three cable mounting options**
- **Low profile**
- **Robust material**

Material and Finish

Paddle and housing:
Aluminum, black powder coated

Notes

For cable configuration, see Cable Selection Tool on Southco.com

Part Number

See table

AC-50 Single Point Actuator

Squeeze handle

- **Single actuation capability**
- **Accomodates tubular construction or rounded mounting surfaces**

Material and Finish

Housing, handle: Glass-filled nylon, black

Installation Notes

Installation torque of screws not to exceed 2 N·m maximum (Countersunk screws or rivets recommended)

Notes

For cable configuration, see Cable Selection Tool on Southco.com

Squeeze Handle

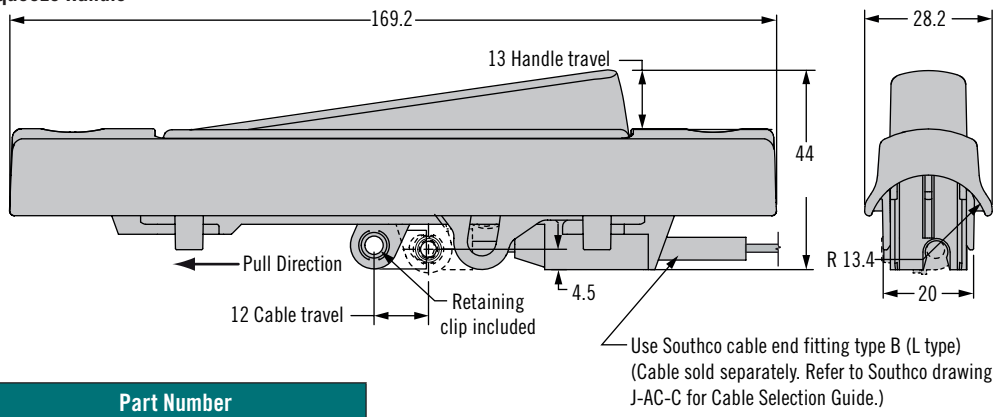

Part Number
AC-50-101-11

Panel Preparation

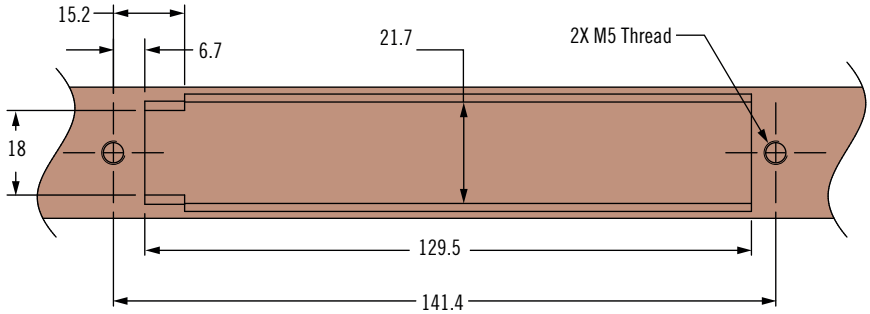

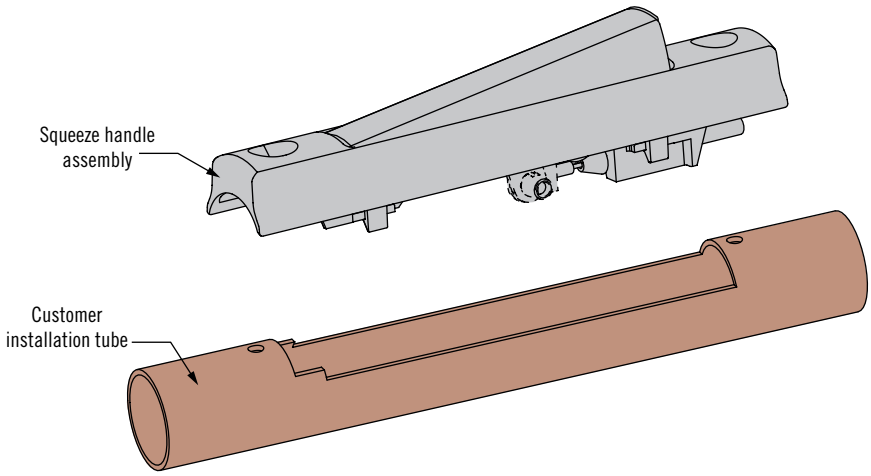

Dimensions in millimeters (inch) unless otherwise stated

AC Single Point Actuators

Stainless Steel · M1 Style Actuator

38mm (1.5”)

Shown actual size

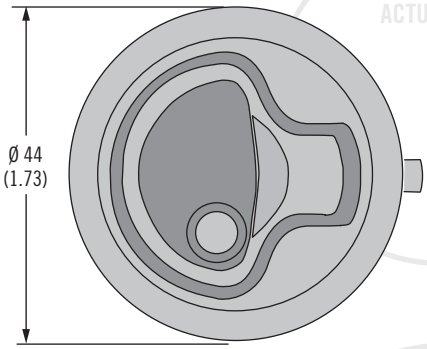

50mm (2”)

Shown actual size

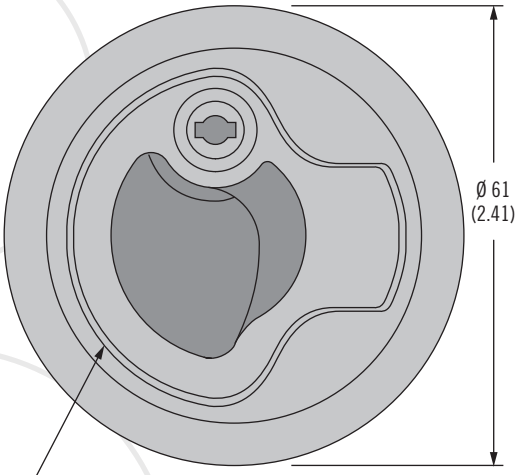

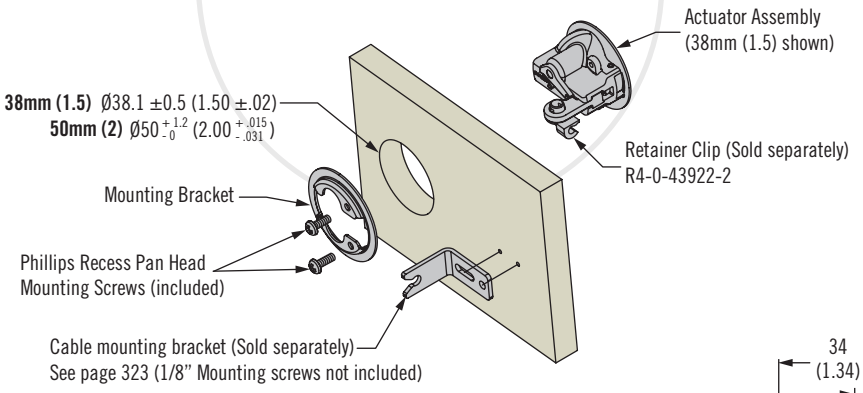

Size	Actuator Assembly	Part Number	Door Thickness	Cable Mounting Bracket
38mm (1.5)	Locking (2 keys supplied)	AC-M1-15-41-8	9 mm	R4-0-50253-1
			12 mm	R4-0-50253-2
	Non-Locking	AC-M1-15-61-8	9 mm	R4-0-50253-1
			12 mm	R4-0-50253-2
50mm (2)	Locking (2 keys supplied)	AC-M1-42-8	9 mm	R4-0-50253-1
		AC-M1-43-8	12 mm	R4-0-50253-2
	Non-Locking	AC-M1-62-8	9 mm	R4-0-50253-1
		AC-M1-63-8	12 mm	R4-0-50253-2
	Key-Locking keyed alike S008	AC-M1-72-8	9 mm	R4-0-50253-1
		AC-M1-73-8	12 mm	R4-0-50253-2

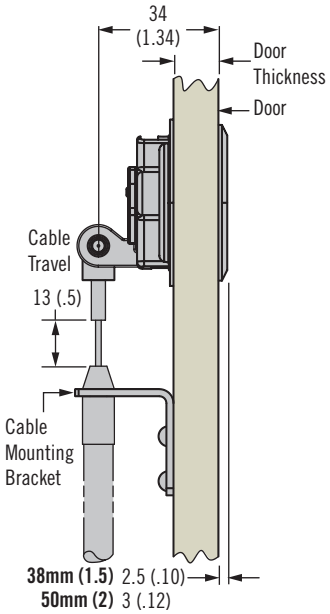

- **Single, round-hole installation**
- **Locking style restricts access**
- **Premium finish and corrosion resistance**

Material and Finish

Latch: 316 grade stainless steel, bright polished
Spacer: Nylon, black
Contact Southco for other finishes

Accessories - 38mm (1.5”)

Spacer: M1-510-96-1
Mounting screws: M1-510-96-4

One key supplied per latch for additional keys order M7-88-9121324-S

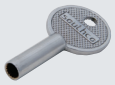

Accessories - 50mm (2”)

For lock style 4
Key (pair)
Part number: M1-546

For lock style 7
Overmolded key S008 (pair)
Part number:
M1-525-39-S008

Cables

For cable configuration, see Cable Selection Tool on Southco.com

64 Push-to-Close Actuator

Pull-to-open · Paddle handle actuator · Multi-point · Large

- **Flush mounting installation**
- **Multiple mounting styles**
- **Locking and Non-Locking options**

Material and Finish

Stainless steel, polished, steel, zinc plated or black powder coated

Accessories

Flat key, keyed alike CH751
(2 keys per ring)
Part number: PK-10-01

Overmolded key, keyed alike CH751
(2 keys per ring)
Part number: PK-10-01-05

Notes

For cable configuration, see Cable Selection Tool on Southco.com

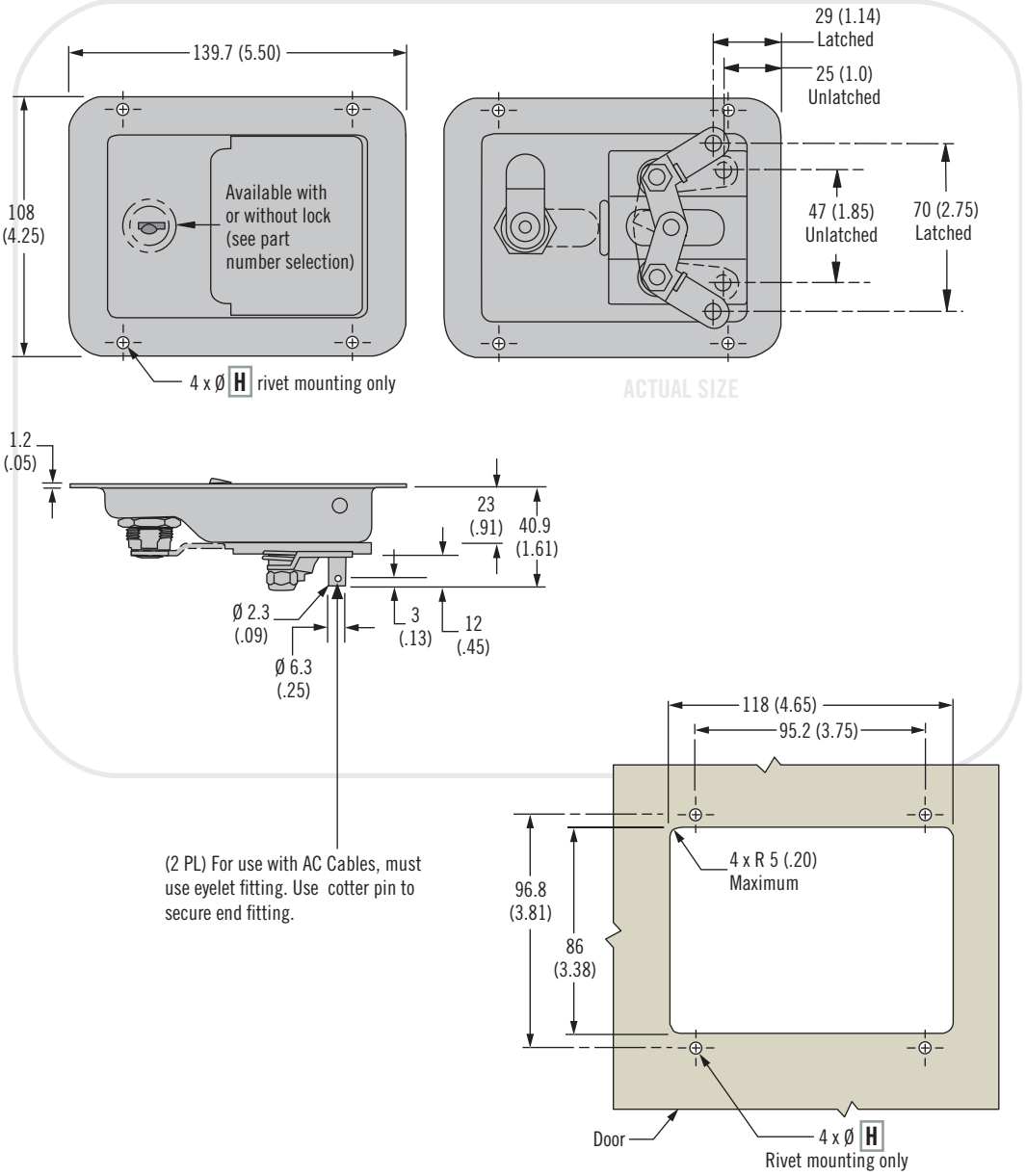

Part Number Selection

H Housing
- **0** Weld
- **1** Rivet through hole 4.9 (.19)
- **2** Rivet through hole 5.2 (.20)

M Material
- **10** Steel, zinc plated
- **20** Stainless steel, polished
- **50** Steel, black powder coated

64 - 40 - 4 L H - M

L Lock style
- **0** Non-locking
- **1** Key-locking keyed alike CH751 (2 Flat keys supplied)

Dimensions in millimeters (inch) unless otherwise stated

AC Cable Splitter

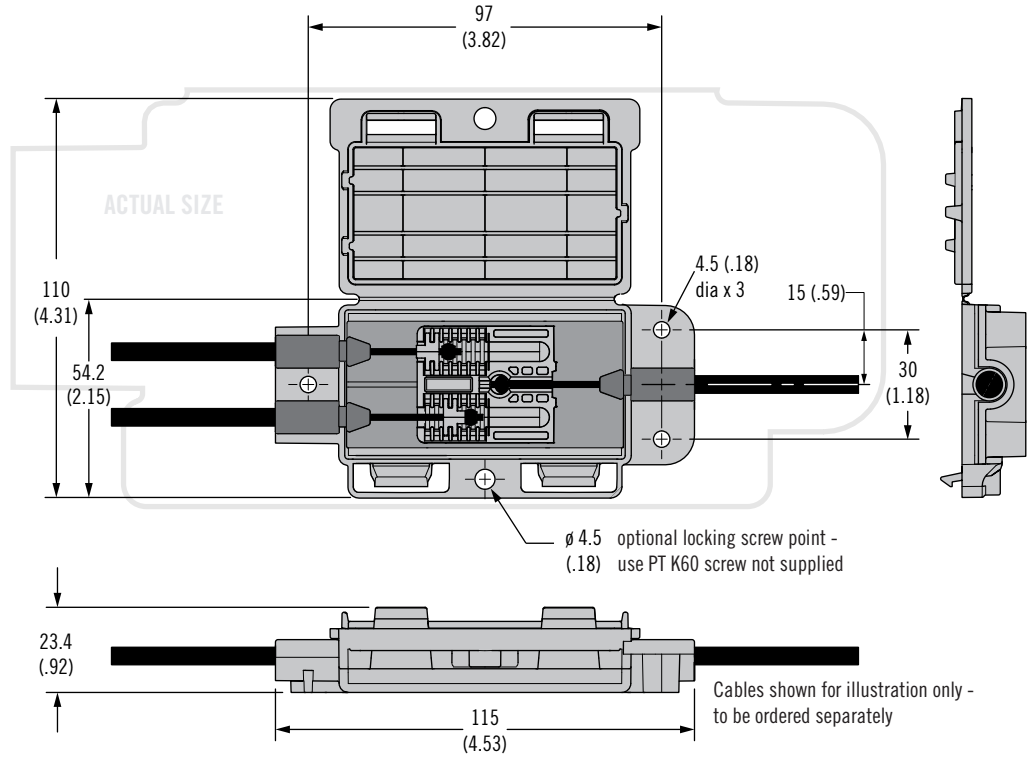

- **Allows one actuation point for two rotary latches or two actuation points for one rotary latch**
- **Adjustable to fine tune timing of actuation points**
- **Cable splitter and cables sold separately**

Material and Finish

Housing: Black Polypropylene
Slider: Black Glass-filled nylon

Notes

For cable configuration, see Cable Selection Tool on Southco.com

Packaged Delivery Condition

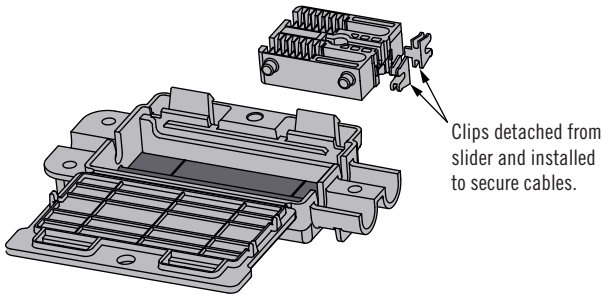

After customer assembly

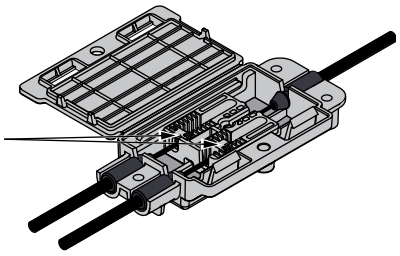

One actuation point for two rotary latches

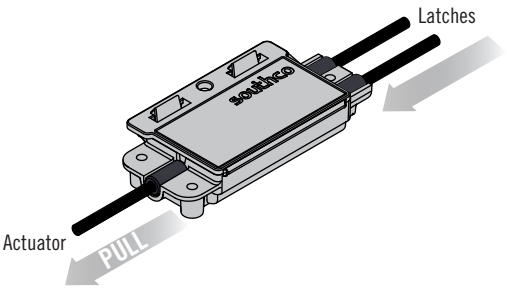

Two actuation points for one rotary latch

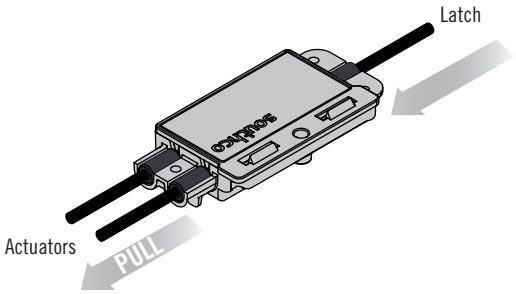

Part Number
AC-05-301-11

AC Rotary Latch Cables

Cable Assembly

- **Connecting actuators with rotary latches**
- **Standard offering of cable assemblies**

Material and Finish

Cable: Stainless steel

Liner: Acetal

Jacket: Polypropylene

Cable Assembly Part Number Selection

S **Spring Option (Rotary End Only)**
0 Without Spring
1 With Spring (Cable Types 6 & 7 only)

TTT **Cable Extension Value (mm)**
Must be 3 digits. Example 79 mm, **TTT** = 079

A **Rotary Latch Actuator Fitting Type**

AC - C A R S - Y - L - TTT

R **Rotary Latch Fitting Type**

Y **Cable Type**
(See next page)
Omit -TTT if Cable Type 1 or 2 Selected

L Cable Length (mm)
Must be 4 digits. Example: 250mm, **L** = 0250

Fitting Type													
Barrel Fitting		L Fitting		Z Fitting		Eyelet Fitting		Ball Fitting		Threaded Fitting		Bare Cable	
		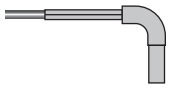		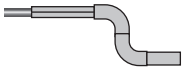		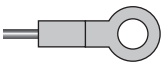							
A & R	**Material**	**A & R**	**Material**	**A & R**	**Material**	**A & R**	**Material**	**A & R**	**Material**	**A & R**	**Material**	**A & R**	**Material**
A	Die-Cast	B	Plated Steel	C	Plated Steel	D	Stainless Steel	H	Stainless Steel	E	Steel, M4	0	Stainless Steel
J	Stainless Steel	K	Stainless Steel							F	Steel, 8-32		

Straight Line of Sight

When cable is routing in a direct pull line between the actuator and the rotary latch with NO bends or concerns for accidental opening.

CABLE TYPE 1 - Bare Cable

CABLE TYPE 2 - Coated Cable for Appearance

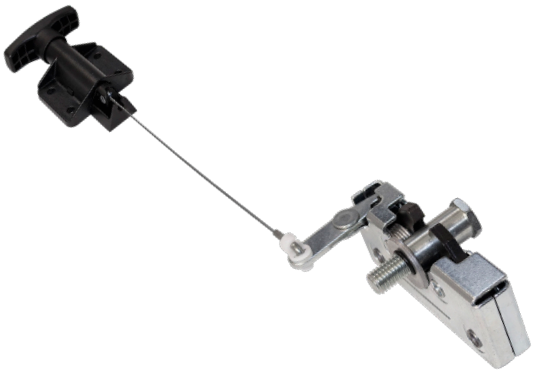

Protected Cable Routing

Use when cable routing requires bending, cable management brackets or spring assist. Provides protection from accidental opening and for routing through bulk heads. For most applications the minimum bend radius is 50.8 mm (2 inches).

For use with Mechanical Latches

CABLE TYPE 6 - Jacketed Cable with Snub End Coupling and Threaded Retainer

- Snub end mounts to all Southco actuators and mounting brackets
- Threaded end offers adjustable conduit mounting on latch end

Snub **Threaded**

CABLE TYPE 7 - Jacketed Cable with Snub and Conical End Couplings

- Snub end mounts to all Southco actuators and mounting brackets
- Conical end mounts to Rotary with integrated bracket or separate mounting bracket

Snub **Conical**

For use with R4-EM Latches

CABLE TYPE 4 - Jacketed Cable with Threaded and Snap Ring Retainer

- Threaded end offers adjustable conduit mounting on actuator end
- Snap ring retainer for connection to R4-EM electronic latches

Threaded **Snap Ring**

CABLE TYPE 5 - Jacketed Cable with Conical End Coupling and Snap Ring Retainer

- Conical end mounts to most Southco actuators or separate mounting bracket
- Snap ring retainrer for connection to R4-EM electronic latches

Conical **Snap Ring**

Retainer Clip

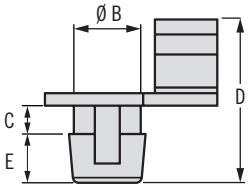

- **For use with Ø 4 (.157) rod or Southco cable assembly**

Material and Finish

Clip: Acetal

Bracket: Steel

Part Number

See table

Latch Series	Trigger / Lever Type	Part Number	Color	B	C	D	E	Trigger / Lever Hole Diameter	Trigger / Lever Thickness
R4-05	Bottom	R4-0-60784	Beige	5.9 (.23)	3.5 (.13)	16.4 (.65)	2.8 (.11)	6.4 (.25)	3 (.12)
R4-10	Perpendicular In-line Two Point	R4-0-43922	Black	5.9 (.23)	2.5 (.10)	14.4 (.57)	4.3 (.17)	6.3 (.25)	2 (.08)
		R4-0-43922-3	Red						
	Bottom / Top	R4-0-43922-2	Black	5.9 (.23)	4.5 (.18)	16.4 (.65)	4.3 (.17)	6.3 (.25)	4 (.16)
	Dual Trigger	R4-0-43922	Black	5.9 (.23)	2.5 (.10)	14.4 (.57)	4.3 (.17)	6.3 (.25)	2 (.08)
		R4-0-43922-3	Red						
		R4-0-43922-2	Black	5.9 (.23)	4.5 (.18)	16.4 (.65)	4.3 (.17)	6.3 (.25)	4 (.16)
R4-30	Perpendicular Two Point	R4-0-43922	Black	5.9 (.23)	2.5 (.10)	14.4 (.57)	4.3 (.17)	6.3 (.25)	2 (.08)
		R4-0-43922-3	Red						
	Bottom	R4-0-43922-2	Black	5.9 (.23)	4.5 (.18)	16.4 (.65)	4.3 (.17)	6.3 (.25)	4 (.16)
R4-20	Bottom	R4-0-43922-1	White	6.3 (.25)	4.5 (.18)	16.4 (.65)	4.3 (.17)	6.7 (.26)	4 (.16)
R4-50	Perpendicular								
R4-75	In-line	AC-9BX-20-34	Black	7.7 (.30)	2.9 (.11)	14.7 (.58)	3.3 (.13)	8.0 (.31)	2.7 (.11)

Cable Mounting Bracket

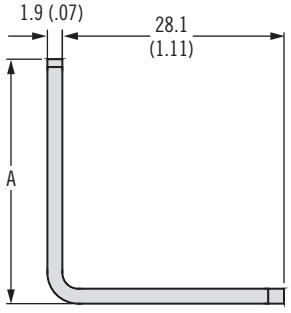

Part Number	A
R4-0-50253-1	31 (1.22)
R4-0-50253-2	28 (1.10)
R4-0-50253-3	19 (.75)

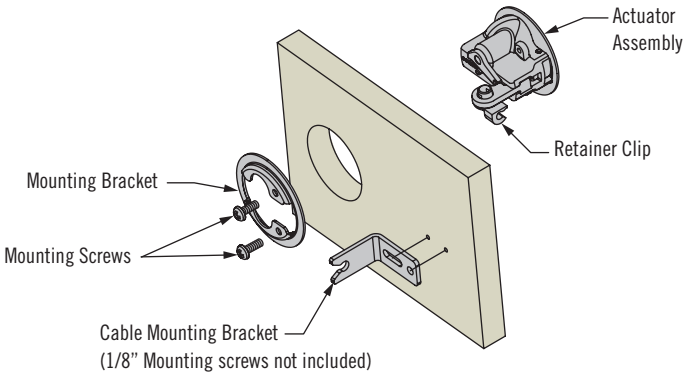

DRAW LATCHES

Over-Center/ Under-Center

Pages 328-347

The expanded line of *SOUTHCO®* draw latches provides numerous options of over-center and under-center designs. Choose your ideal solution based on working load, space constraints, and styling considerations.

- Stylized latches are available for better aesthetic presentation
- Functional designs provide both economical and high strength solutions
- Curved wire bail or claw designs provide added resilience under shock loads

V7

V2

97

TL

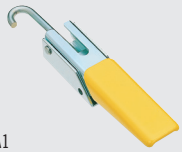
A1

91

Rotary

Pages 348-353

Rotary cam design provides mechanical advantage to deliver a high degree of draw action for a firm grip and consistent closure that resists accidental opening. Compact all-metal construction provides high strength in low profile designs for co-planar and off-plane applications.

- Simple lift and turn action
- Consistent pull-up for gasket compression
- Multiple actuation styles

K2

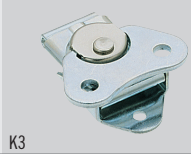
K3

K4

K5

Concealed

Pages 354-356

These high strength latch designs mount behind or within thicker mating panels for concealed operation. Their tool-actuated operation provides strong pull-up action to compress gasketing for airtight and watertight seals. Multiple mounting options fit butt-joint and right-angle applications.

- Heavy-duty clamping force
- Provides for air and watertight seals
- Multiple mounting options

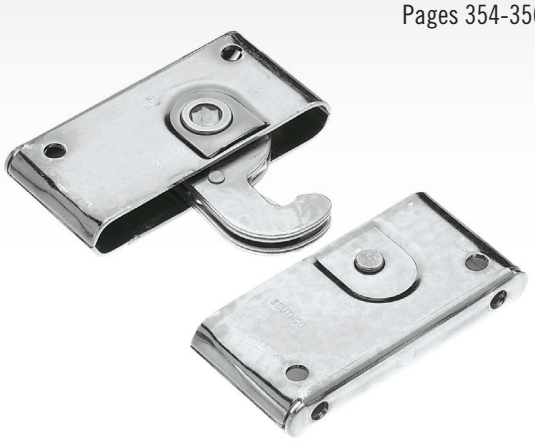

R2

R5

Flexible

Pages 357-363

SOUTHCO® flexible draw latches use thermoplastic elastomer or rubber handles to provide latching flexibility, pull panels tight, absorb/reduce vibration, and maintain tension on the closed latch.

- Non-corrosive materials suitable for indoor or outdoor use
- Over-center style for consistent easy latching

37

F7

37

C7

Draw Latches

Selection guide

Use this selection guide to choose the right draw latch for your application

Key-Locking Available

Padlockable

Stainless Steel

Vibration Resistant

			MATERIAL			INSTALLATION	
		Latching Series	Stainless Steel	Zinc or Steel	Plastic and Rubber	Exposed Mounting	Concealed Mounting
OVER-CENTER PAGES 328-343		V7		✔			✔
		97	✔	✔		✔	✔
		V2, V4	✔	✔		✔	
		TL	✔	✔		✔	✔
		A1	✔	✔		✔	✔
		07			✔		✔
UNDER-CENTER PAGES 344-347		91	✔	✔		✔	✔
ROTARY PAGES 348-353		K2	✔	✔		✔	
		K3, K4, K5	✔	✔		✔	
CONCEALED PAGES 354-356		R2		✔			✔
		R5		✔			✔
FLEXIBLE PAGES 357-363		C7			✔		✔
		37 Lever			✔	✔	
		F7			✔	✔	✔
		37 Pull			✔	✔	

Dimensions in millimeters (inch) unless otherwise stated

PERFORMANCE					ACCESS STYLE			
Co-Planar	Non Co-Planar	Fixed Grip	Adjustable Grip	Vibration Resistance	Key-Locking	Tool Access	Padlockable	Secondary Locking
✔		✔		✔	✔			
✔		✔		✔			✔	✔
✔		✔		✔			✔	
✔		✔		✔			✔	✔
✔			✔	✔			✔	
✔		✔		✔				✔
✔	✔		✔	✔			✔	✔
✔	✔	✔		✔				
✔	✔	✔		✔	✔	✔	✔	
✔			✔	✔		✔		
✔		✔		✔		✔		
✔		✔		✔				
✔		✔		✔				
✔	✔	✔		✔				
✔	✔	✔		✔				

V7 Draw Latch

Over-center · Stainless steel

- **Sleek, smooth low profile design**
- **Locking and non-locking**
- **Robust, riveted, tamper-resistant construction**

Material and Finish

316 Grade stainless steel electropolished

Performance Details

Maximum working load: 1200 N (270 lbf)

Installation Notes

Install latch with four M3 (No.4) flat head screws and keeper with two M3 (No.4) round head screws (not supplied)

Keys

Overmolded key S008 (pair)
Part number: M1-525-39-S008

Part Number

See table

Assembly complete with keeper

Latch

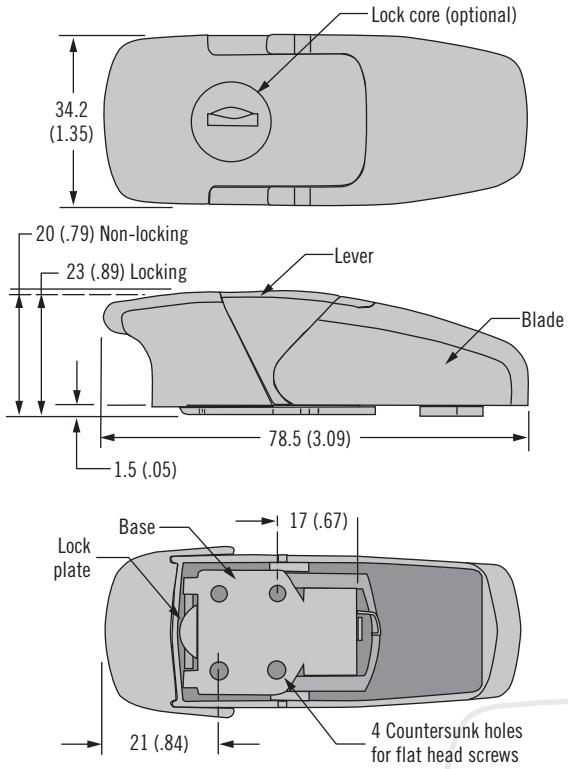

Keeper

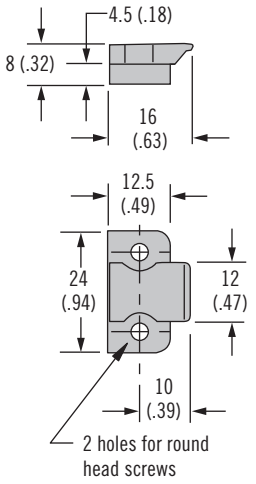

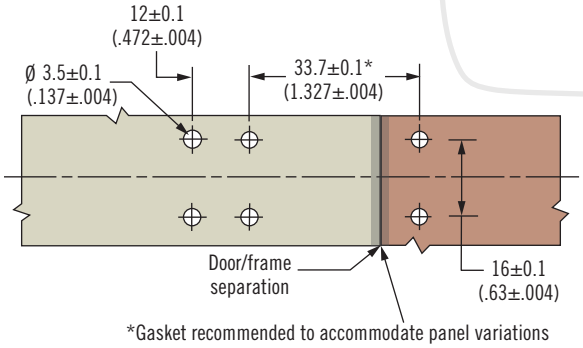

ACTUAL SIZE

Description	Part Number
Non-locking	V7-20-101-24
Locking keyed alike key code S008 (2 keys supplied)	V7-20-111-24

Dimensions in millimeters (inch) unless otherwise stated

V7 Draw Latch

Over-center · Zinc alloy

Latch

Large

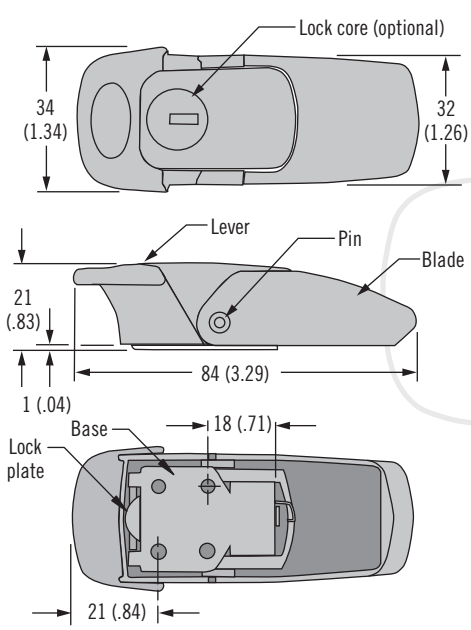

Keeper

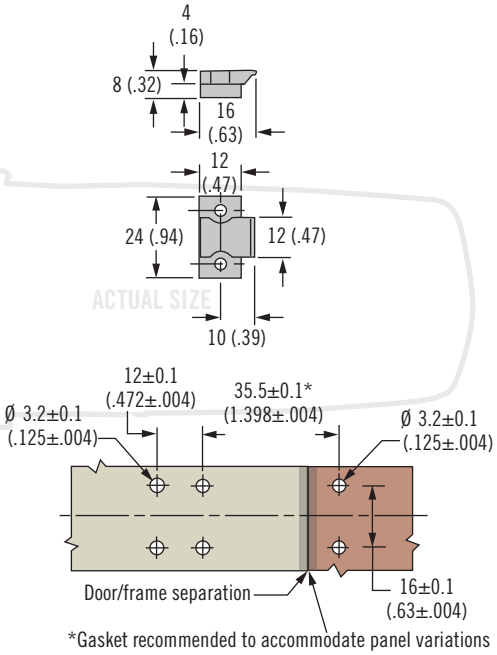

Latch

Small

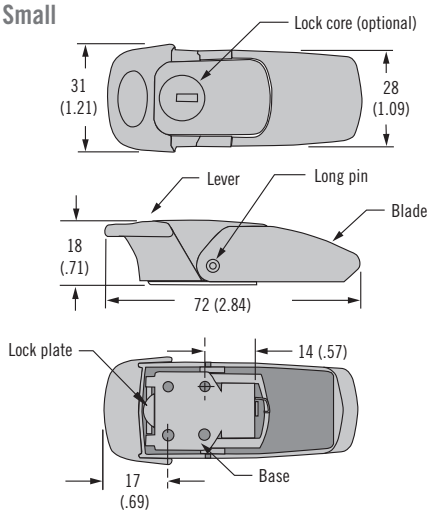

Keeper

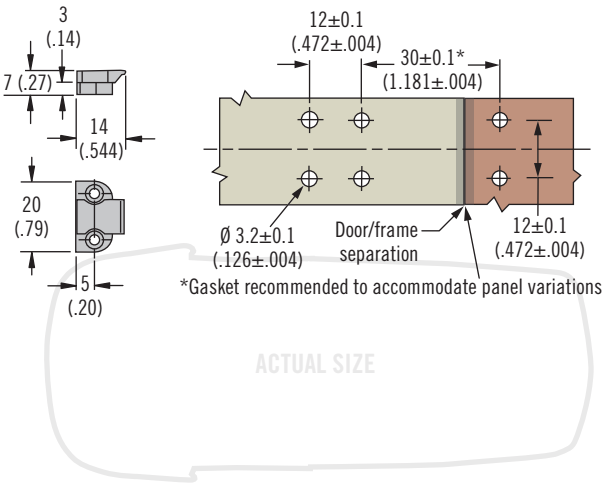

Description	Part Number		
	Bright Chrome	Satin Chrome	Black Powder Coated
Small, non-locking	V7-10-105-10	V7-10-105-20	V7-10-105-50
Small, locking (2 keys supplied)	V7-10-115-10	V7-10-115-20	V7-10-115-50
Large, non-locking	V7-20-101-10	V7-20-101-20	V7-20-101-50
Large, locking (2 keys supplied)	V7-20-111-10	V7-20-111-20	V7-20-111-50

- **Sleek, smooth low profile design**
- **Locking and non-locking**
- **Robust, riveted, tamper-resistant construction**

Material and Finish

Zinc alloy, chrome plated or powder coated and stainless steel

Performance Details

Maximum working load:
1200 N (270 lbf)

Installation Notes

Install latch with four M3 (No.4) flat head screws and keeper with two M3 (No.4) round head screws (not supplied)

Keys

Key code S010 (pair)
Part number: V7-KEYS

Part Number

See table

Assembly complete with keeper

97 Draw Latch

Over-center

- **Compact latch**
- **Multiple keeper options for application variances**

Material and Finish

Stainless steel or steel, zinc plated

Performance Details

Clamping force: 135 N (30 lbf)

Installation Notes

Install assembly with M3 (No. 4) round head screws or 3 (.118) rivets (not supplied)

For peg style keeper use M3 (No. 4) flat head screws or rivets

Part Number

See table

Order latch and keeper separately

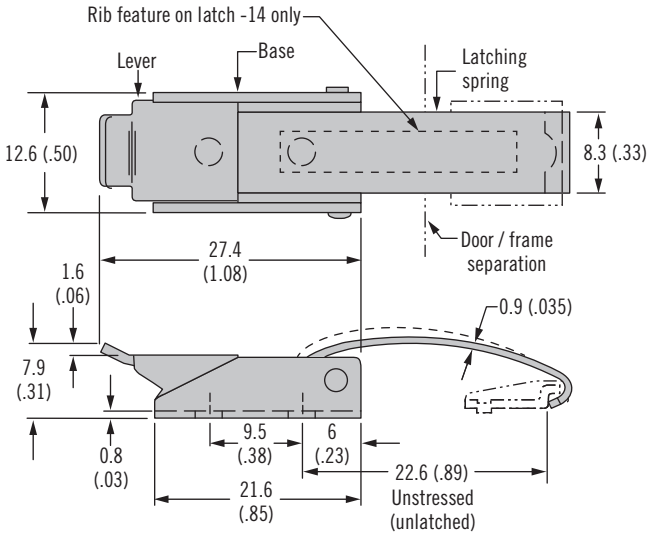

Keepers

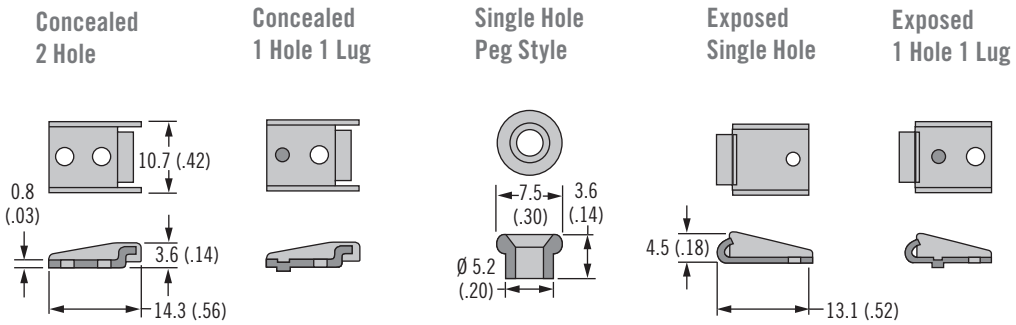

Two Hole Keepers

Single Hole Keepers

Latch Only

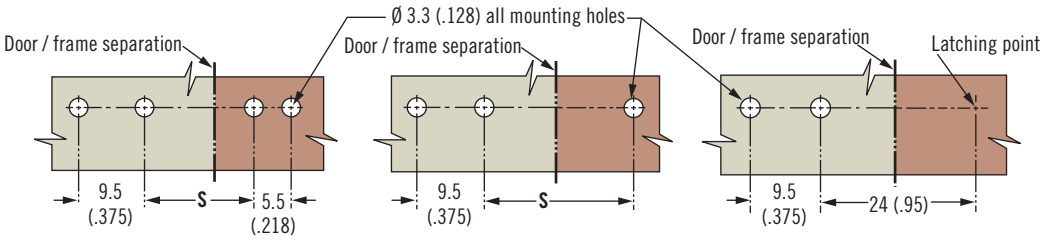

Material	Part Number					
	Latch Only	Keepers				
		Concealed 2 Hole	Concealed 1 Hole 1 Lug	Single Hole Peg Style	Exposed Single Hole	Exposed 1 Hole 1 Lug
Steel	97-30-160-11	97-37-103-11	97-37-101-11	97-37-105-11	97-37-104-11	97-37-102-11
Stainless Steel	97-30-160-12	97-37-103-24	97-37-101-24	97-37-105-24	97-37-104-24	97-37-102-24
	97-30-160-14*					
S Dimension		14.7 (.58)	14.7 (.58)	21.8 (.86)	33 (1.30)	27.4 (1.08)

Dimensions in millimeters (inch) unless otherwise stated

97 Draw Latch
Over-center

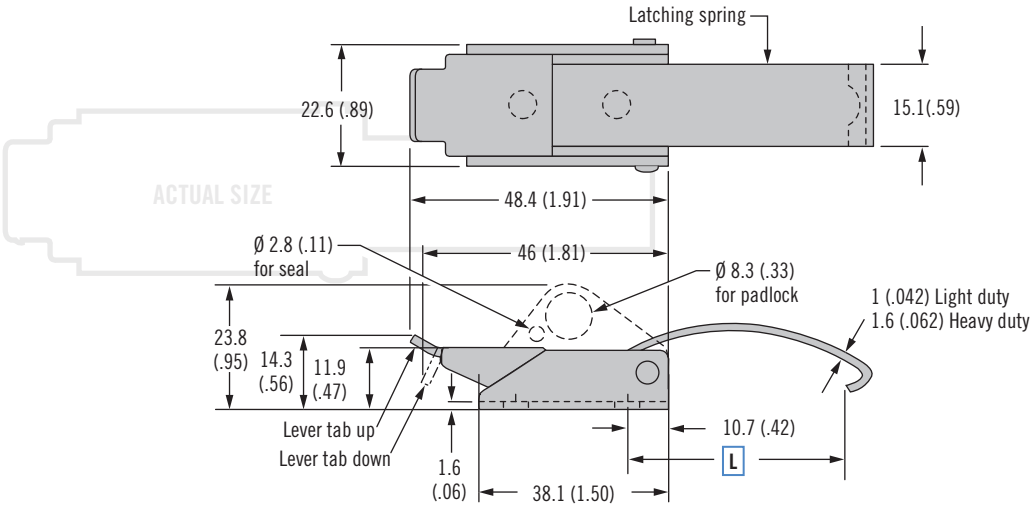

- **Multiple link and keeper options for application variances**
- **Secondary locking style available**

Material and Finish

Stainless steel, steel, zinc plated or steel, black powder coated

Performance Details

Heavy-duty:
Clamping force: 670 N (150 lbf)

Light-duty:
Clamping force: 310 N (70 lbf)

Installation Notes

Install assembly with M4 (No. 8) round head screws or 4 (.156) rivets (not supplied). Peg needs flat head.

Accessories

Spring loaded secondary catch provides resistance against severe vibration and accidental opening.
Part number steel: 97-58-101-11
Part number stainless steel: 97-58-101-25

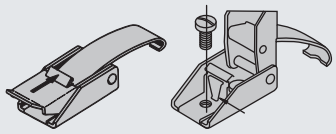

Keepers

Concealed 2 Hole

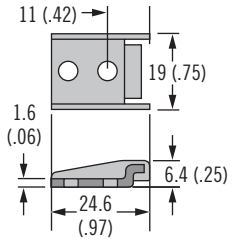

Single Hole Peg Style

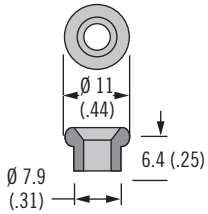

Exposed Single Hole

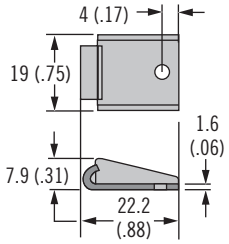

Exposed 1 Hole 1 Lug

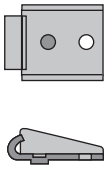

Two Hole Keepers

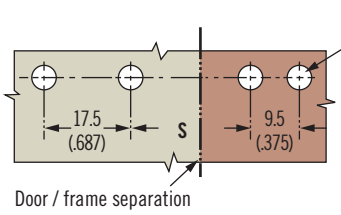

Single Hole Keepers

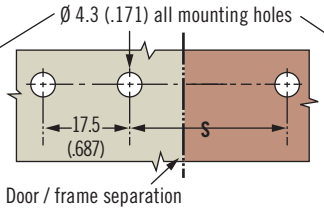

Latch Only

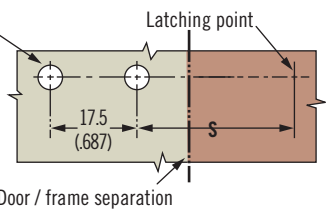

Part Number Selection

Order latch and keeper separately

For latch part number see builder

For keeper part number see table

S Style
1 Lever tab up
2 Lever tab down
3 Padlockable (tab up)

L Latching spring length/thickness
1 Short (light-duty)
2 Medium (light-duty)
3 Long (light-duty)
5 Short (heavy-duty)
6 Medium (heavy-duty)
7 Long (heavy-duty)

97 - 50 - S L 0 - 1 M

Part Number for Latch Only
(No Keeper)

M Material
1 Steel, zinc plated
2 Stainless steel (light-duty only)
5 Steel, black powder coated

Keeper Style	Keeper Part Number		S Dimension		
	Steel	Stainless Steel	Short Link L = 29.4 (1.16)	Medium Link L = 42.1 (1.66)	Long Link L = 54.8 (2.16)
Concealed 2 hole	97-57-103-11	97-57-103-24	15.9 (.63)	28.6 (1.13)	41.3 (1.63)
Single hole peg style	97-57-105-11	97-57-105-24	29.4 (1.16)	42.1 (1.66)	54.8 (2.16)
Exposed single hole	97-57-104-11	97-57-104-24	47.6 (1.88)	60.3 (2.38)	73.0 (2.88)
Exposed 1 hole 1 lug	97-57-102-11	97-57-102-24	38.1 (1.50)	50.8 (2.00)	63.5 (2.50)
Latch only			31.8 (1.25)	44.5 (1.75)	57.1 (2.25)

97 Draw Latch

Over-center

- **Multiple keeper options for application variances**

Material and Finish

Steel, zinc plated or steel powder coated black

Performance Details

Clamping force: 290 N (65 lbf)

Installation Notes

Install assembly with M5 (No. 10) round head screws (not supplied) or 5 (3/16) rivets

For peg style keeper use M5 (No. 10) flat head screws or rivets

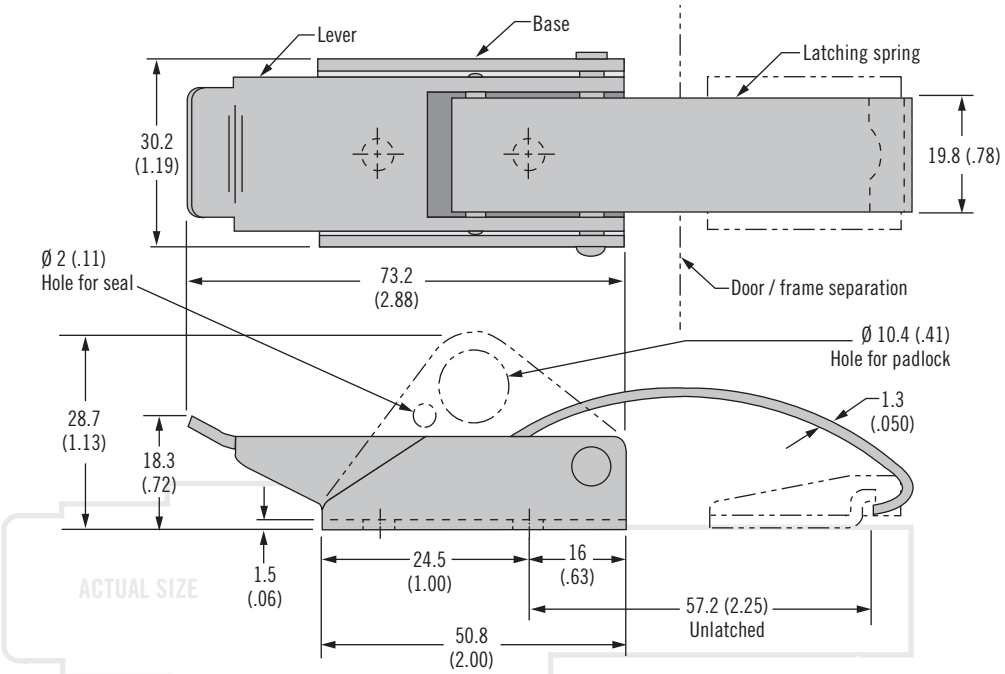

Keepers

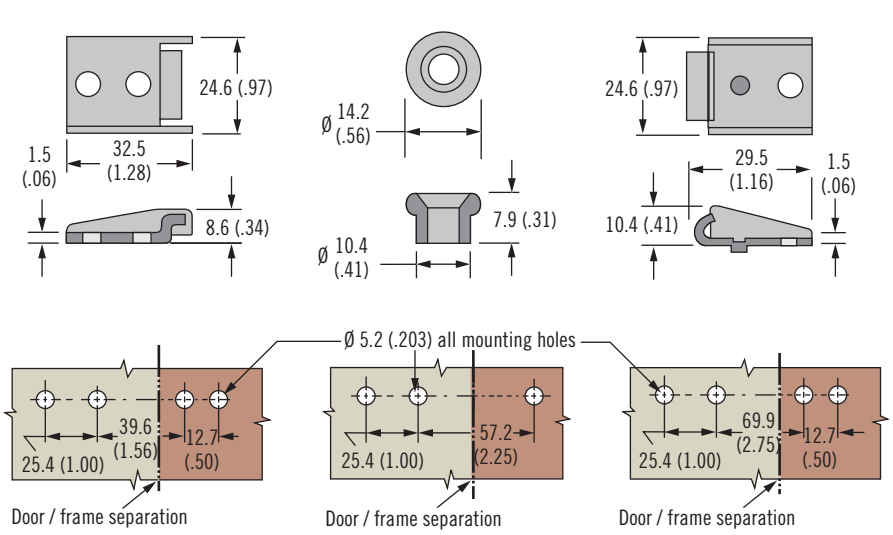

Part Number

See table

Order latch and keeper separately

Material	Latch Part Number	
	Lever Tab Up	Padlockable
Steel, Zinc Plated	97-60-120-11	97-60-320-11
Steel, Black Powder Coated	97-60-120-15	97-60-320-15

Latch Only

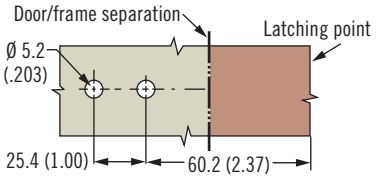

Material	Keeper Part Number		
	Concealed 2 Hole	Single Hole Peg Style	Exposed 1 Hole 1 Lug
Steel, Zinc Plated	97-67-103-11	97-67-105-11	97-67-104-11
Steel, Black Powder Coated	97-67-103-15	97-67-105-15	97-67-104-15

Dimensions in millimeters (inch) unless otherwise stated

97 Draw Latch
Over-center

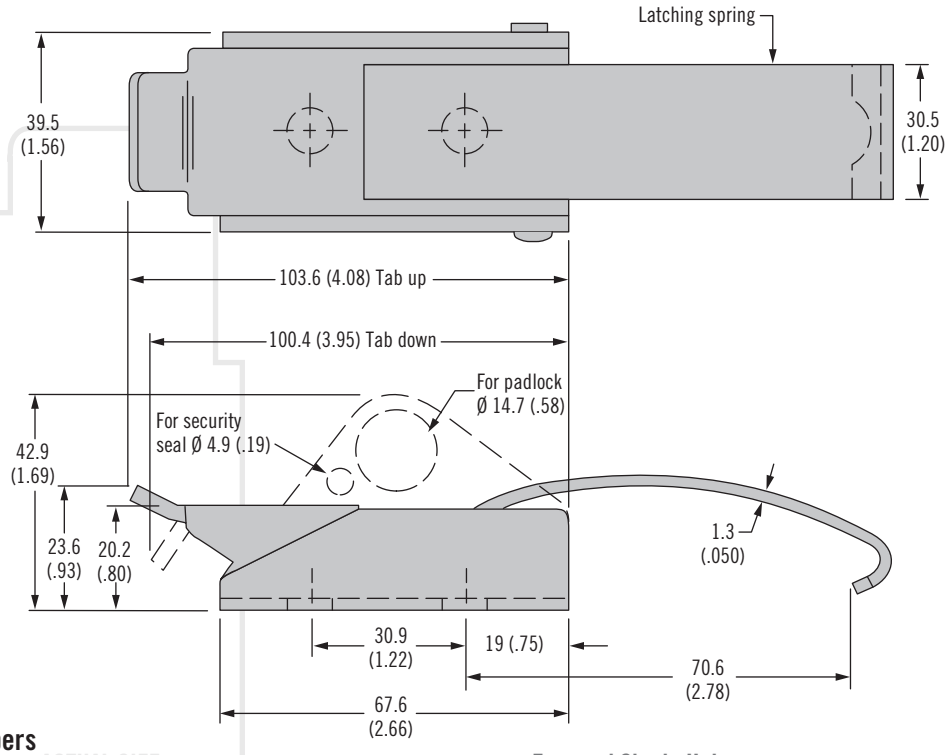

Keepers

ACTUAL SIZE

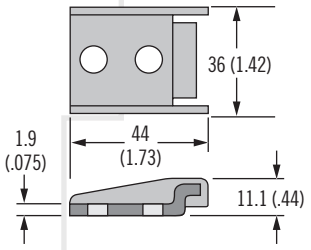

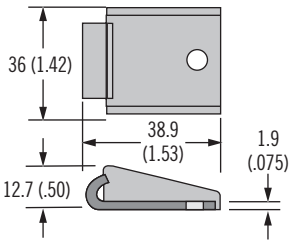

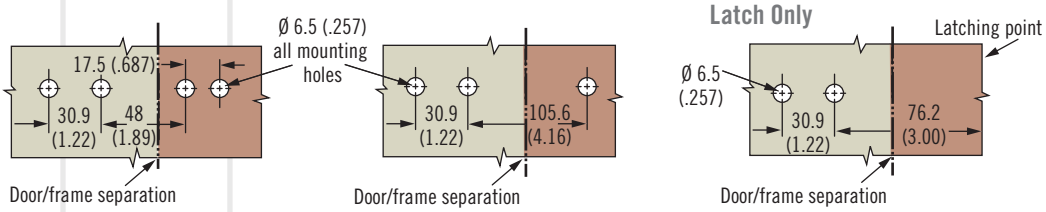

Material	Latch Part Number		
	Lever Tab Up	Lever Tab Down	Padlockable
Steel	97-70-120-11	97-70-220-11	97-70-320-11

Material	Keeper Part Number	
	Concealed 2 Hole	Exposed Single Hole
Steel	97-77-103-11	97-77-104-11

- **Multiple keeper options for application variances**

Material and Finish
Steel, zinc plated

Performance Details
Clamping force: 645 N (145 lbf)

Installation Notes
Install assembly with M6 (1/4) round head screws (not supplied) or 6 (1/4) rivets

Part Number
See table

Order latch and keeper separately

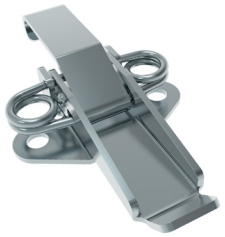

V2 Draw Latch

Over-center

- **Torsion spring to accommodate application variances**

Material and Finish

Stainless steel or steel, zinc plated

Performance Details

Steel
Clamping force:
330 N (75 lbf) Minimum
700 N (160 lbf) Maximum

Stainless Steel
Clamping force:
260 N (60 lbf) Minimum
530 N (120 lbf) Maximum

Notes

Spring loaded anchor plate compensates up to 2.3 (0.09) for irregularities in sealing and gasket set

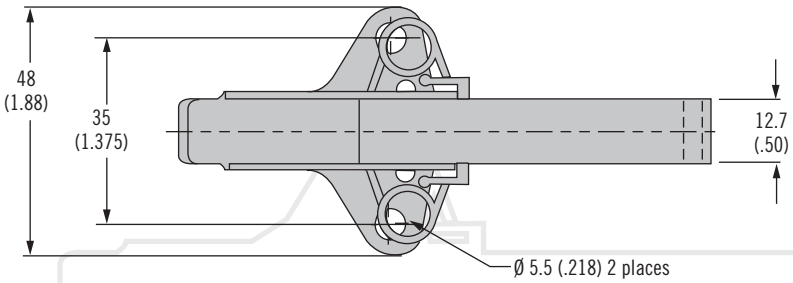

ACTUAL SIZE

Short Blade

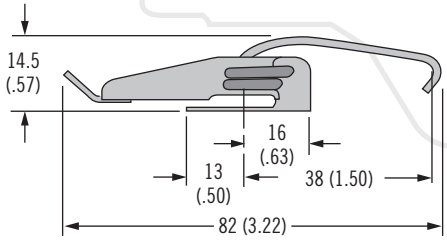

Long Blade

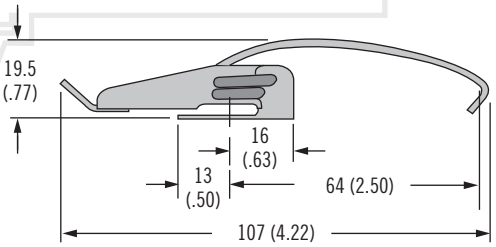

Wire Sealing

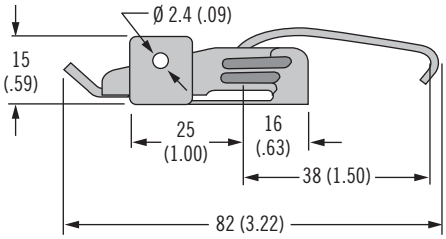

Padlockable

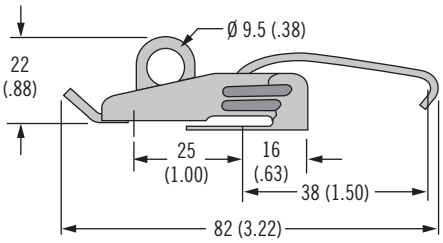

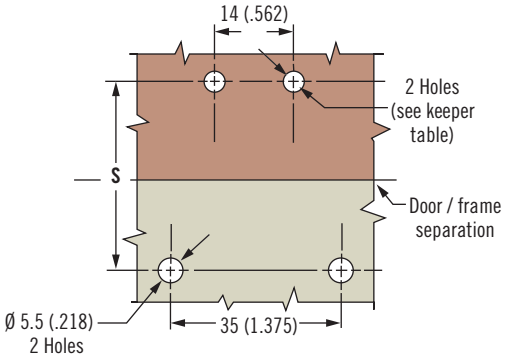

Keeper

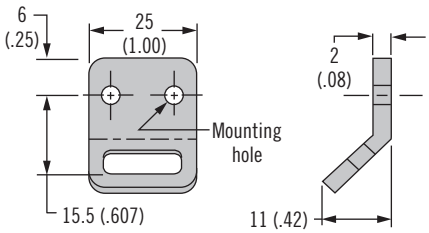

Part Number

See table

Order latch and keeper separately

Description	Style	S Dimension		Part Number	
		Minimum	Maximum	Steel	Stainless Steel
Latch	Short blade	55 (2.17)	57.3 (2.26)	V2-0025-07	V2-0025-52
	Long blade	80.7 (3.17)	83 (3.26)	V2-0068-07	~
	Wire sealing	55 (2.17)	57.3 (2.26)	V2-0034-07	V2-0034-52
	Padlockable	55 (2.17)	57.3 (2.26)	V2-0026-07	V2-0026-52
Keeper	Ø 3.4 (.135) mounting holes			V2-0018-07	V2-0018-52
	Ø 5.5 (.218) mounting holes			V2-0054-07	V2-0054-52

Dimensions in millimeters (inch) unless otherwise stated

V4 Draw Latch
Over-center

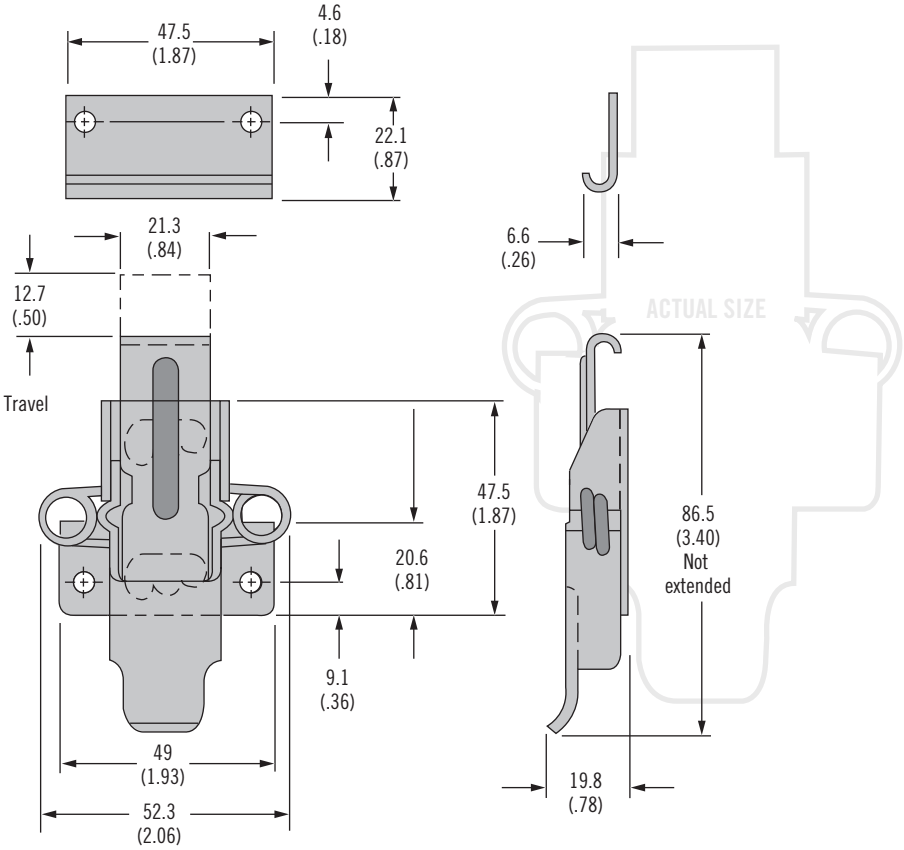

Adjustable Installation

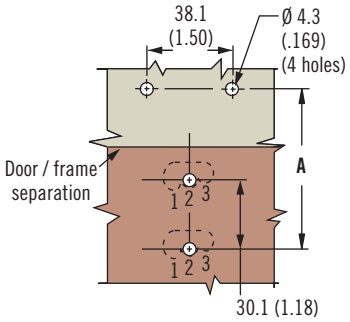

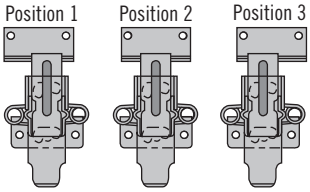

Fixed Installation

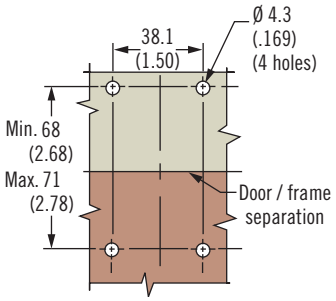

Position Number	Dimensions A	
	Minimum	Maximum
1	71.4 (2.81)	73.7 (2.90)
2	69.9 (2.75)	72.1 (2.84)
3	68 (2.68)	70.6 (2.78)

Description	Part Number	
	Steel	Stainless Steel
Latch	V4-0006-02	V4-0006-52
Keeper	V4-0009-02	V4-0009-52

- **Torsion spring to accommodate application variances**

Material and Finish
Stainless steel or steel, zinc plated

Performance Details
Steel
Average ultimate load:
3500 N (786 lbf)

Stainless Steel
Average ultimate load:
3800 N (850 lbf)

Notes
Spring loaded anchor plate compensates up to 2.3 (.09) for irregularities in sealing and gasket set

Part Number
See table

Order latch and keeper separately

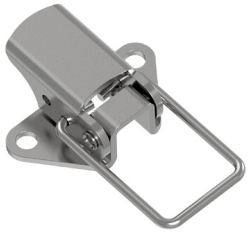

TL Draw Latch

Over-center · Wire bail

- **Compact latch**
- **Multiple link options for application variances**

Material and Finish

Stainless steel or steel, zinc plated

Performance Details

Steel working load:
Compact heavy-duty:
1290 N (290 lbf)
Compact: 220 N (45 lbf)

Stainless steel working load:
Compact heavy-duty:
800 N (180 lbf)
Compact: 220 N (45 lbf)

Installation Notes

Install assembly with M4 (No. 6) round head screws (not supplied) or 4 (.156) rivets

Notes

Order keepers separately, see page 338

Exposed Mounting Holes

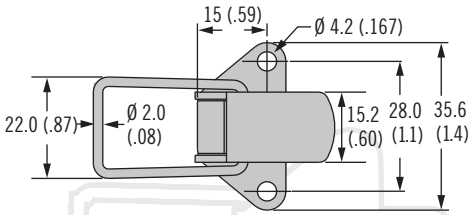

Heavy-Duty

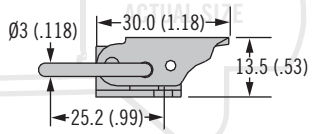

Flat Wire Link

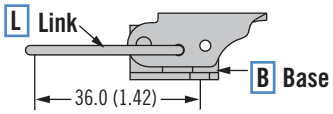

Short Curved Wire Link

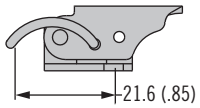

Long Curved Wire Link

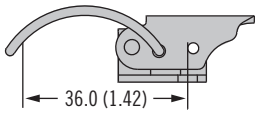

Shallow Hook Link

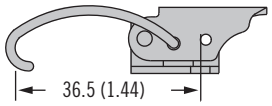

Deep Hook Link

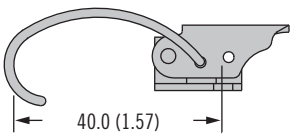

Concealed Mounting Holes

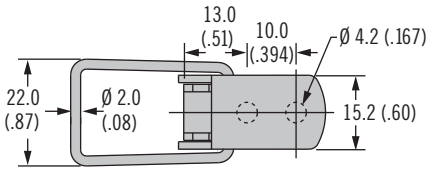

Flat Wire Link

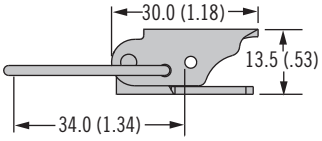

Short Curved Wire Link

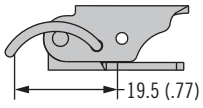

Long Curved Wire Link

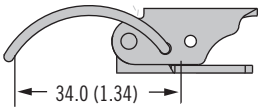

Shallow Hook Link

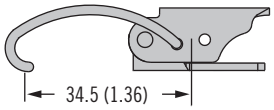

Deep Hook Link

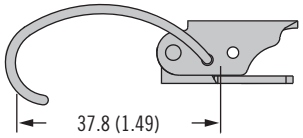

Part Number Selection

Latch only

See page 338 for keepers

L Link style
1 Flat
2 Short curved
3 Long curved
4 Shallow hook
5 Deep hook
6 Heavy-duty

TL - 20 - B 0 L - F

B Base type
1 Exposed
2 Concealed

F Finish
07 Steel, zinc plated
52 Stainless steel, passivated

Dimensions in millimeters (inch) unless otherwise stated

TL Draw Latch

Over-center · Wire bail

Exposed Mounting Holes

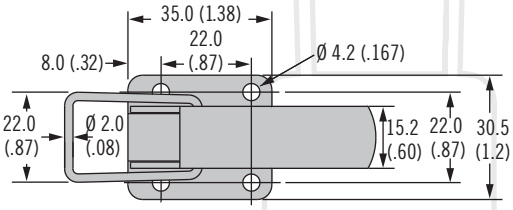

Flat Wire Link

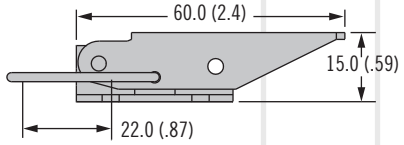

Curved Wire Link

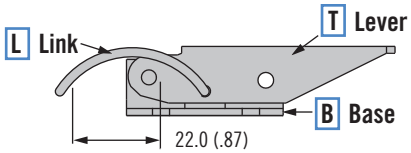

Shallow Hook Link

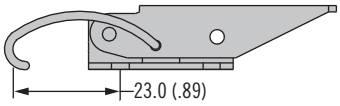

Deep Hook Link

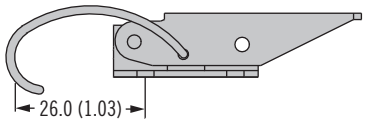

Concealed Mounting Holes

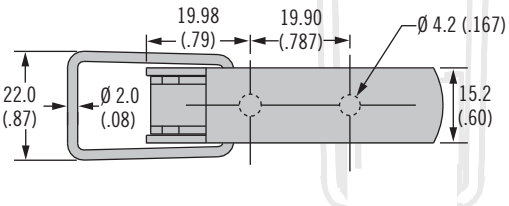

Flat Wire Link

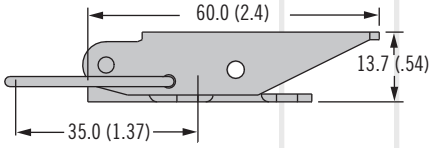

Curved Wire Link

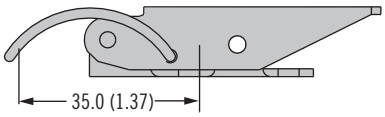

Shallow Hook Link

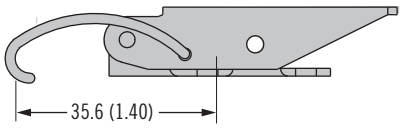

Deep Hook Link

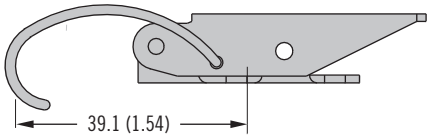

- **Multiple link options for application variances**
- **Secondary locking style available**

Material and Finish

Stainless steel or steel, zinc plated

Performance Details

Steel:
Working load: 220 N (45 lbf)

Stainless Steel:
Working load: 220 N (45 lbf)

Installation Notes

Install assembly with M4 (No. 6) round head screws (not supplied) or 4 (.156) rivets

Notes

Order keepers separately, see page 338

Part Number Selection

Latch only

See page 338 for keepers

L Link style
- 1 Flat
- 3 Short curved
- 4 Shallow hook
- 5 Deep hook

TL - 40 - B T L - F

B Base type
- 1 Exposed
- 2 Concealed

T Lever type
- 0 Standard
- 1 Secondary catch (Exposed base only)
- 2 Padlockable (Steel model only) (Concealed base only)

F Finish
- 07 Steel, zinc plated
- 52 Stainless steel, passivated

TL Keeper

Keeper

- **Multiple keeper options for application variances**
- **Suitable for all TL-20 and TL-40 latches**

Material and Finish

Stainless steel, steel, zinc plated

Installation Notes

Install assembly with M4 (No. 6) round head screws (not supplied) or 4 (.156) rivets

Exposed

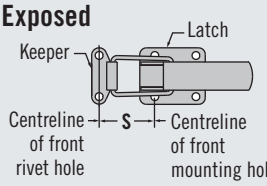

Concealed

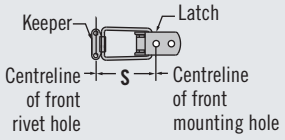

Small

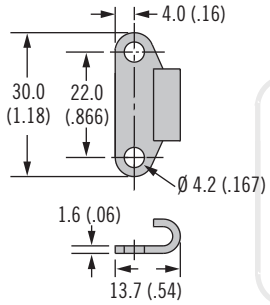

Right Angle

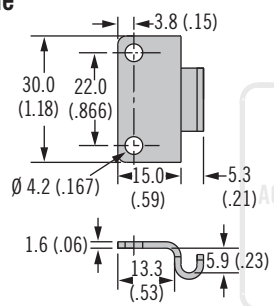

Narrow

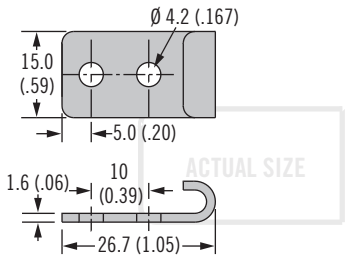

Large

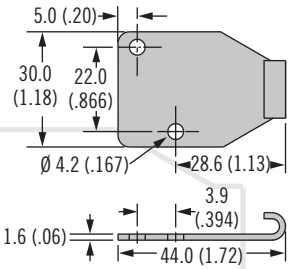

Medium

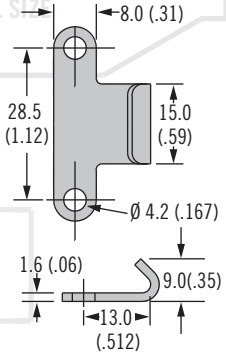

Part Number Selection

1. Select your latch choice in the draw latch column
2. Select your keeper style in the keeper style row
3. Where the column and row meet use the figure for your install **S** dimension

B **Base type**
- **1** Small
- **2** Narrow
- **3** Right angle
- **5** Large
- **9** Medium

TL - 17 - 20 B - F

F **Finish**
- **07** Steel, zinc plated
- **52** Stainless steel passivated

Keeper Style	Small	Narrow	Large	Medium
	TL-17-201-F	TL-17-202-F	TL-17-205-F	TL-17-209-F
Draw Latch	S Dimension			
TL-20-101	44.7 (1.76)	46.7 (1.84)	62.0 (2.44)	49.0 (1.93)
TL-20-102	30.3 (1.19)	32.3 (1.27)	47.6 (1.87)	34.6 (1.36)
TL-20-103	44.7 (1.76)	46.7 (1.84)	62.0 (2.44)	49.0 (1.93)
TL-20-106	33.9 (1.33)	35.9 (1.41)	51.2 (2.02)	38.2 (1.50)
TL-20-201	41.7 (1.64)	43.7 (1.72)	59.0 (2.32)	46.0 (1.81)
TL-20-202	28.2 (1.11)	30.2 (1.19)	45.5 (1.79)	32.5 (1.28)
TL-20-203	41.7 (1.64)	43.7 (1.72)	59.0 (2.32)	46.0 (1.81)
TL-40-101	30.7 (1.21)	32.7 (1.29)	48.0 (1.89)	35.0 (1.38)
TL-40-103	30.7 (1.21)	32.7 (1.29)	48.0 (1.89)	35.0 (1.38)
TL-40-201	43.7 (1.72)	45.7 (1.80)	61.0 (2.40)	48.0 (1.89)
TL-40-203	43.7 (1.72)	45.7 (1.80)	61.0 (2.40)	48.0 (1.89)

Dimensions in millimeters (inch) unless otherwise stated

TL Draw Latch

Over-center · Wire bail

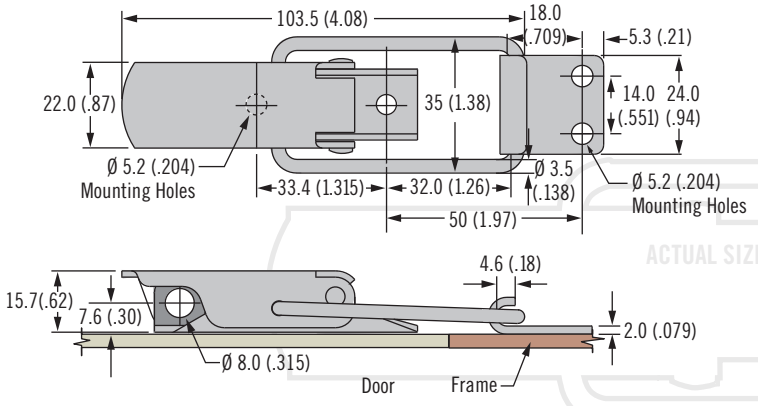

Description	Part Number	
	Steel	Stainless Steel
Latch	TL-50-201-07	TL-50-201-52
Keeper	TL-17-501-07	TL-17-501-52

- **Robust construction**
- **Padlockable**

Material and Finish

Stainless steel or steel, zinc plated

Performance Details

Working load: 2490 N (560 lbf)

Installation Notes

Install assembly with M5 (No. 10) round head screws (not supplied) or 5 (.196) rivets.

Part Number

See table

Order latch and keeper separately

TL Draw Latch

Over-center · Wire bail

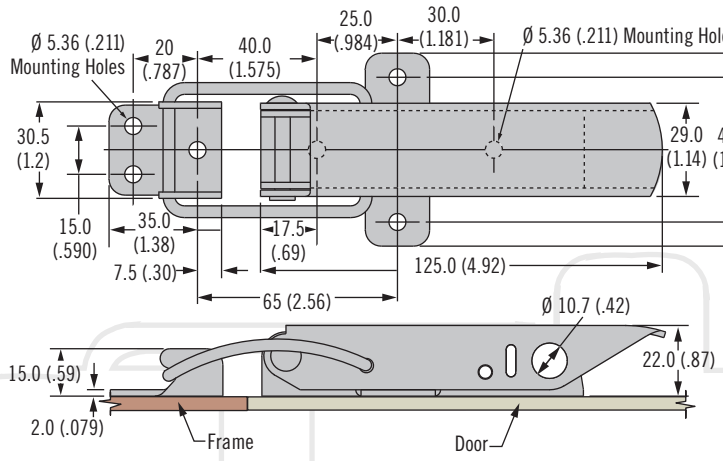

Description	Part Number
Draw Latch	TL-60-102-07
Keeper	TL-17-601-07

- **Robust construction**
- **Padlockable**

Material and Finish

Steel, zinc plated

Performance Details

Working load: 2670 N (600 lbf)

Installation Notes

Install assembly with M5 (No. 10) round head screws (not supplied) or 5 (.196) rivets

Part Number

See table

Order latch and keeper separately

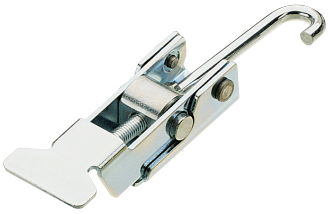

A1 Draw Latch

Over-center · Adjustable

- **Hooked latching rod**
- **Latching arm adjusts to fit your grip range**

Material and Finish

Stainless steel or steel, zinc plated
Grip: Vinyl yellow

Performance Details

Latched at end of hook:
Small:
Maximum static load:
1200 N (270 lbf)
Medium:
Maximum static load:
1780 N (400 lbf)

Latched at center of radius:
Small:
Maximum static load:
1350 N (300 lbf)
Medium:
Maximum static load:
3110 N (700 lbf)

Installation Notes

Small:
Install assembly with four M5 (No. 10) screws or rivets

Medium:
Install assembly with four M6 (1/4) screws or rivets

Small

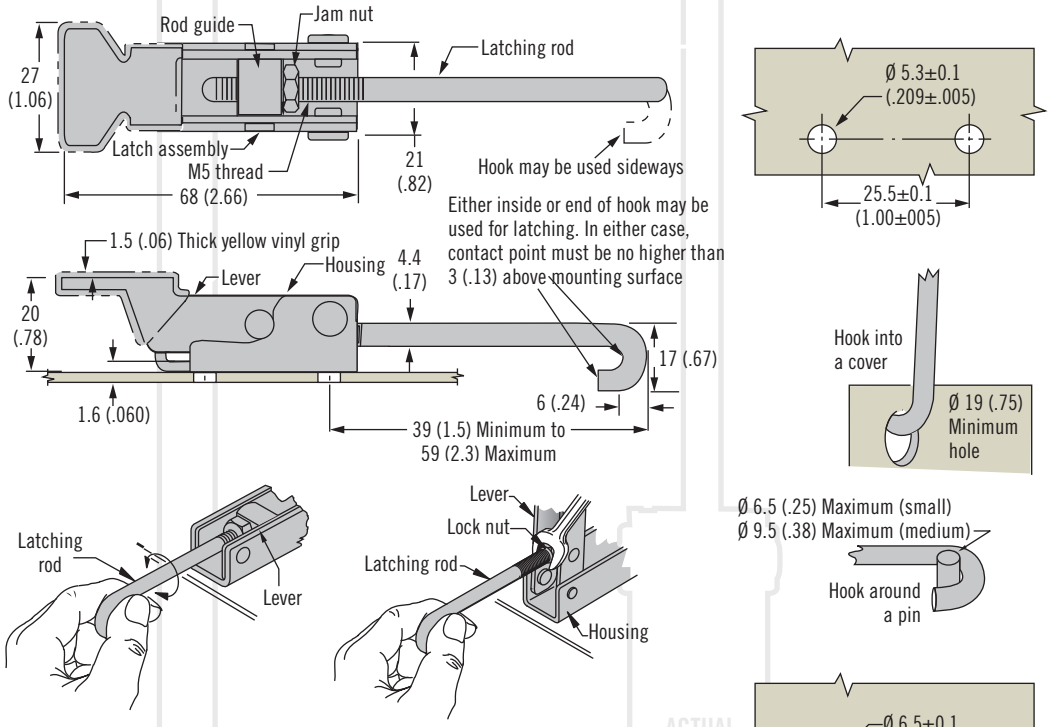

ACTUAL SIZE (SMALL)

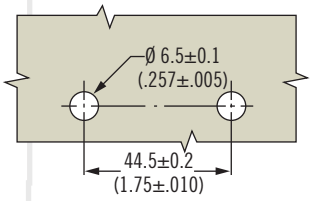

Medium

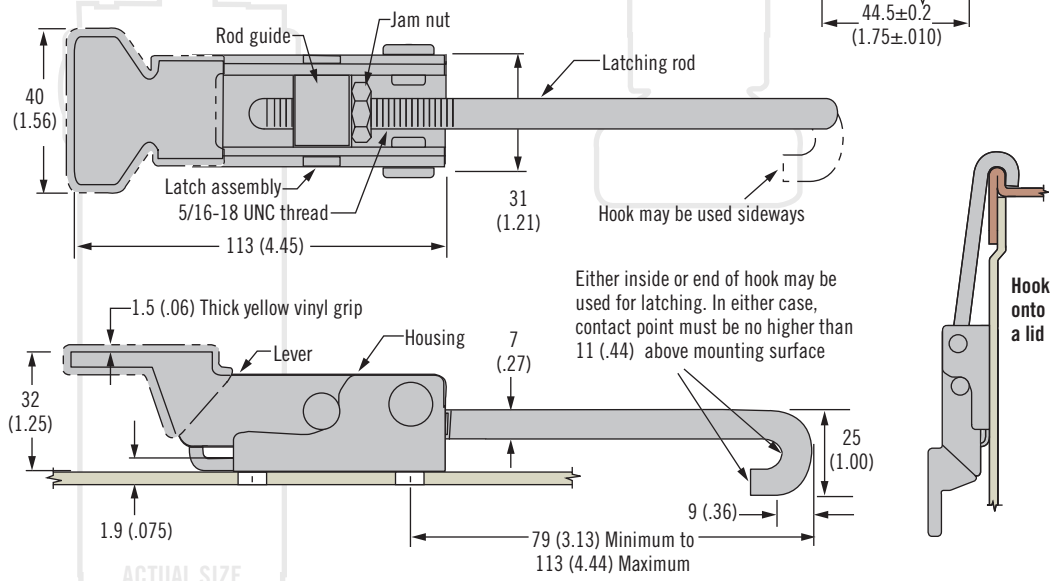

ACTUAL SIZE (MEDIUM)

Part Number Selection

B Base size
- **5** Small
- **7** Medium

A1 - 11 - B 02- M

M Finish
- **10** Steel, zinc plated without yellow grip
- **20** Steel, zinc plated with yellow grip
- **40** Stainless steel without yellow grip
- **50** Stainless steel with yellow grip

Dimensions in millimeters (inch) unless otherwise stated

southco®

A1 Draw Latch

Over-center · Adjustable

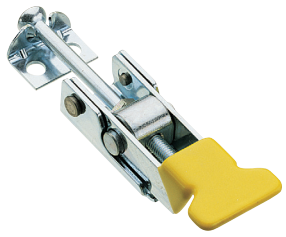

Small

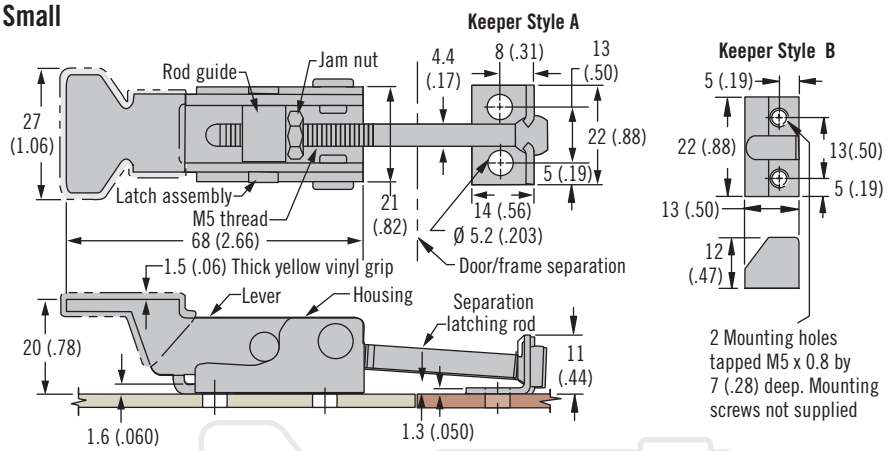

Small Panel Preparation

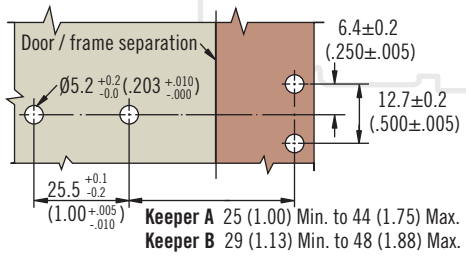

Medium Panel Preparation

ACTUAL SIZE

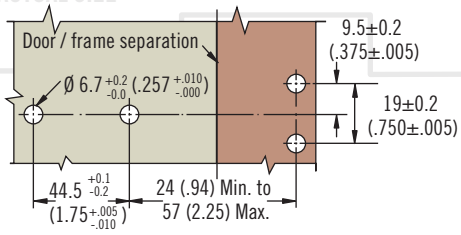

Medium

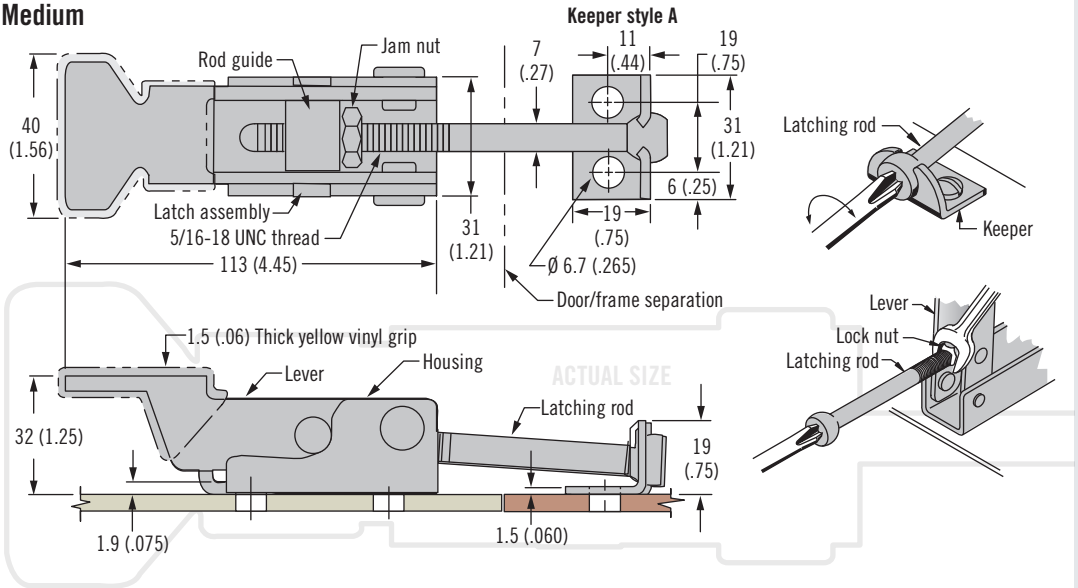

ACTUAL SIZE

- **Adjustable grip**

Material and Finish

Stainless steel or steel, zinc plated
Grip: Vinyl yellow

Performance Details

Small (keeper style A):
Maximum static load: 180 N (40 lbf)

Small (keeper style B):
Maximum static load:
1550 N (350 lbf)

Medium (keeper style A)
Maximum static load: 890 N (200 lbf)

Installation Notes

Small:
Install assembly with four M5 (No. 10) round head screws or rivets

Medium:
Install assembly with four M6 (1/4) round head screws or rivets

Part Number Selection

Assembly complete with keeper

A1 - 10 - B 0 K - M

B Base size
- **5** Small
- **7** Medium

K Keeper style
- **1** Type A
- **3** Type B (Small steel, zinc plated models only)

M Finish
- **10** Steel, zinc plated without yellow grip
- **20** Steel, zinc plated with yellow grip
- **40** Stainless steel without yellow grip
- **50** Stainless steel with yellow grip

A1 Draw Latch

Over-center · Adjustable

- **Robust construction**
- **Adjustable grip**

Material and Finish

Steel, zinc plated or black powder coated

Performance Details

Latched at end of hook:
Maximum static load:
2225 N (500 lbf)

Latched at center of radius:
Maximum static load:
4450 N (1000 lbf)

Installation Notes

Install assembly with two M8 (5/16) bolts (not supplied)

Hook may be used sideways. Either inside or end of hook may be used for latching. In either case, contact point must be no higher than 25 (1.00) above mounting surface

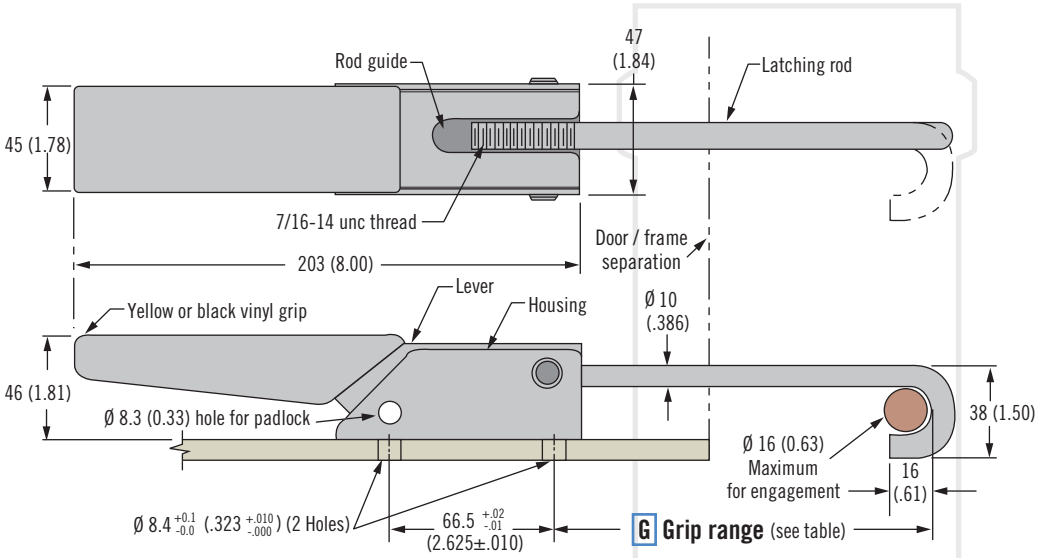

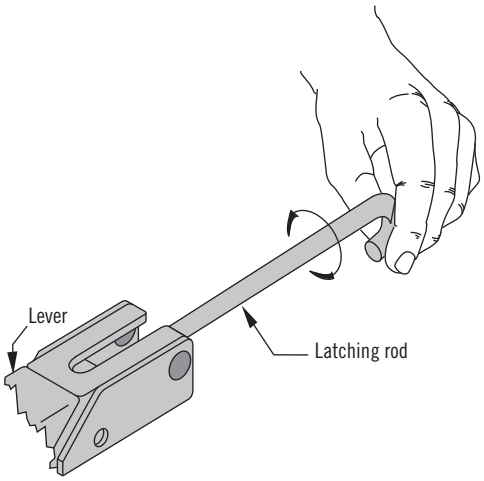

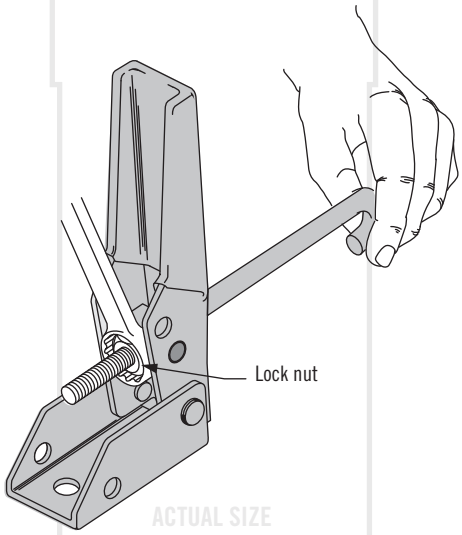

Part Number

See table

G Grip Range		Part Number	
Minimum	Maximum	Bright latch with yellow vinyl grip	Black latch with black vinyl grip
89 (3.50)	114 (4.50)	A1-11-902-20	A1-11-902-31

Dimensions in millimeters (inch) unless otherwise stated

07 Draw Latch

Over-center · Living hinge

Standard Style

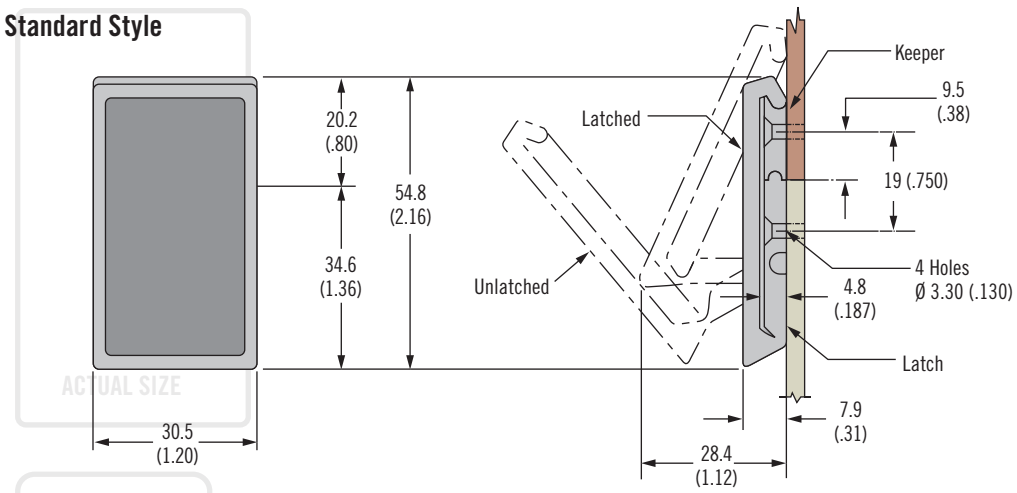

Secondary Catch Style

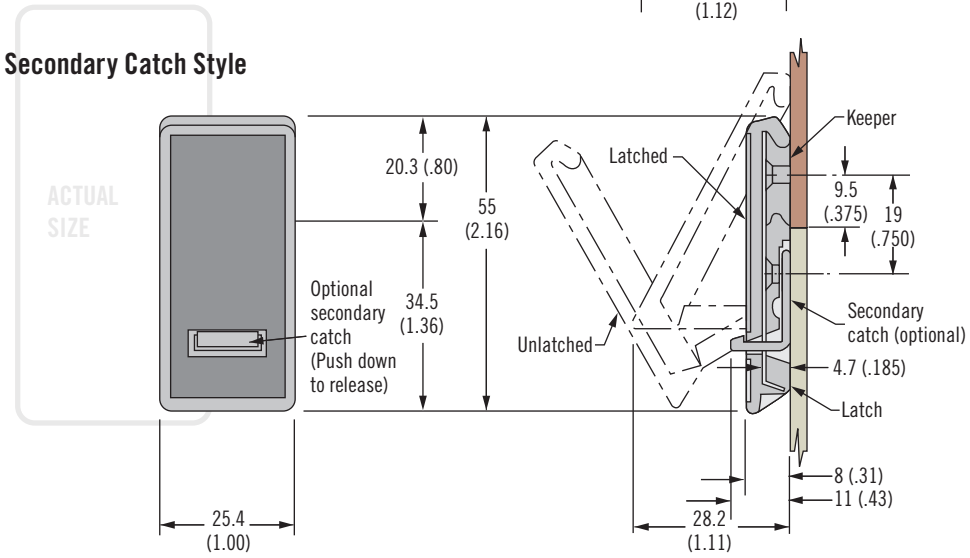

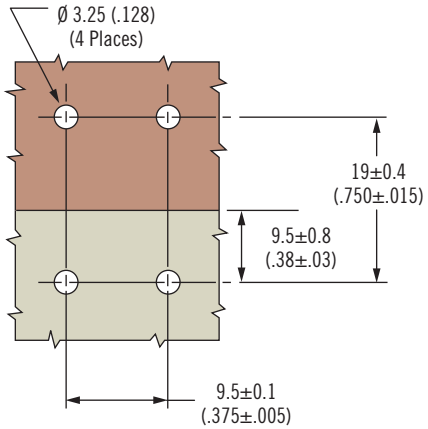

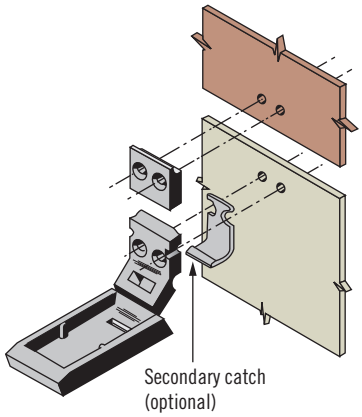

- **Low profile one piece molded latch**
- **Concealed mounting**
- **Secondary catch option to prevent accidental opening**

Material and Finish

Polypropylene black or white
Secondary catch: acetal black or red

Performance Details

Maximum working load:
Standard: 445 N (100 lbf)

Secondary catch: 310 N (70 lbf)

Operating temperature range:
0°C (32°F) to 65°C (150°F)

Flammability rating: UL94-HB

Installation Notes

Install assembly with four Ø 3 (.125) flat head rivets or M3 (No. 4) flat head screws (not supplied)

Part Number Selection

Assembly complete with keeper

B **Base type**
2 Standard
5 Secondary catch

07 - 10 - B 01- F

F **Finish**
11 White (standard only)
12 Black (standard only)
70 Black with red secondary catch
72 Black with black secondary catch

Dimensions in millimeters (inch) unless otherwise stated

91 Draw Latch

Under-center · Adjustable

- **Adjustable grip**
- **Kick out feature disengages from keeper**
- **Secondary catch option to prevent accidental opening**

Material and Finish

Stainless steel or steel, zinc plated

Performance Details

Maximum working load:
With 91-600 keeper:
1325 N (300 lbf)

With K4-2338 keeper:
1550 N (350 lbf)

Installation Notes

M4 (No. 8) screws (not supplied)

Latch

Exposed Base (Secondary catch option shown)

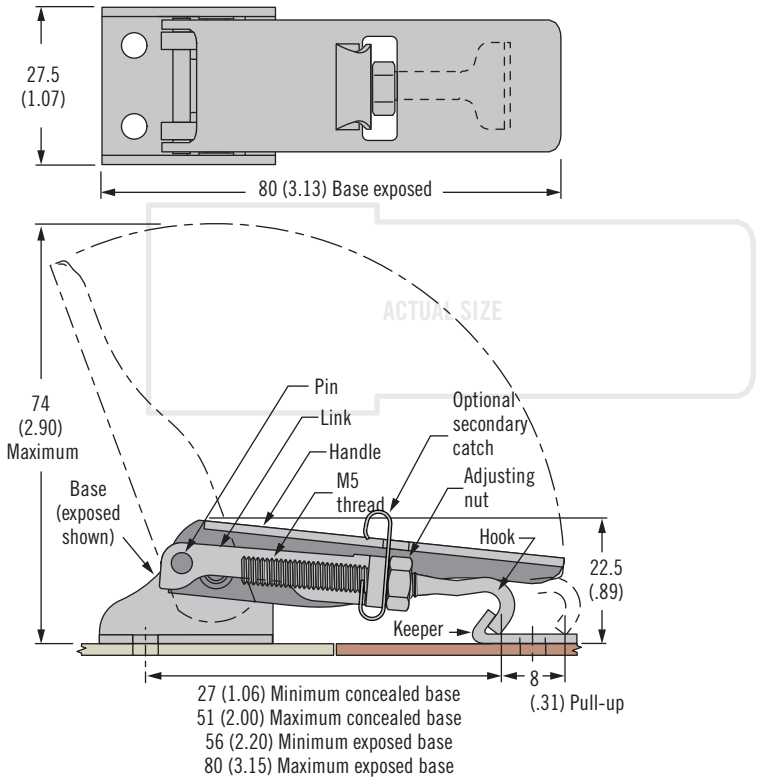

Concealed Base (Hasp option shown)

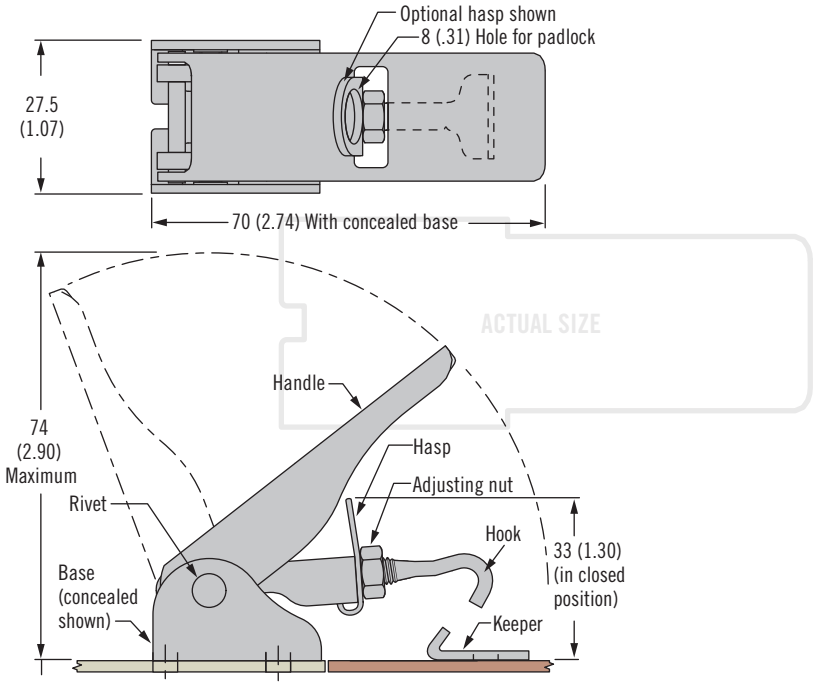

Dimensions in millimeters (inch) unless otherwise stated

Keepers

Concealed

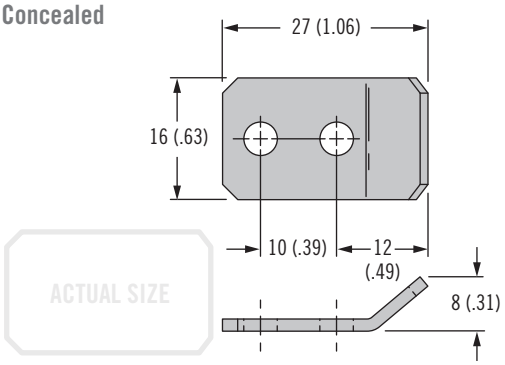

Exposed

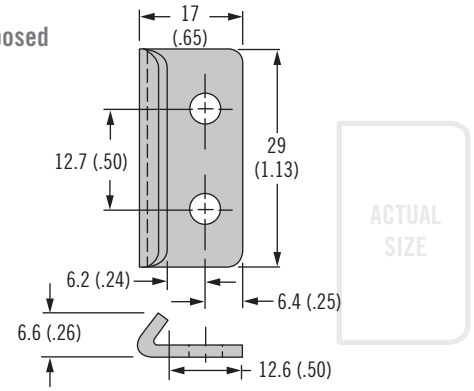

Exposed Base and Concealed Keeper

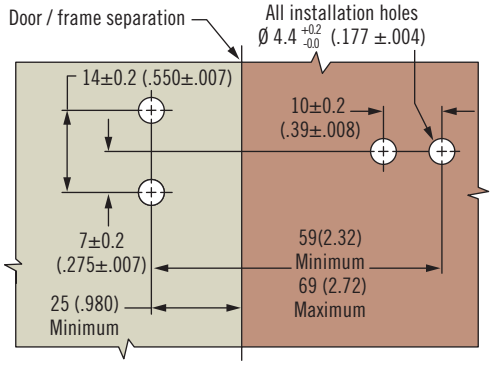

Exposed Base and Exposed Keeper

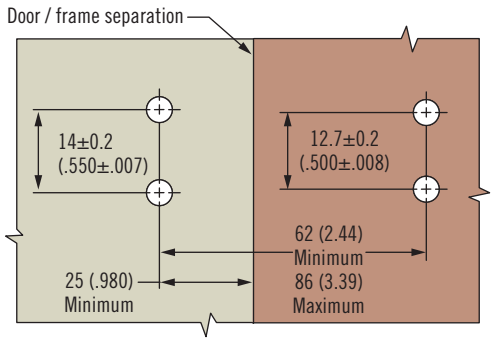

Concealed Base and Concealed Keeper

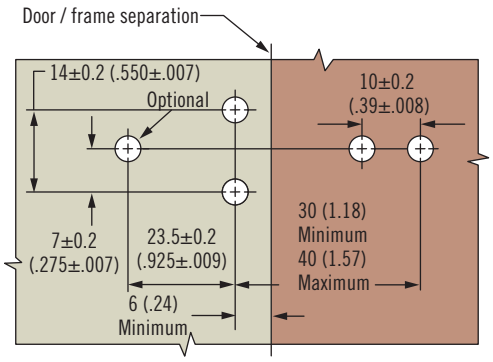

Concealed Base and Exposed Keeper

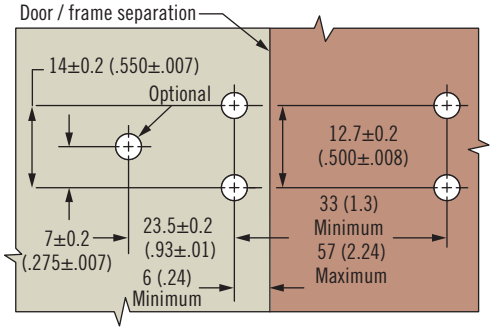

B **Base type**

- **1** Concealed
- **2** Concealed with secondary catch
- **3** Concealed with padlock hasp
- **5** Exposed
- **6** Exposed with secondary catch
- **7** Exposed with padlock hasp

91 - 5 B 2- F

F **Finish**

- **07** Steel, zinc plated
- **52** Stainless steel

Finish	Keeper Part Number	
	Concealed	Exposed
Steel	91-600-07	K4-2338-07
Stainless Steel	91-600-52	K4-2338-52
Stainless Steel, Black	91-600-63	K4-2338-63

Dimensions in millimeters (inch) unless otherwise stated

Part Number Selection

Order latch and keeper separately

For latch part number see builder

For keeper part number see table

91 Draw Latch

Under-center · Adjustable

- **Adjustable grip**
- **Secondary catch option to prevent accidental opening**

Material and Finish

Stainless steel or steel, zinc plated

Performance Details

Maximum working load

Stainless steel: 710 N (160 lbf)

Steel, zinc plated: 1200 N (270 lbf)

Installation Notes

Ø 2.5 (No. 3) screws (not supplied)

Latch

Standard

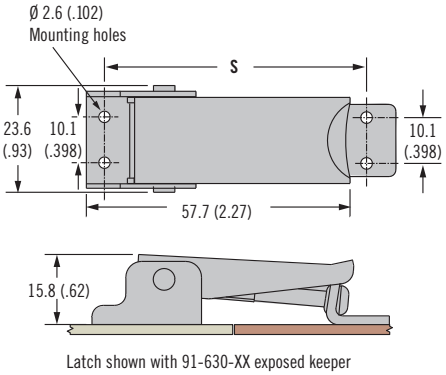

Latch shown with 91-630-XX exposed keeper

Secondary Catch

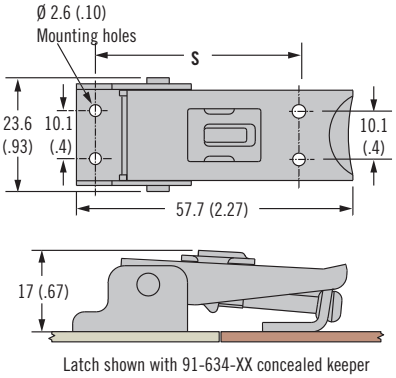

Latch shown with 91-634-XX concealed keeper

Keeper

Exposed

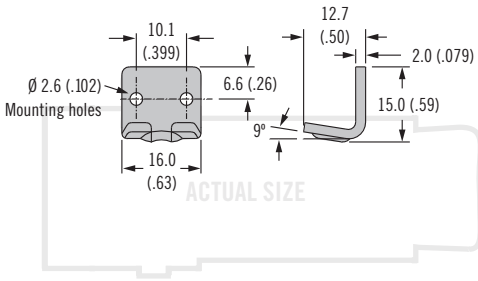

Concealed

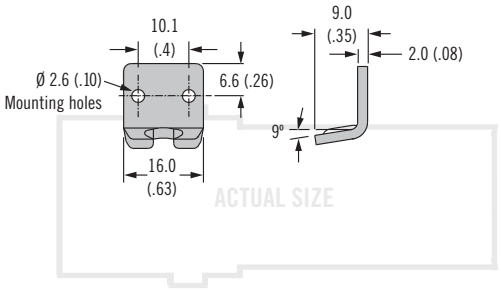

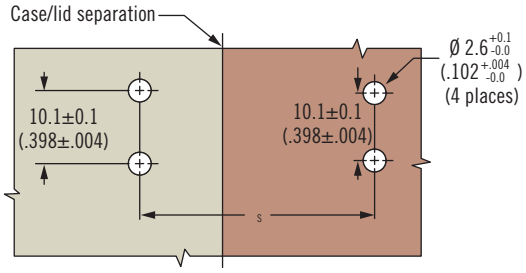

Part Number

See table

Order latch and keeper separately

Material	Latch Part Number	
	Standard	Secondary Catch
Steel	91-351-07	91-361-07
Stainless Steel	91-351-52	91-361-52

S	Keeper Type		
		Steel	Stainless Steel
39 - 47 (1.53 - 1.85)	Concealed	91-634-07	91-634-52
52 - 60 (2.04 - 2.36)	Exposed	91-630-07	91-630-52

Dimensions in millimeters (inch) unless otherwise stated

91 Draw Latch

Under-center · Adjustable

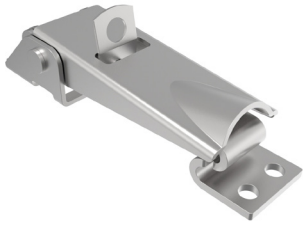

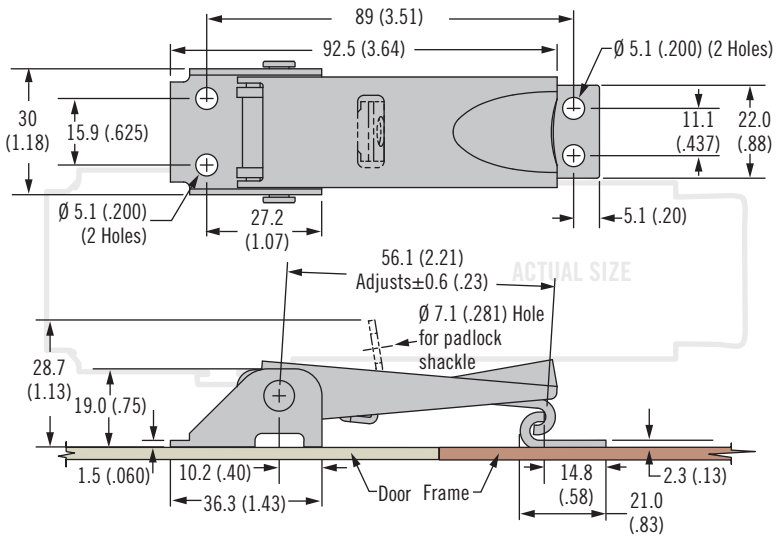

Type	Part Number	
	Steel	Stainless Steel
Standard Latch	91-752-07	91-752-52
Latch with Padlock Hasp	91-772-07	91-772-52

- **Adjustable grip**

Material and Finish

Stainless steel or steel, zinc plated

Performance Details

Maximum working load: 2670 N (600 lbf)

Installation Notes

M5 (No. 10) screws (not supplied)

Part Number

See table

Assembly complete with keeper

91 Draw Latch

Under-center · Adjustable

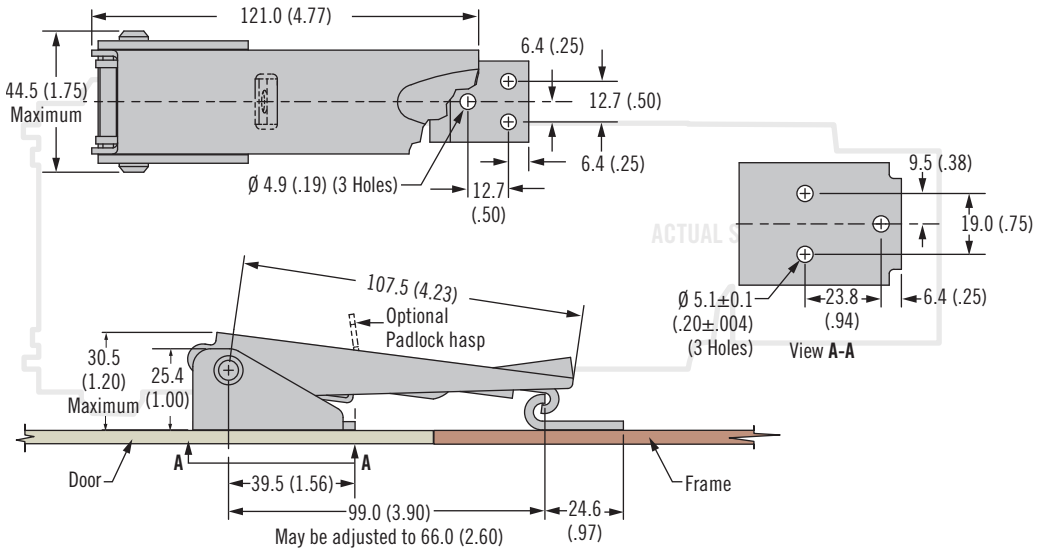

Type	Part Number
Standard Latch	91-812-52
Latch with Padlock Hasp	91-832-52

- **Adjustable grip**

Material and Finish

Stainless steel

Performance Details

Maximum working load: 3560 N (800 lbf)

Installation Notes

Install assembly with M4 (No. 10) screws (not supplied)

Part Number

See table

Assembly complete with keeper

K2 Draw Latch

Rotary · Stylized wing

- **Lift and Turn operation**
- **Consistent pull-up**

Material and Finish

Stainless steel or steel, black powder coated

Performance Details

Steel:
Maximum working load:
1230 N (275 lbf)

Stainless steel:
Maximum working load:
845 N (190 lbf)

Operating temperature range:
-40°C (-40°F) to 80°C (175°F)

Installation Notes

Install assembly with Ø 4 (.157) rivets or M4 (No. 8) screws (not supplied)

Notes

Spring loaded:
Ideal for applications where shock and vibration occur. Compensates up to 1.7 (.07) for mounting hole irregularities, panel variations and gasket set. Also provides an additional allowance of 2.3 (.09) deflection when loaded.

Part Number

See table

Order latch and keeper separately

Spring Loaded

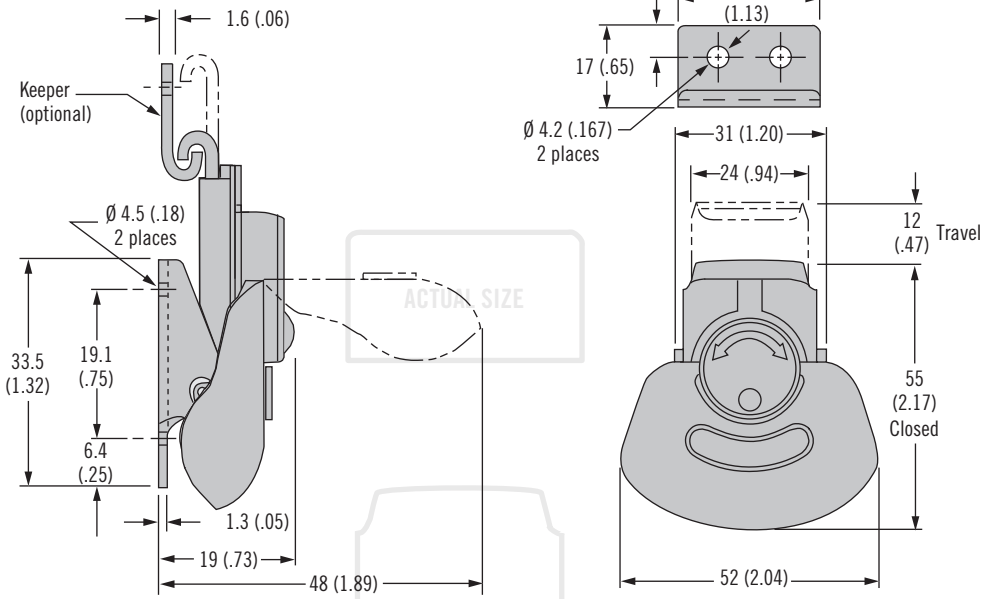

Fixed

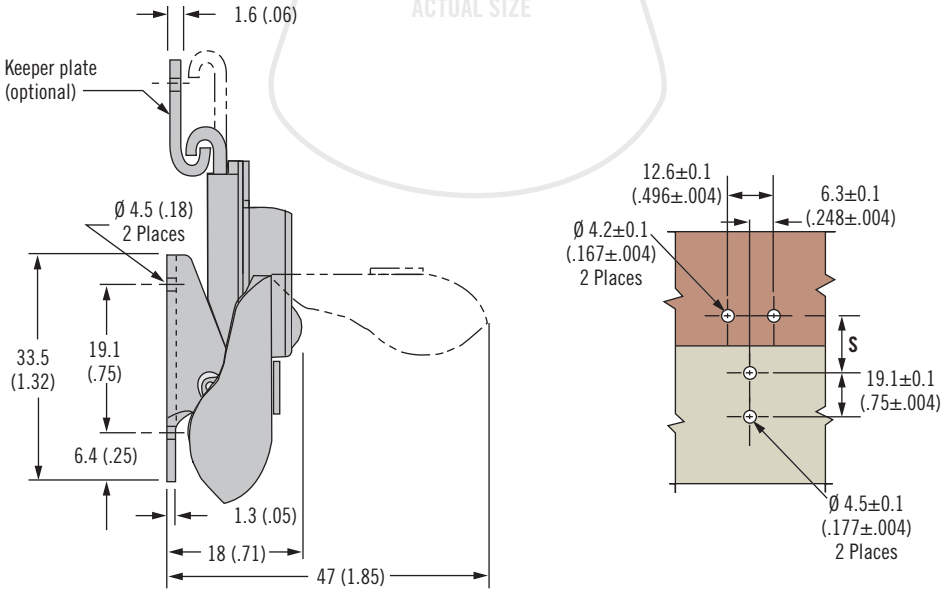

Latch	Part Number			S
	Style	Steel, Black Powder Coated	Stainless Steel	
	Spring loaded	K2-3005-89	K2-3005-51	$32^{+1.7}_{-0.2}$ ($1.25^{+.07}_{-.01}$)
	Fixed	K2-3001-89	K2-3001-51	32±0.2 (1.25±.01)
Keeper		K4-2338-89	K4-2338-51	

Dimensions in millimeters (inch) unless otherwise stated

Hinge Lock

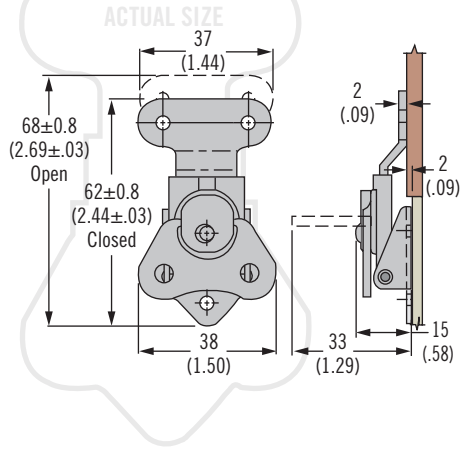

Low Profile

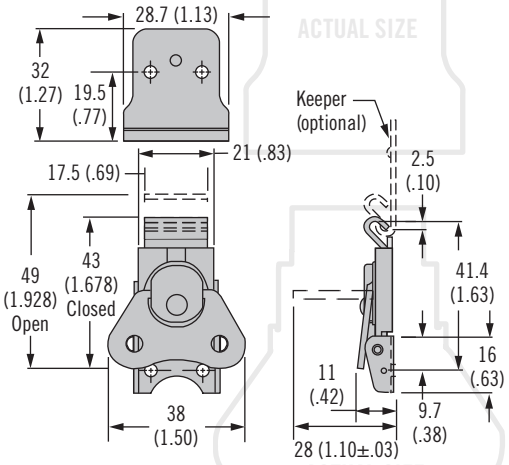

Long Slide

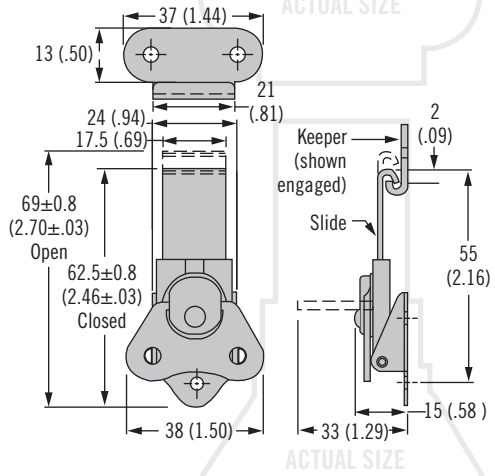

Short Anchor Plate

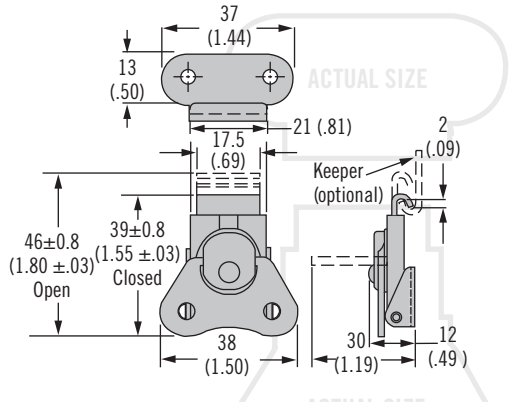

Hinge Lock

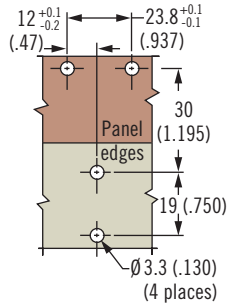

Long Slide

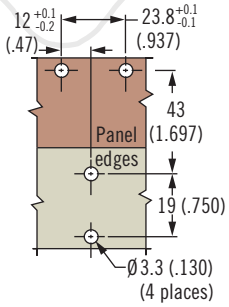

Low Profile

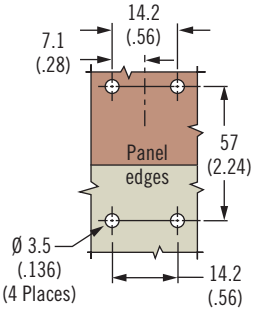

Short Base

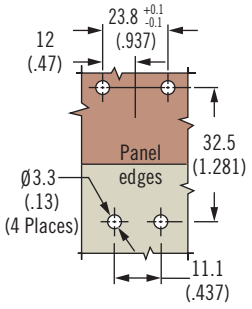

Material	Latch Part Number				Keeper Part Number	
	Hinge Lock	Long Slide	Low Profile	Short Base	Keeper	Low Profile Keeper
Steel	K3-1746-07	K3-2347-07	K3-2694-07	K3-1660-07	K3-0334-07	K3-2696-07
Stainless Steel	~	K3-2347-52	~	K3-1660-52	K3-0334-52	~

- **Adjustable grip**

Material and Finish
Stainless steel or steel, zinc plated

Installation Notes
Install assembly with Ø 3 (.125) rivets or M3 (No. 4) screws (not supplied)

Notes
Hinge lock style has an integrally attached keeper

Part Number
See table

Order latch and keeper separately

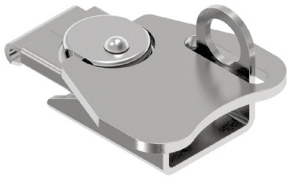

K3 Draw Latch

Rotary

- **Lift and Turn operation**
- **Consistent pull-up**

Material and Finish

Stainless steel or steel, zinc plated

Installation Notes

Install assembly with Ø 3 (.125) rivets or M3 (No. 4) screws (not supplied)

Notes

Spring loaded:
Ideal for applications where shock and vibration occur. Compensates up to 4 (.156) for mounting hole irregularities, panel variations and gasket set.

Part Number

See table

Order latch and keeper separately

Riveted

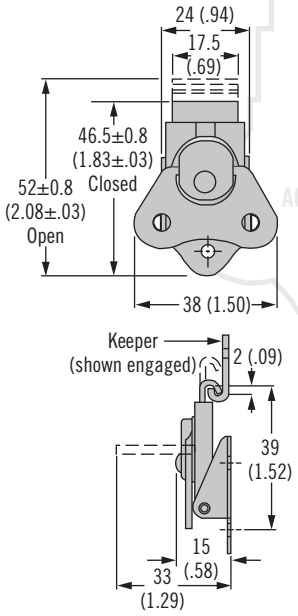

Keeper

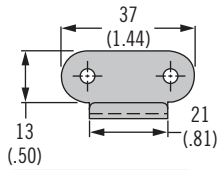

Spring Loaded

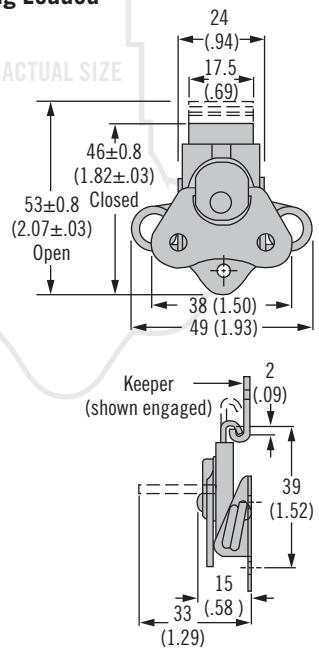

Padlockable

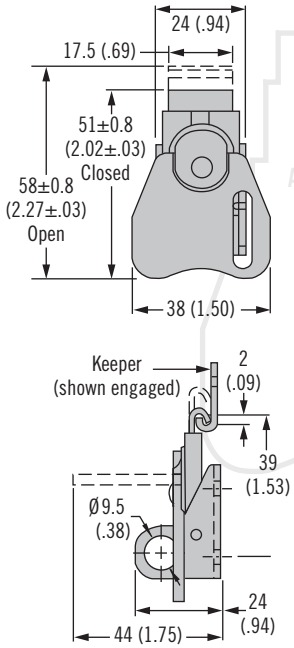

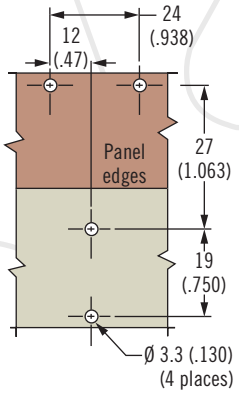

Kick-Out Spring

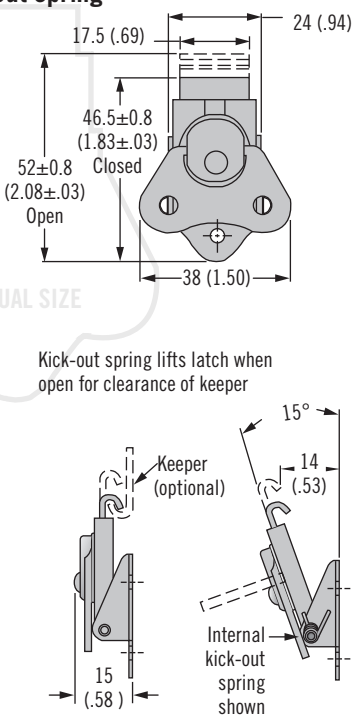

Material	Part Number				
	Riveted	Spring Loaded	Padlockable	Kick-Out Spring	Keeper
Steel	K3-1625-07	K3-1735-07	K3-2403-07	K3-1887-07	K3-0334-07
Stainless Steel	K3-1625-52	K3-1735-52	K3-2403-52	K3-1887-52	K3-0334-52

Dimensions in millimeters (inch) unless otherwise stated

K4 Draw Latch
Rotary

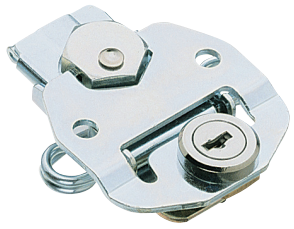

Riveted

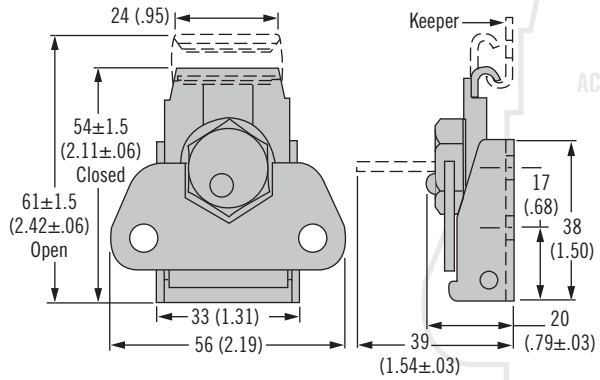

Keeper

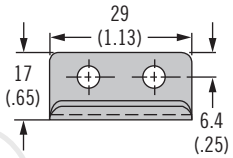

Spring Loaded

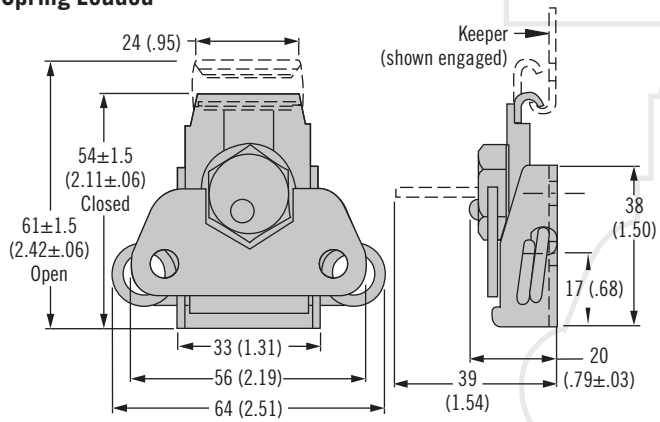

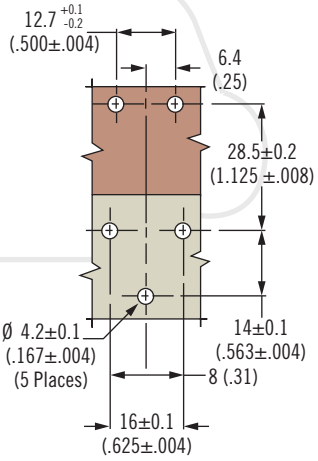

Key Lockable

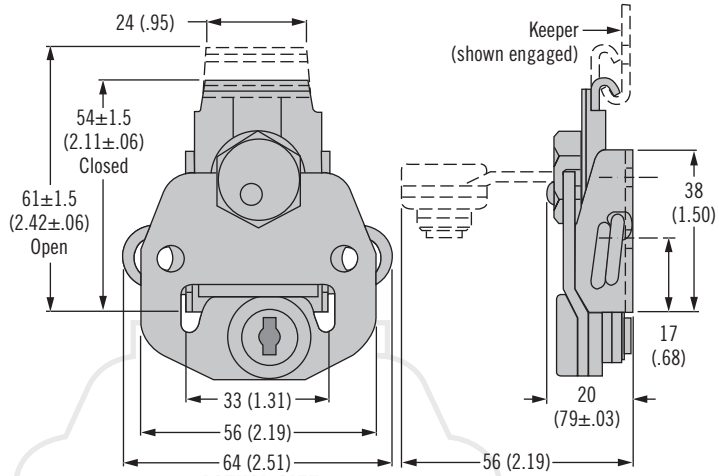

Type	Part Number	
	Latch	Keeper
Riveted	K4-2714-07	K4-2338-07
Spring loaded	K4-2359-07	
Key lockable	K4-2833-07	

- **Lift and Turn operation**
- **Consistent pull-up**

Material and Finish
Steel, zinc plated

Installation Notes
Install assembly with Ø 4 (.157) rivets or M4 (No. 8) screws (not supplied)

Notes
Spring loaded:
Ideal for applications where shock and vibration occur. Compensates up to 4 (.156) for mounting hole irregularities, panel variations and gasket set.

Part Number
See table

Order latch and keeper separately

K5 Draw Latch

Rotary

- **Lift and Turn operation**
- **Consistent pull-up**

Material and Finish

Stainless steel or steel, zinc plated

Installation Notes

Install assembly with Ø 5 (3/16) rivets or M5 (No. 10) screws (not supplied)

Notes

Spring loaded and low profile: Ideal for applications where shock and vibration occur. Compensates up to 4 (.16) for mounting hole irregularities, panel variations and gasket set.

Part Number

See table

Order latch and keeper separately

Riveted (hex cam shown)

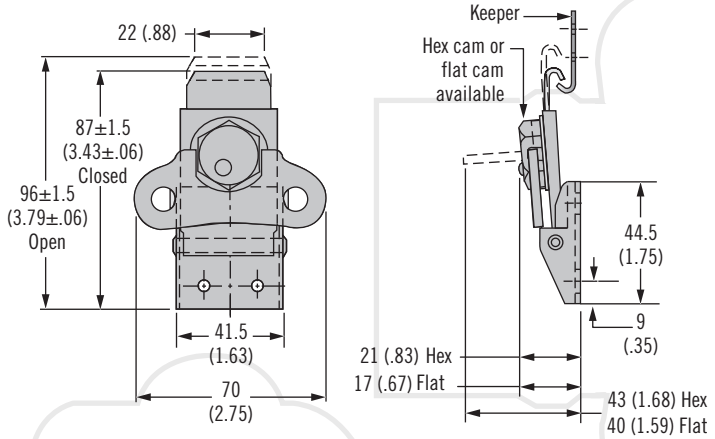

Low Profile (flat cam shown)

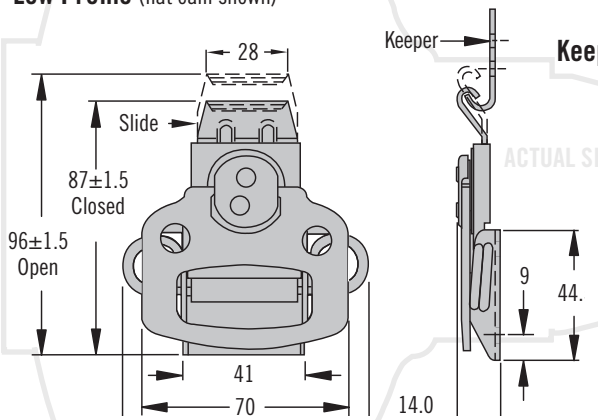

Keeper

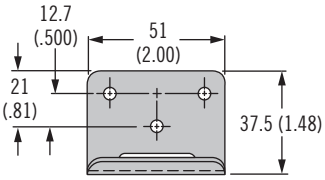

Spring Loaded (flat cam shown)

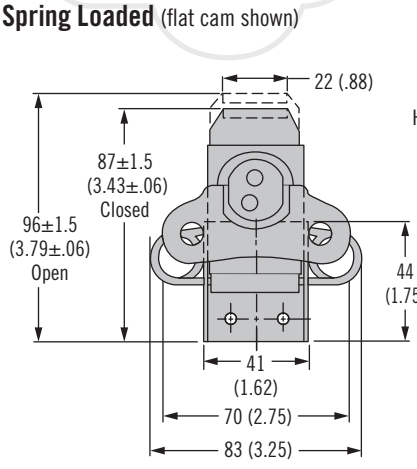

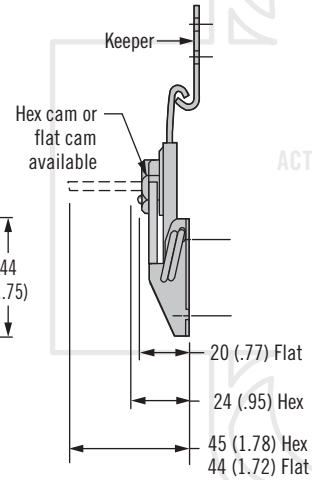

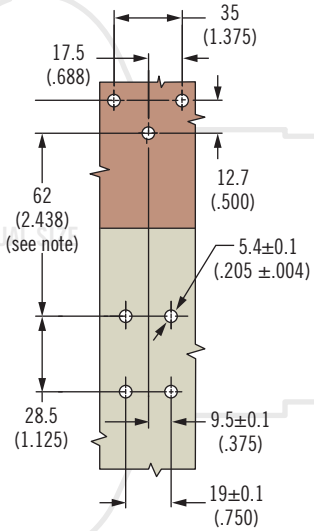

Material	Part Number					
	Riveted Hex Cam	Riveted Flat Cam	Low Profile Flat Cam	Spring Loaded Hex Cam	Spring Loaded Flat Cam	Keeper
Steel	K5-2812-07	K5-2857-07	K5-2814-07	K5-2858-07	K5-2856-07	K5-2811-07
Stainless Steel	~	K5-2857-52	~	~	K5-2856-52	K5-2811-52

Dimensions in millimeters (inch) unless otherwise stated

- **Lift and Turn operation**
- **Consistent pull-up**

Material and Finish
Steel, zinc plated

Installation Notes
Install assembly with Ø 5 (3/16) rivets or M5 (No. 10) flat head screws (not supplied)

Notes
Spring loaded:
Ideal for applications where shock and vibration occur. Compensates up to 4 (.16) for mounting hole irregularities, panel variations and gasket set.

Part Number
See table

Order latch and keeper separately

Padlockable (riveted hex cam shown)

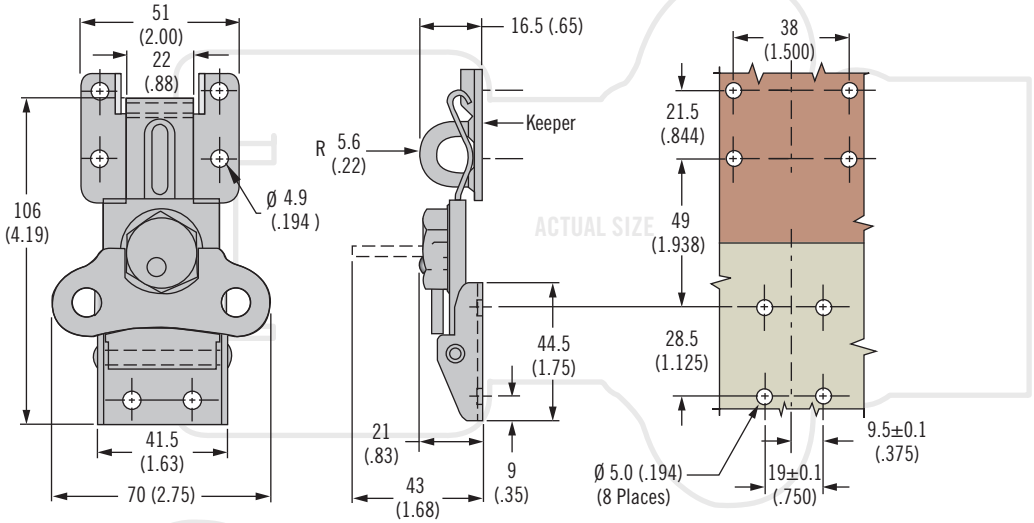

Key Lockable

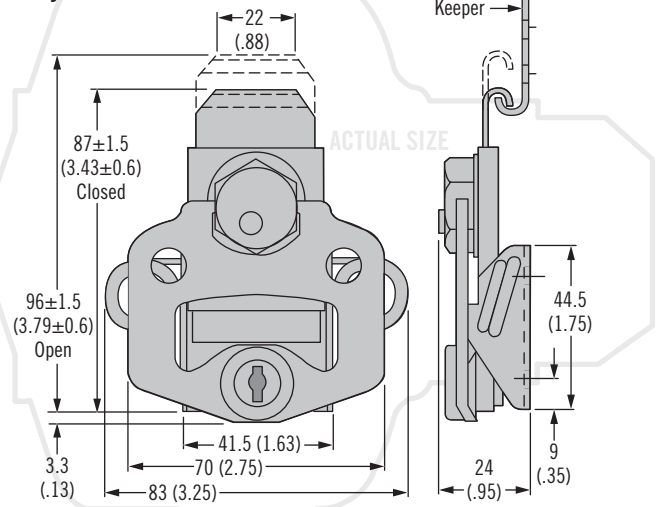

Keeper

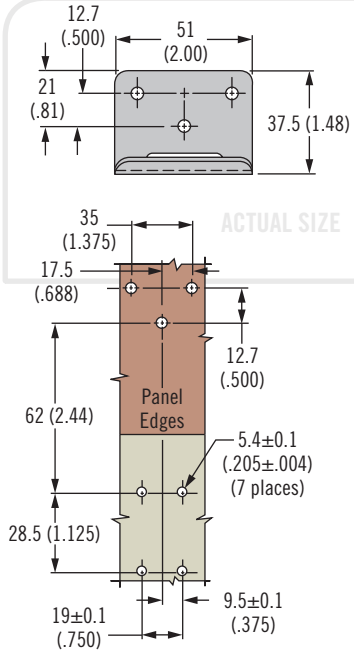

Tool Operated (spring loaded shown)

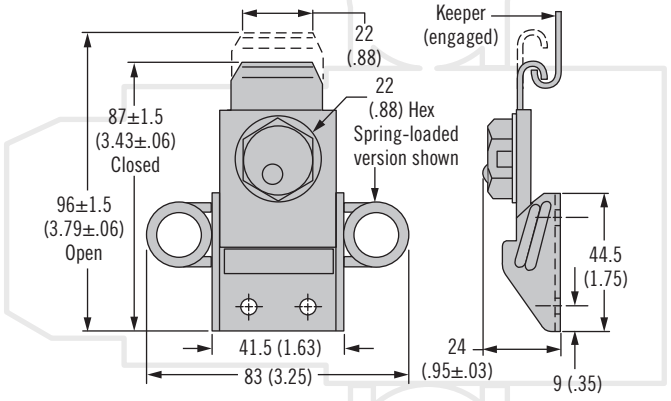

Latch Part Number	
Padlockable Riveted Hex Cam	K5-2754-07
Padlockable Riveted Flat Cam	K5-1993-07
Padlockable Flat Cam, Spring Loaded	K5-1994-07
Key Lockable	K5-2813-07
Tool Operated, Spring Loaded	K5-2819-07
Tool Operated, Riveted	K5-2818-07
Keeper Part Number	
Keeper	K5-2811-07
Keeper, Padlockable	K5-1736-07

R2 Draw Latch

Concealed · Panel Fastening

- **Provides a high strength concealed joint**
- **Operates quickly with a hex wrench**
- **Self adjusts to ensure a tight connection**

Material and Finish

Steel, galvanized

Performance Details

Tab, Shallow, and Mortise Mount:
Average ultimate tensile load: 6200 N (1400 lbf)

Average ultimate shear load: 8900 N (2000 lbf)

Front Mount: Average ultimate tensile load: 4000 N (900 lbf)

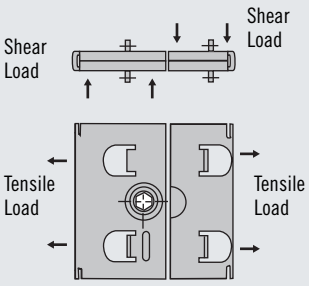

Latch

Tab Mount

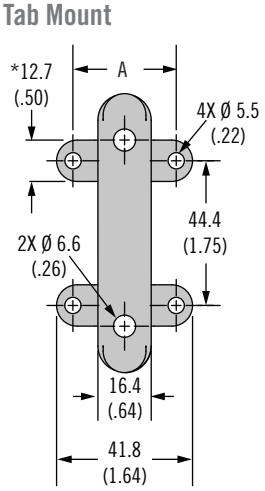

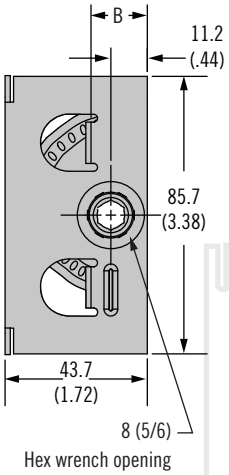

Receptacle

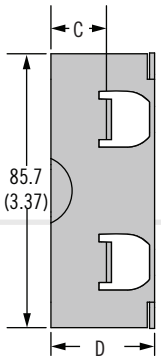

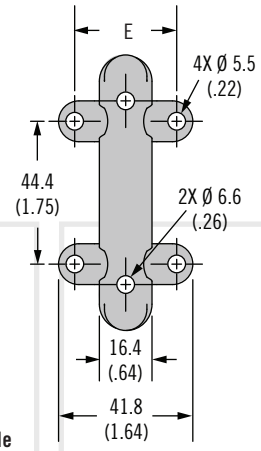

*Typical on latch and receptacle

ACTUAL SIZE

ACTUAL SIZE

Mortise Mount

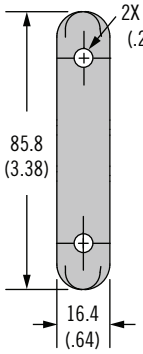

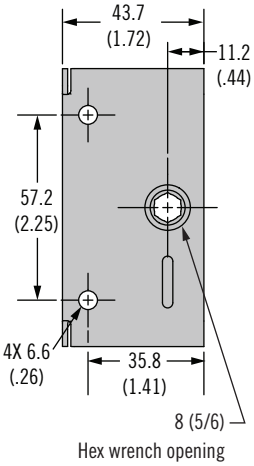

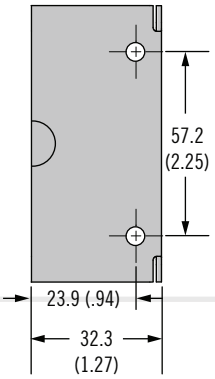

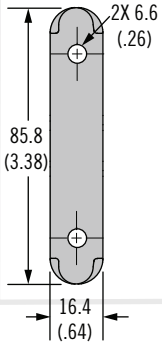

Front/Rear Mount

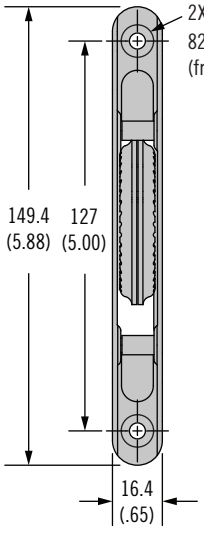

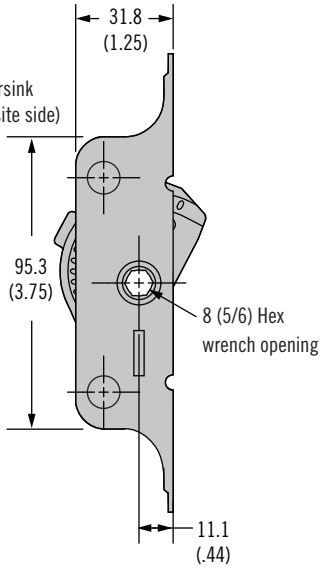

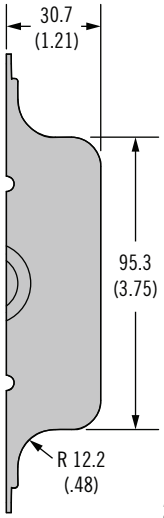

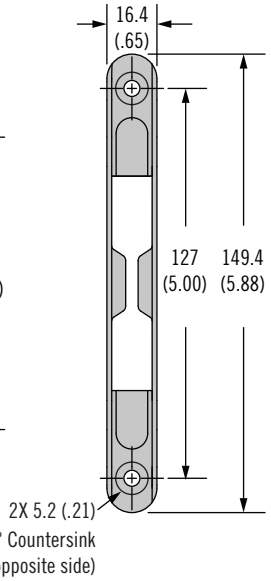

Dimensions in millimeters (inch) unless otherwise stated

southco®

Tab Mount

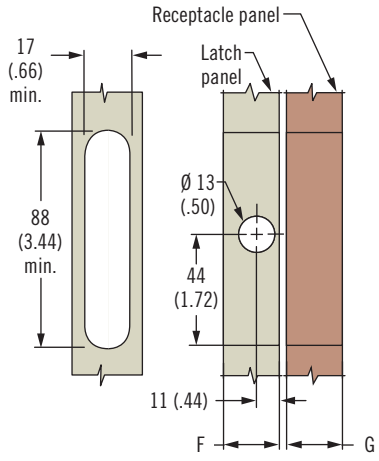

Mortise Mount

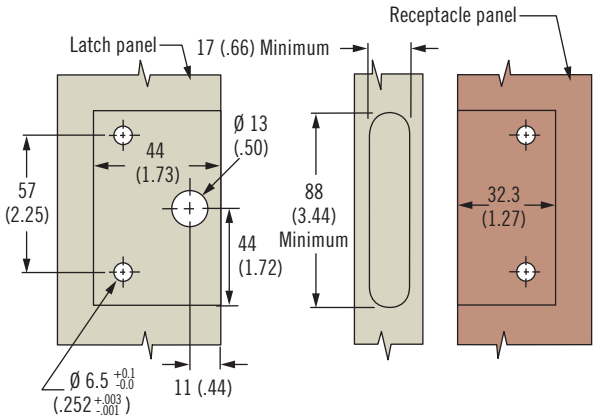

Front Mount

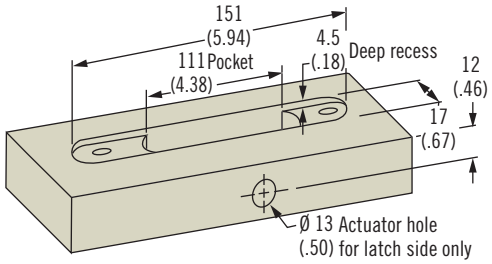

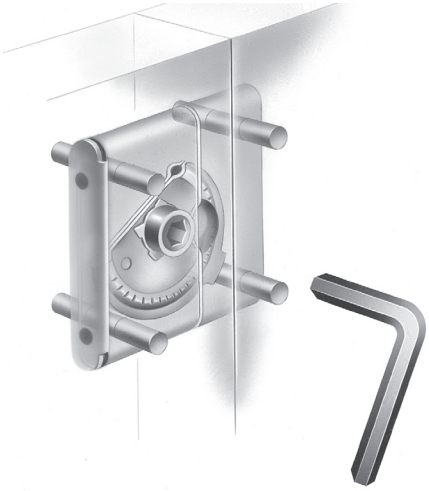

Rear Mount

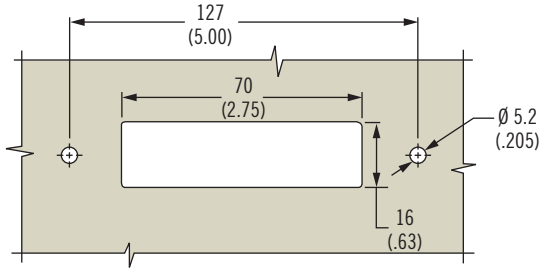

Mounting Style	Part Number		A	B	C	D	E	F	G
Shallow Tab Mount	Latch	R2-0259-17	31.8 (1.25)	17.3 (.68)	17.3 (.68)	32.3 (1.27)	31.8 (1.25)	19 (.75)	19 (.75)
	Receptacle	R2-0257-17							
Deep Tab Mount	Latch	R2-0169-17	28.7 (1.13)	30.2 (1.19)	38.1 (1.50)	52.1 (2.05)	28.7 (1.13)	32 (1.25)	38 (1.5)
	Receptacle	R2-0160-17							
Mortise Mount	Latch	R2-0055-17							
	Receptacle	R2-0002-17							
Front/Rear Mount	Latch	R2-0267-17							
	Receptacle	R2-0268-17							

Installation Notes

Tab Mount: Install with Ø 5 (.205) rivets or M5 (No. 10) screws (not supplied)

Mortise Mount: Install with Ø 6 (1/4) rivets or M6 (1/4) screws (not supplied). A 1.6 (.06) gap should be maintained between latch and receptacle.

Front Mount - Wood application: Install with M5 (No. 10) flat head screws (not supplied). Note: Latch strength is dependant on mounting hardware and installation material

Rear Mount - Metal application: Install with 5 (.196) flathead rivets or M5 (No. 10) screws. Note: Maximum metal panel thickness should be 2.5 (.10)

Accessories

Actuation tool
Part number: 29-0059-02

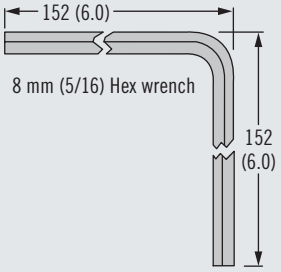

Part Number

See table

Order latch and receptacle separately

R5 Draw Latch

Concealed · Mortise Mount

- **High tensile load**
- **Consistent pull-up**
- **Concealed installation**

Material and Finish

Steel, zinc galvanized

Performance Details

Average ultimate tensile load:
11,100 N (2500 lbf)

Average ultimate shear load:
68,180 N (15,327 lbf)

Installation Notes

Install assembly with Ø 6 (1/4) rivets or M6 (1/4) screws (not supplied)

Accessories

Actuation tool
Part number: 29-0059-02

Notes

Operating force
To open: 4 N•m (35 in•lbf)
To close: 4 N•m (35 in•lbf)

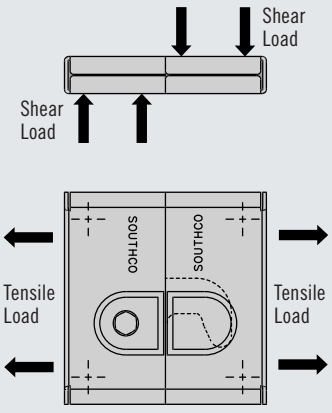

Part Number

See table

Order latch and receptacle separately

Latch

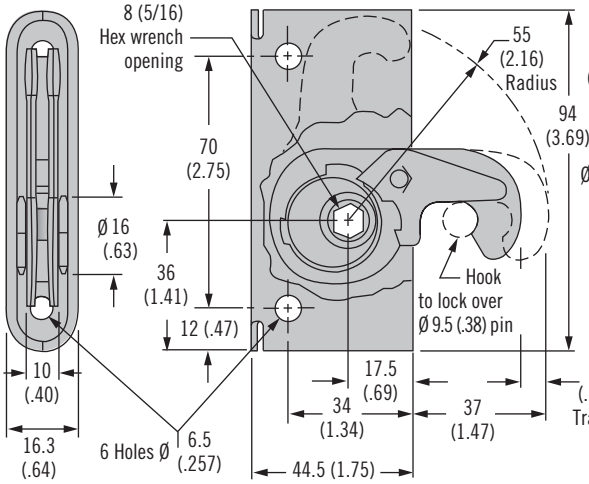

Receptacle

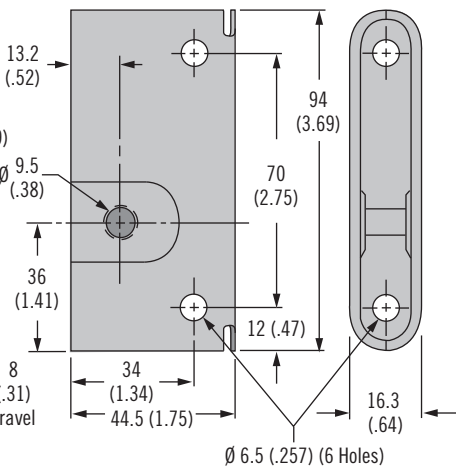

Recessed Pocket

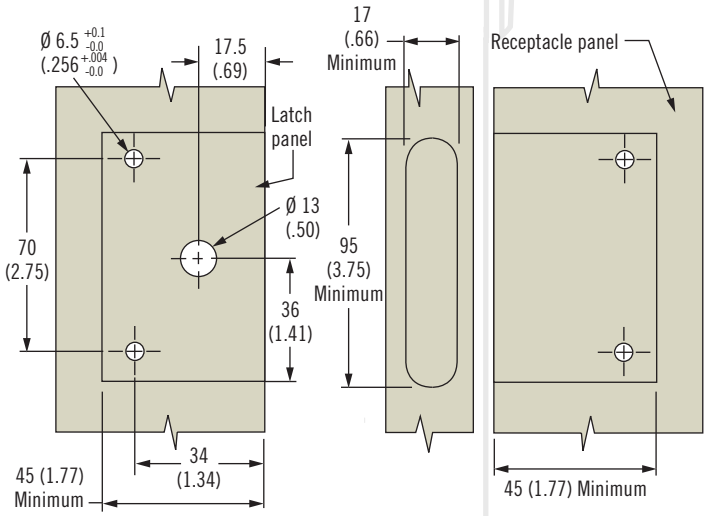

Side Mount

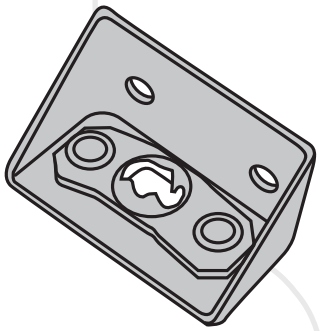

ACTUAL SIZE

Accessories

Actuation Tool

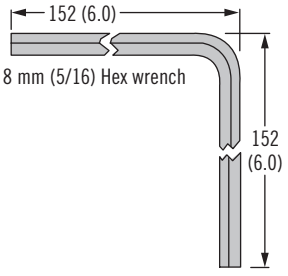

Part Number	
Latch	**Receptacle**
R5-0074-17	R5-0079-17

Dimensions in millimeters (inch) unless otherwise stated

C7 Draw Latch

Flexible · Over-center

Small

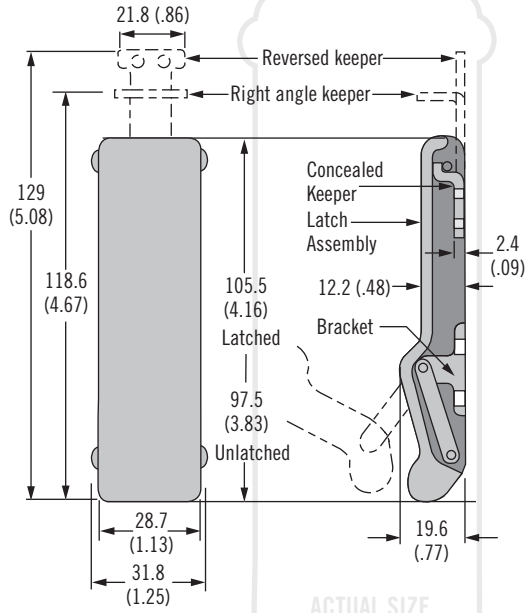

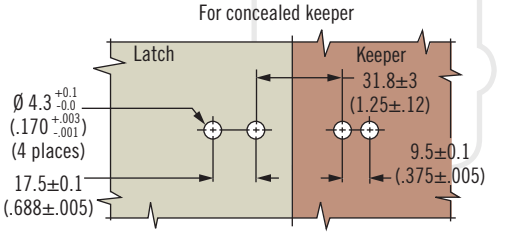

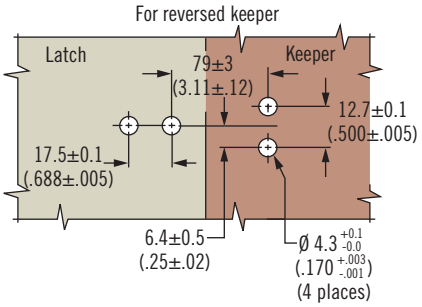

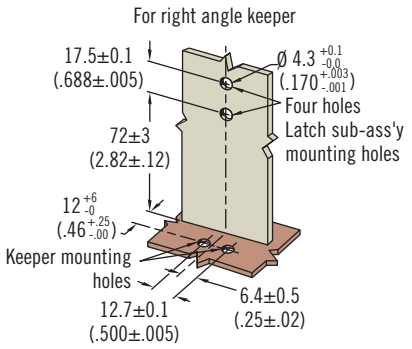

Large

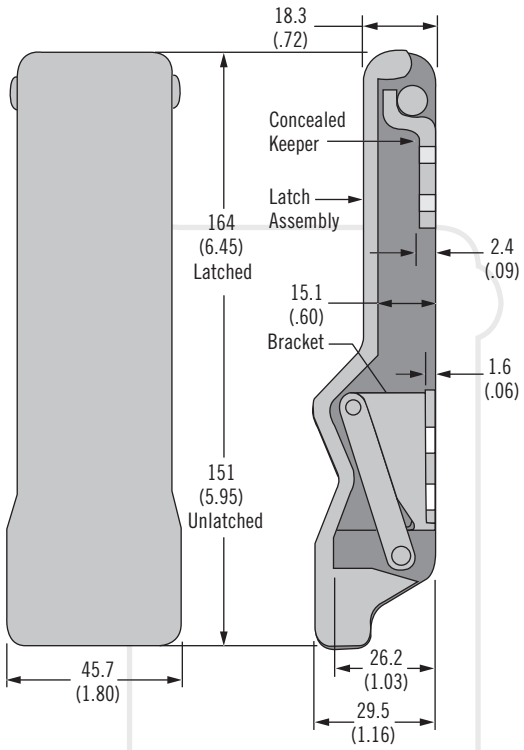

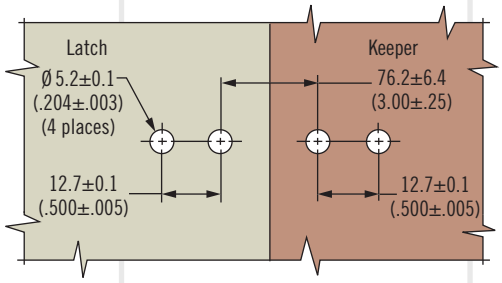

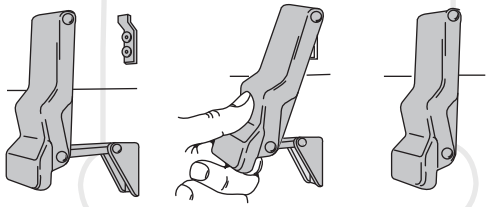

Size	Keeper Style	Assembly Part Number
Small	Concealed	C7-10
	Reverse Keeper	C7-11
	Right Angle Keeper	C7-12
Large	Concealed	C7-20

- **Low profile design**
- **Non-corrosive materials**
- **Cushions impact and accommodates misalignment**

Material and Finish

Latch:
Thermoplastic elastomer, black
Link and bushings:
Glass-filled nylon
Keeper and bracket: Stainless steel

Performance Details

Small:
Clamping force: 49 N (11 lbf)

Large:
Clamping force: 176 N (40 lbf)

Flammability rating: UL94-HB

Installation Notes

Small:
Install assembly with four Ø 4 (.170) rivets or M4 (No. 8) screws (not supplied)

Large:
Install assembly with four Ø5 (.204) rivets or M5 (No. 10) screws (not supplied)

Part Number

See table

Assembly complete with keeper

37 Draw Latch

Flexible · Over-center · Lever assist

- **Flexible body compensates for misalignment**
- **Absorbs and reduces vibration**
- **Detent lever resists accidental opening**

Material and Finish

EPDM rubber and glass-filled nylon black with stainless steel pins

Performance Details

Clamping forces up to 475N (107lbf)

Installation Notes

For ØD = 5.5, install using M5 (No. 10) screws
For ØD = 6.6, install using M6 (1/4) screws (not supplied)

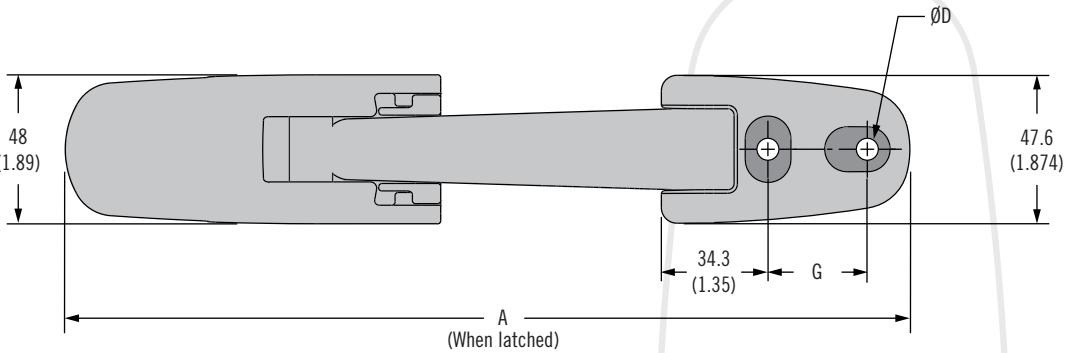

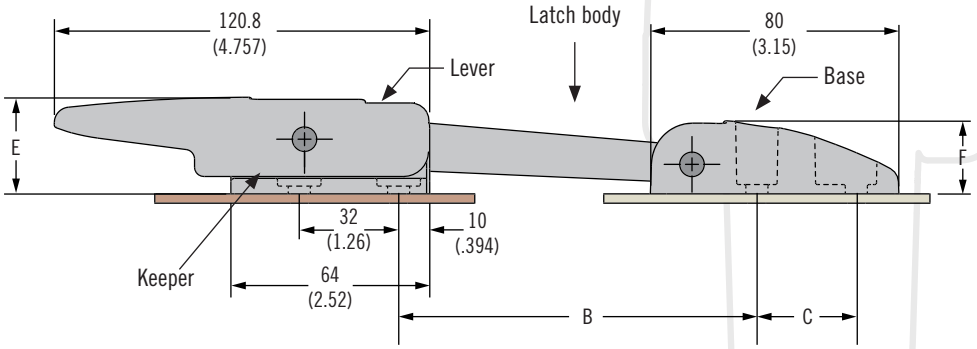

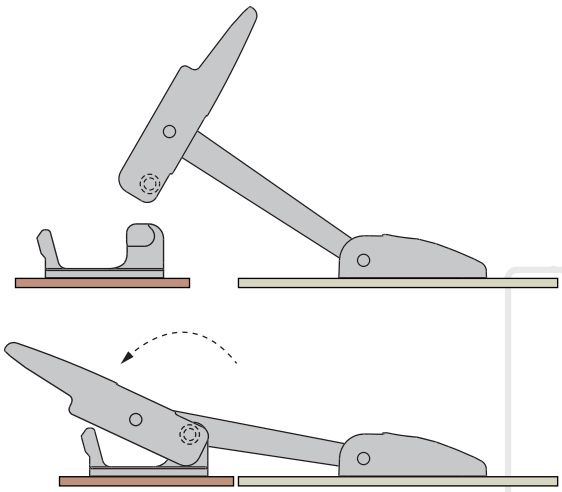

ACTUAL SIZE

Part Number

See table

Assembly complete with keeper

Part Number	Nominal Clamp Force N (lbf)	Dimensions					
		A	B	C	Ø D	E	F
37-30-294-60	110 (25)	254 (10)	97 (3.82)	25.4 (1.00)	5.5 (.217)	31.1 (1.22)	23.5 (.93)
37-30-297-60	190 (43)	379 (15)	222 (8.74)				
37-40-295-60	350 (79)	300 (12)	144 (5.67)	32 (1.25)	6.6 (.260)		
37-40-305-60	475 (107)					38.6 (1.52)	29 (1.14)

Dimensions in millimeters (inch) unless otherwise stated

F7 Draw Latch

Flexible · Pull type

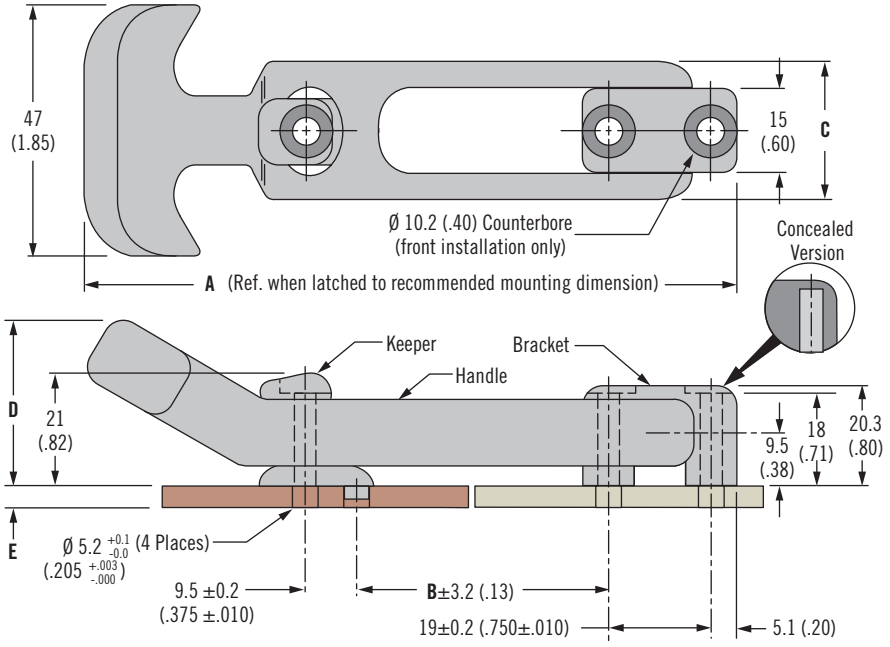

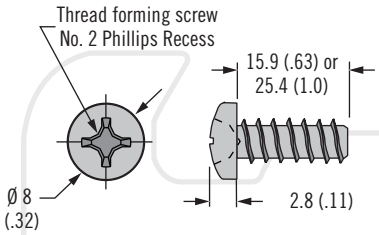

- **Flexible one piece molded latch**
- **UV resistant**
- **Absorbs and reduces vibration**

Material and Finish

Thermoplastic elastomer and glass-filled nylon, black
Screw: Stainless steel, passivated

Performance Details

Clamping force
Small: 58 N (13 lbf)
Medium: 84 N (19 lbf)
Large: 98 N (22 lbf)
Flammability rating: UL94-HB

Installation Notes

Concealed:
Install assembly with thread forming screws (order separately).
Maximum tightening torque
2.0 N⍉m (18 in⍉lbf)
Front installation:
Install assembly with M5 (No. 10) screw or Ø 5 (3/16) rivet (not supplied)

Part Number				Installation Method	Dimensions				
Size	Latch	Keeper	Screws (3 per bag)		E	A	B	C	D
Small	F7-530	F7-537	~	Front	~	112 (4.81)	41 (1.6)	25.4 (1.00)	31 (1.23)
	F7-540	F7-547	F7-548-3	Concealed (thread forming)	up to 8.0 (.32)				
			F7-558-3	Concealed (thread forming)	8.1 - 17.5 (.32 - .69)				
Medium	F7-630	F7-537	~	Front	~	167 (6.6)	72 (2.83)	32 (1.25)	29 (1.13)
	F7-640	F7-547	F7-548-3	Concealed (thread forming)	up to 8.0 (.32)				
			F7-558-3	Concealed (thread forming)	8.1 - 17.5 (.32 - .69)				
Large	F7-730	F7-537	~	Front	~	221 (8.7)	117 (4.6)	32 (1.25)	29 (1.13)
	F7-740	F7-547	F7-548-3	Concealed (thread forming)	up to 8.0 (.32)				
			F7-558-3	Concealed (thread forming)	8.1 - 17.5 (.32 - .69)				

Part Number

See table
Order latch, keeper and screws (if required) separately

37 Draw Latch

Flexible · Pull type · Tab handle

- **Flexible one piece molded latch**

Material and Finish

Small:
EPDM rubber and stainless steel
Medium:
EPDM rubber and steel, zinc plated

Performance Details

Small:
Average clamping force:
20.9 N (4.7 lbf)

Medium:
Average clamping force:
26.2 N (5.9 lbf)

Operating temperature range:
-20°C (0°F) to 95°C (200°F)

Installation Notes

Install assembly with four Ø 3 (.125) rivets or M3 (No. 4) screws (not supplied)

Part Number

See table

Assembly complete with keeper

Small

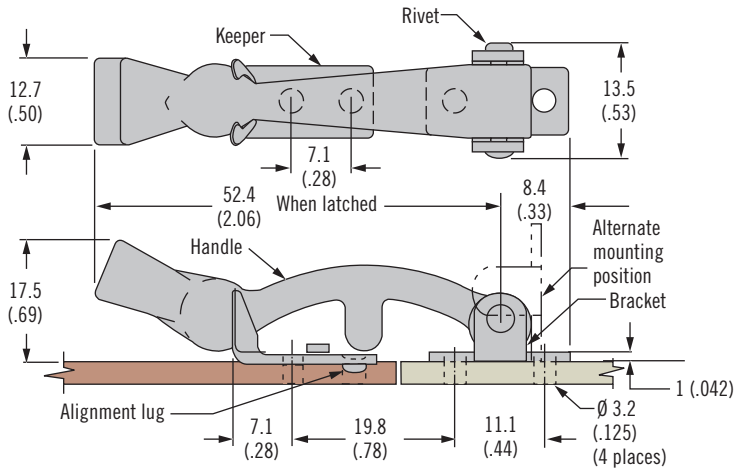

Medium

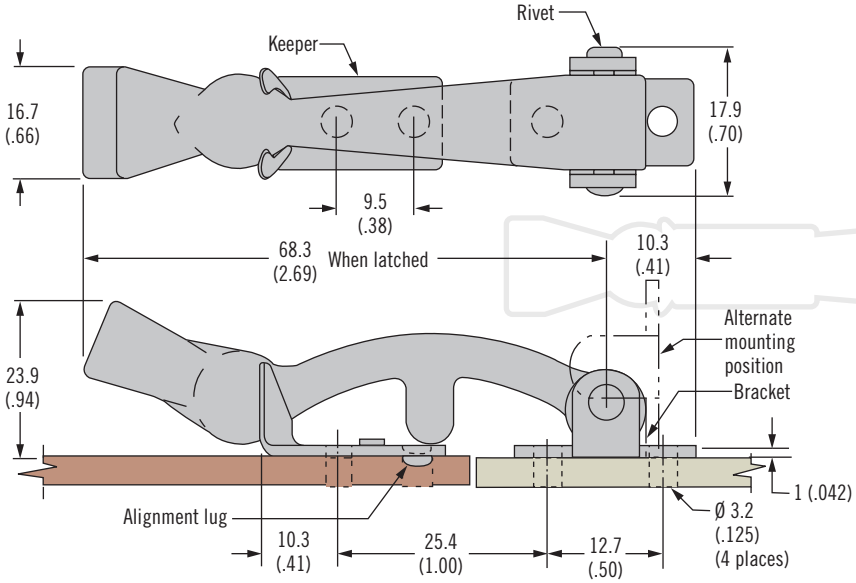

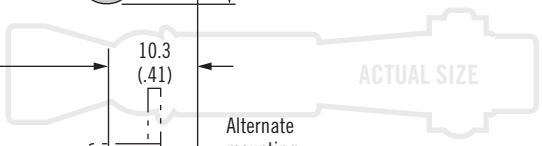

Part Number		
Series	**Steel**	**Stainless Steel**
Small	~	37-10-051-20
Medium	37-10-061-10	~

Dimensions in millimeters (inch) unless otherwise stated

37 Draw Latch

Flexible · Pull type · T-handle

Small

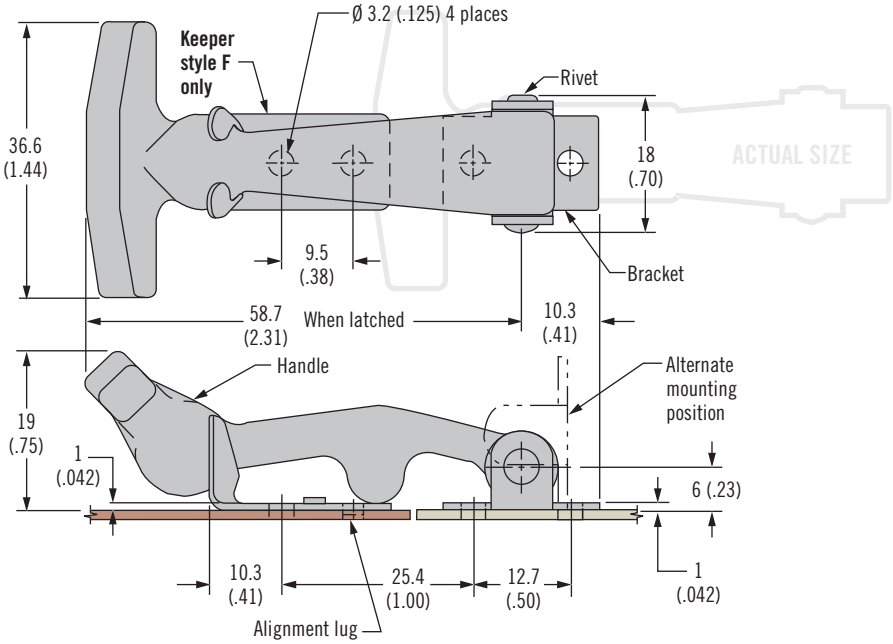

Medium

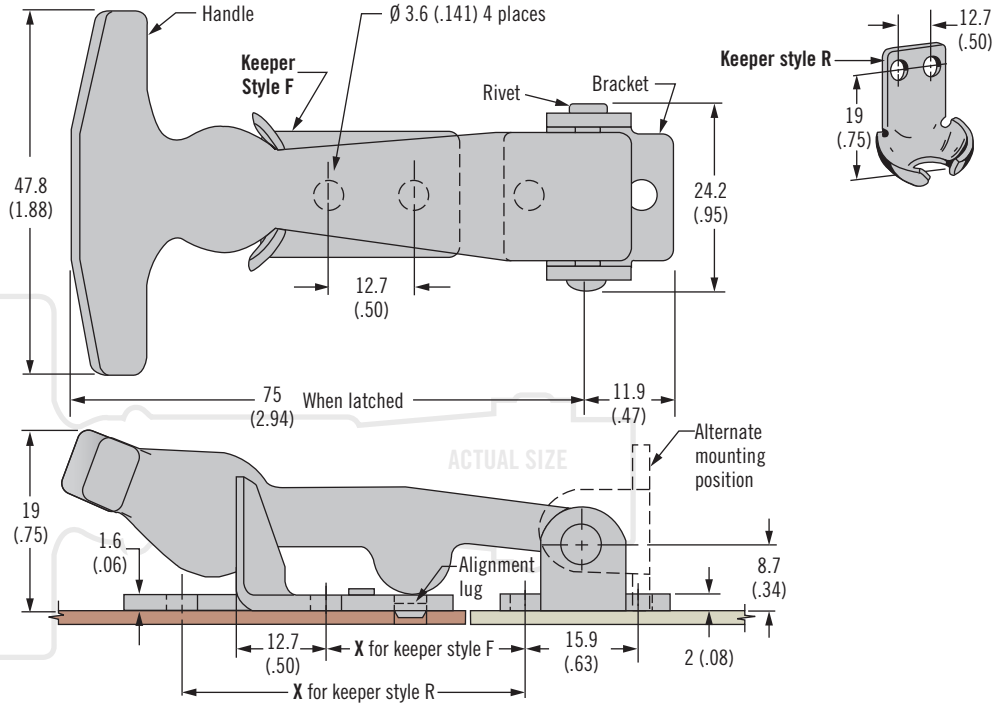

- **Flexible one piece molded latch**

Material and Finish

EPDM rubber and stainless steel or steel, zinc plated

Performance Details:

Average clamping force:
Small: 26 N (6 lbf)

Medium: 39 N (8.7 lbf)

Operating temperature range:
-20°C (0°F) to 95°C (200°F)

Installation Notes

Small:
Install assembly with four Ø 3 (.125) rivets or M3 (No. 4) screws (not supplied)

Medium:
Install assembly with four Ø 3.6 (.141) flat head rivets or M3.5 (No. 5) screws (not supplied)

Small Size Part Number	
Steel	Stainless Steel
37-10-065-10	37-10-065-20

Medium Size Part Number				
Keeper Style	X	Latch Shipped Assembled		Latch Shipped Unassembled
		Steel	Stainless Steel	Steel
F	31.8 (1.25)	37-10-071-10	37-10-071-20	37-10-072-10
R	56.4 (2.22)	37-20-071-10	37-20-071-20	37-20-072-10

Part Number

See table

Assembly complete with keeper

37 Draw Latch

Flexible · Pull type · T-handle

- **Flexible one piece molded latch**

Material and Finish

EPDM rubber and stainless steel

Performance Details

Average clamping force:
49 N (11 lbf)

Operating temperature range:
-20°C (0°F) to 95°C (200°F)

Installation Notes

Install assembly with four Ø 5(.188) rivets or M5 (No. 10) screws (not supplied)

Part Number

See table

Assembly complete with keeper

Large

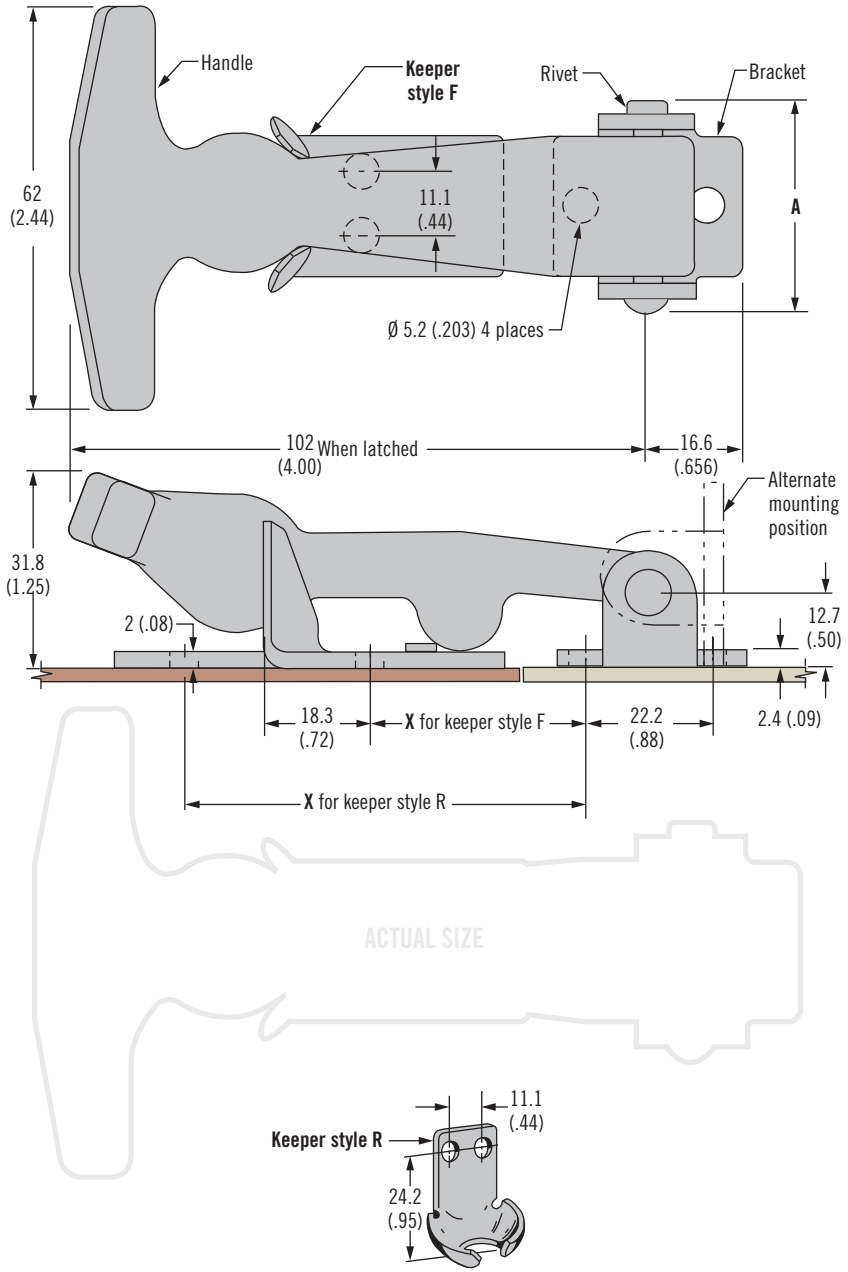

Part Number						
Keeper Style	X	Latch shipped assembled			Latch shipped unassembled	
		A	Steel	Stainless Steel	A	Steel
F	38.1 (1.50)	31.8 (1.25)	37-10-086-10	37-10-086-20	34 (1.34)	37-10-087-10
R	73 (2.88)		37-20-086-10	37-20-086-20		37-20-087-10

Dimensions in millimeters (inch) unless otherwise stated

37 Draw Latch

Flexible · Pull type · T-handle

Extra Large

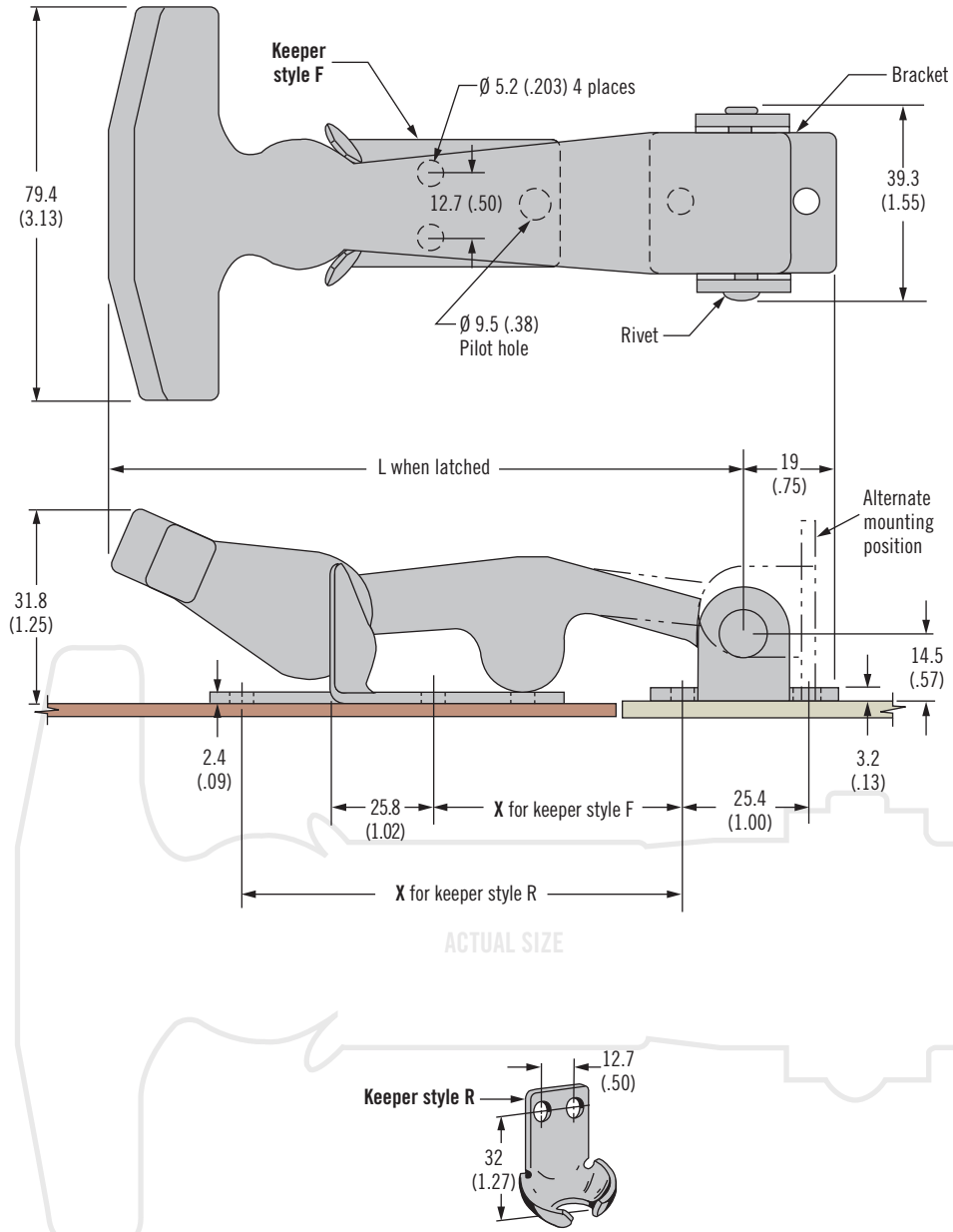

- **Flexible one piece molded latch**

Material and Finish

EPDM rubber and stainless steel or steel, zinc plated

Performance Details

Average clamping force: 84 N (19 lbf)

Operating temperature range: -20°C (0°F) to 95°C (200°F)

Installation Notes

Install assembly with four Ø 5 (.188) rivets or M5 (No. 10) screws (not supplied)

Part Number						
Series	Keeper Style	L	X	Latch Shipped Assembled		Latch Shipped Unassembled
				Steel	Stainless Steel	Steel
100	F	130.2 (5.13)	50.8 (2.00)	37-10-101-10	37-10-101-20	37-10-102-10
	R		90.5 (3.56)	37-20-101-10	37-20-101-20	37-20-102-10
130	F	247.7 (9.75)	165.1 (6.50)	37-10-131-10	37-10-131-20	~
	R		204.8 (8.06)	37-20-131-10	37-20-131-20	~

Part Number

See table

Assembly complete with keeper

HINGES

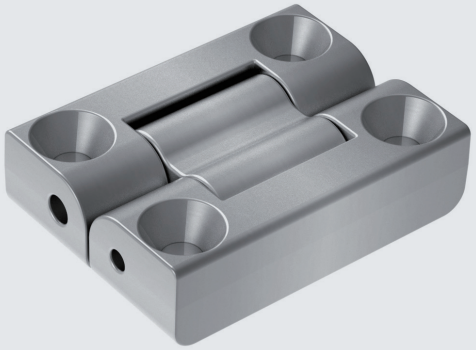

Hinges & Positioning Technology

Need to tilt or swivel a flat panel display to eliminate glare? Adjust a headrest for comfort? Position a keyboard angle for optimal ergonomics? Southco's range of hinges and positioning mechanisms go well beyond a simple hinge. Our extensive range of solutions for managing door and panel motion can bring new functionality and performance to any application.

Need to attach or remove a door without tools, hold it open or closed? Southco has a hinge solution for you. How strong a hinge do you need? With materials ranging from light-weight plastics to heavy-duty cast stainless steel, and a wide range of sizes and installation styles, Southco has a hinge sized to your application needs. Flush door, offset door, wood panel, or metal panel? We have a hinge style to fit most common door and frame configurations.

Don't see what you need? All of Southco's hinge solutions can be customized to suit the specific needs of individual applications.

External Hinges

Southco's broad line of external hinges provides an easy-to-install solution.

- External mounting maximizes available space inside the enclosure
- Wide range of mounting options to suit most door and frame configurations

E6

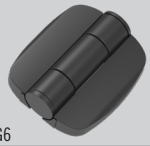
G6

C6

N6

96

EH

Embedded Hinges

SOUTHCO® embedded hinges can be designed-in to become an integral part of any application.

- Shapes and sizes designed specifically to allow easy packaging within the envelope of the application
- Mold-in or press-in with snap-on covers
- Seamlessly integrate position control features into any application

G7

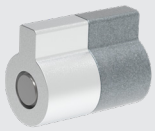
ST

ST

Concealed Hinges

SOUTHCO® concealed hinges are mounted inside the application, making the hinges invisible when the door is closed.

- Allow the application's industrial design goals to shine through
- Combine hidden mounting with simple installation

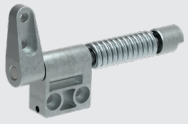
ST

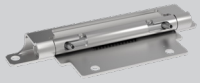
F6

F6

R6

Hinges

Selection guide

MOUNTING TYPE

External
Maximizes interior application space

Embedded
Integrates the hinge into the application design

Concealed
Allows a clean aesthetic for optimum styling

POSITIONING TYPE

Detent
Audible and tactile feedback informs the user that the panel is held at a pre-determined angle

Bi-Stable
Flip-open/flip-closed functionality drives the panel to one of two fixed positions

Torque
Precise, smooth & controlled resistance holds the panel securely at any desired position

Counterbalance
Lift assistance reduces user efforts for heavier panels while holding securely at any angle

HINGE SERIES				MATERIAL				
				Aluminium	Zinc	Steel	Stainless Steel	Plastic
FREE SWINGING	Concealed	EH			✔			✔
		N6					✔	
		R6				✔	✔	
REMOVABLE	Concealed	F6				✔	✔	
		96			✔	✔	✔	✔
POSITIONING	Embedded	C6 / G6						✔
		E6						✔
				✔	✔		✔	✔
		ST	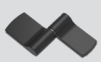		✔			
					✔			
					✔			
					✔			
		G7						✔
		AH		✔			✔	
COUNTER BALANCE		CA				✔		
		CB		✔				

Dimensions in millimeters (inch) unless otherwise stated

Use this selection guide to choose the right hinge for your application

OPERATION						
Free Operating minimal resistance to move the door	**Removable** simple door removal without tools	**Detent / Bistable** hold open and/or closed	**Articulating** pivot one leaf around the other for flush application	**Adjustable Torque** adjust to suit multiple door sizes and weights for preferred feel	**Constant Torque** preset torque for consistent holding power	**Counterbalance** optimise the opening and closing forces in all positions
✔						
✔						
✔			✔			
✔	✔					
✔	✔					
✔		✔				
✔				✔		
✔					✔	
					✔	
					✔	✔
					✔	
					✔	
		✔				
✔			✔		✔	
						✔
						✔

Hinges

Overview

Versatility and simplicity in action

Hinging requirements vary significantly for different construction methods and aesthetic goals. Use the guide below to find the right hinge for your application.

Application Styles

External

External Hinges

- A variety of styles and materials to complement all applications
- Maximize interior space within the application

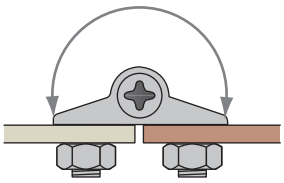

Surface Mount

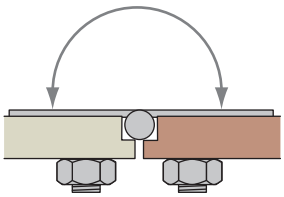

Flush Mount

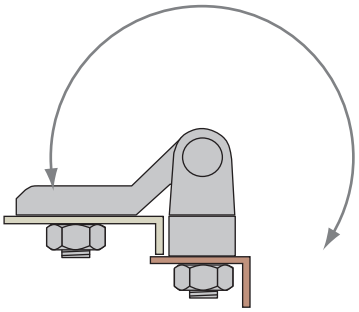

Offset Mount

Concealed

Concealed Hinges

- Hidden to let you control the aesthetics
- Eliminate visible attack points for vandal resistance

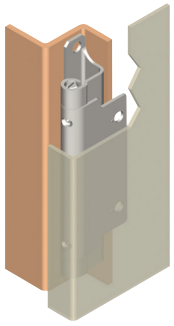

C-Frame Concealed Pivot

End Mount Concealed Pivot

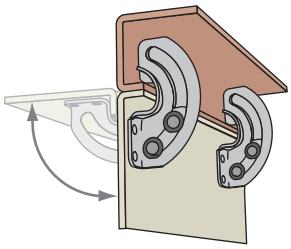

Virtual Pivot

Embedded

Embedded Hinges

- An integral part of the solution
- Add positioning features to enhance your product

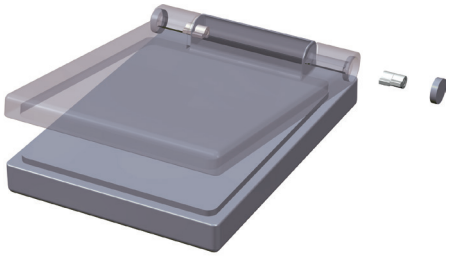

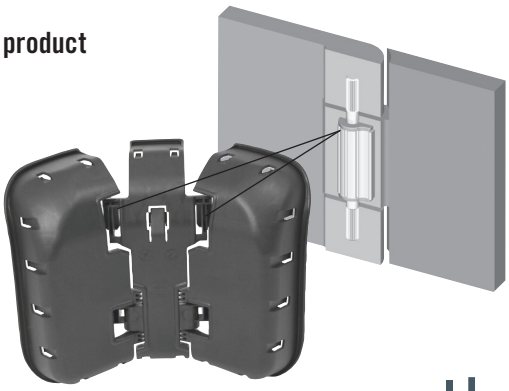

Dimensions in millimeters (inch) unless otherwise stated

Product Features

Door Removal

- Removable hinges allow doors to be easily removed without tools
- Hinges with door removal feature assist the assembly, service and installation of doors

Southco offers two types of door removal hinges:

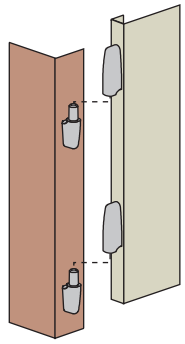

Lift-Off

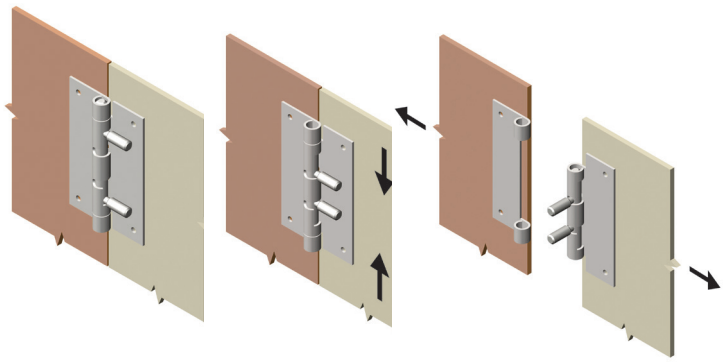

Removable / Retracting Pin

Installation Method

- *SOUTHCO*® hinges offer a range of installation methods to suit the application construction

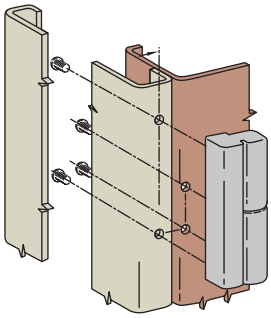

Tapped Hole / Rear Mount Hardware

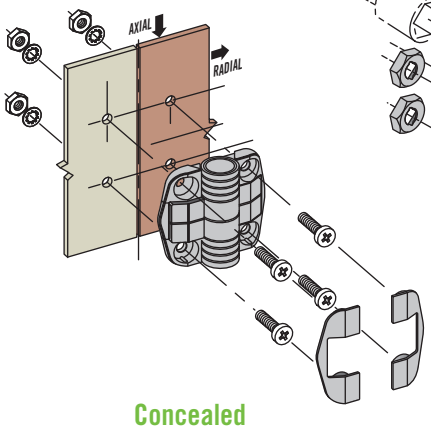

Concealed Hardware

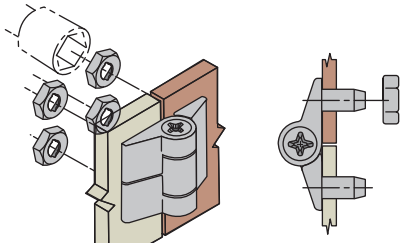

With Integrated Mounting Studs

Hinges

Overview

Positioning Technology

Southco´s wide range of solutions for controlling motion can be used to enhance functionality in almost any application. The range of solutions can be as simple as the integration of constant torque systems into a standard hinge, or as sophisticated as a fully customized system for positioning or deployment. Backed by Southco´s reputation for engineered reliability, most positioning technology solutions have life-long performance with no requirement for maintenance or adjustment.

SOUTHCO® position control hinges are available in various styles:

Torque

Torque Hinges

- **Allow for infinitely variable positioning**
- **Holds securely at all positions**

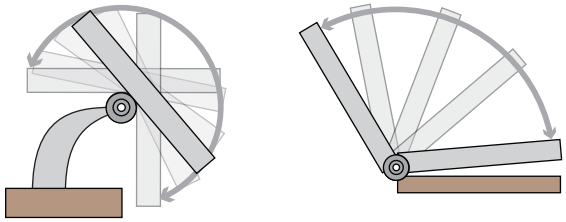

Constant Torque

- **Pre-set at precise torque values**
- **Maximum reliability, with no need for adjustment**

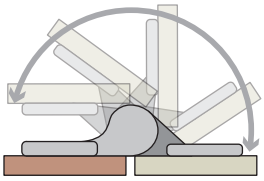

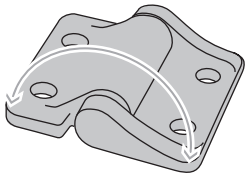

Adjustable Torque

- **Allow end user customization**

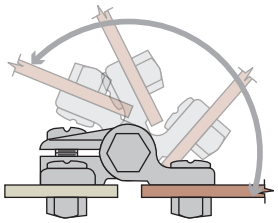

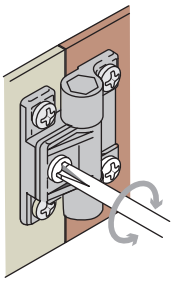

Detent

Detent / Bi-Stable Hinges

- **Hold or seek a pre-defined position**
- **Can be used to hold door shut without a latch**

Counterbalance & Stored Energy Hinges

- **Enable heavy panels to operate with ease**
- **Allow panels to "pop open" when a latch is released**

Dimensions in millimeters (inch) unless otherwise stated

Customized solutions

When the requirements of your application go beyond our standard product line, Southco´s global engineering team is available to create a customized solution to meet your needs.

Infotainment deployment system

- Stored energy allows for self-opening to 20 degrees
- Constant torque provides infinitely adjustable viewing angle
- Detent click provides a signal to prevent over-travel
- Integrated display power switching

Pop-up display screen

- Stored energy drives screen deployment
- Deploys vertically with controlled speed
- Constant torque allows for infinite positioning

Tilt and swivel devices

- Safety feature activates display only when rear facing
- Constant torque provides multi-axis positioning
- Lock out device ensures correct folding sequence

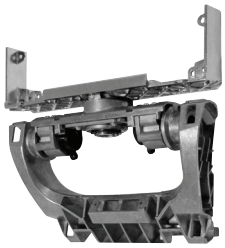

Integrated headrest assembly

- Integrated constant torque allows for consistent wing positioning
- High cycles allow for lifetime usage
- Complete comfort headrest frame

Display mounts

- Integrated counterbalance allows for fingertip tilt, swivel and pan adjustment
- Structural design provides mechanical support and integrated cable management
- Adapted to suit challenges from home interiors to harsh service environments

E6 Hinge

Position control · Constant torque

- **Holds in every position**
- **No adjustment required**
- **Long cycle life**

Material and Finish

Large: Zinc alloy, black paint
Medium: Aluminum alloy, black paint

Performance Details

Cycle performance: 20,000 cycles within ± 20% of static torque specification

Radial load:
Large:
Maximum static load: 200 N (45 lbf)
Average ultimate load:
11000 N (2470 lbf)

Medium:
Maximum static load: 155 N (35 lbf)
Average ultimate load:
3000 N (675 lbf)

Axial load:
Large:
Maximum static load: 200 N (45 lbf)
Average ultimate load:
2800 N (630 lbf)

Medium:
Maximum static load: 155 N (35 lbf)
Average ultimate load:
1600 N (360 lbf)

Part Number

See table

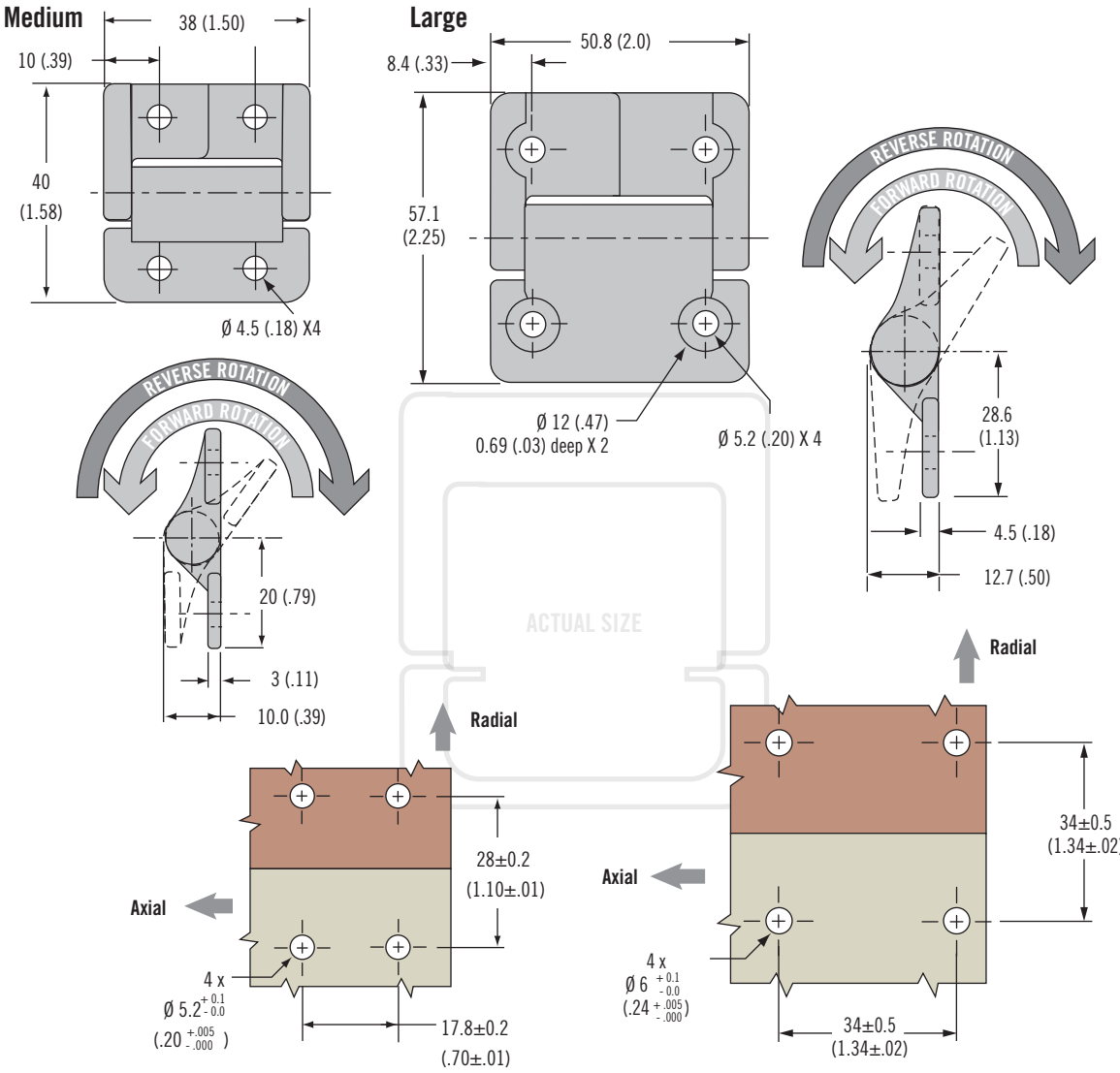

Symmetric

	Part Number	Symmetric Torque N·m
Medium	E6-10-200-50	Free operating
	E6-10-208-50	0.9 (8)
	E6-10-212-50	1.4 (12)
	E6-10-216-50	1.8 (16)
	E6-10-220-50	2.3 (20)
Large	E6-10-400-50	Free operating
	E6-10-416-50	1.8 (16)
	E6-10-420-50	2.3 (20)
	E6-10-430-50	3.4 (30)

Asymmetric

	Part Number	Forward Torque N·m	Reverse torque N·m
Medium	E6-10-212F-50	1.4 (12)	0.8 (7.2)
	E6-10-216F-50	1.8 (16)	1.1 (9.6)
	E6-10-220F-50	2.3 (20)	1.4 (12)
	E6-10-224F-50	2.7 (24)	1.6 (14.4)
	E6-10-212R-50	0.8 (7.2)	1.4 (12)
	E6-10-216R-50	1.1 (9.6)	1.8 (16)
	E6-10-220R-50	1.4 (12)	2.3 (20)
	E6-10-224R-50	1.6 (14.4)	2.7 (24)
Large	E6-10-420F-50	2.3 (20)	1.4 (12)
	E6-10-430F-50	3.4 (30)	2.0 (18)
	E6-10-440F-50	4.5 (40)	2.7 (24)
	E6-10-420R-50	1.4 (12)	2.3 (20)
	E6-10-430R-50	2.0 (18)	3.4 (30)
	E6-10-440R-50	2.7 (24)	4.5 (40)

Dimensions in millimeters (inch) unless otherwise stated

E6 Hinge

Position control · Constant torque

- **Holds in every position**
- **No adjustment required**
- **Long cycle life**

Material and Finish

Stainless steel
Internal steel and plastic components

Performance Details

Cycle performance: 20,000 cycles within ± 20% of static torque specification

Radial load:
Maximum static load: 200 N (45 lbf)
Average ultimate load:
13 kN (2,900 lbf)

Axial load:
Maximum static load: 200 N (45 lbf)
Average ultimate load:
4 kN (900 lbf)

Counterbore version

Countersink version

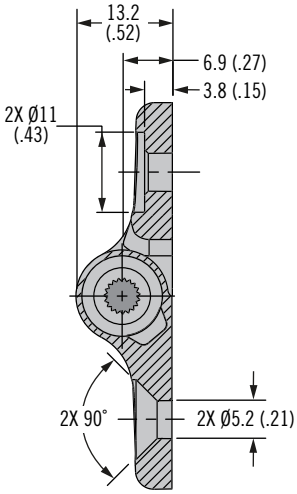

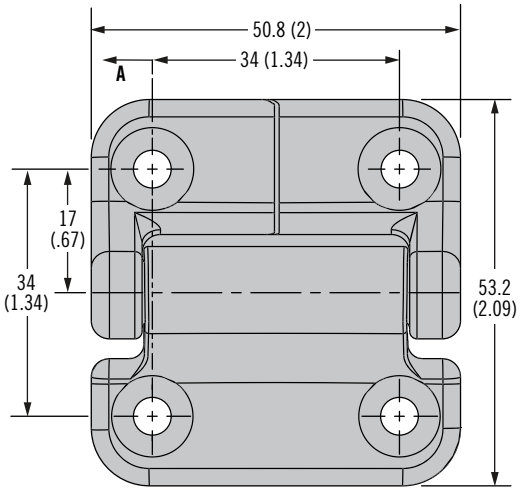

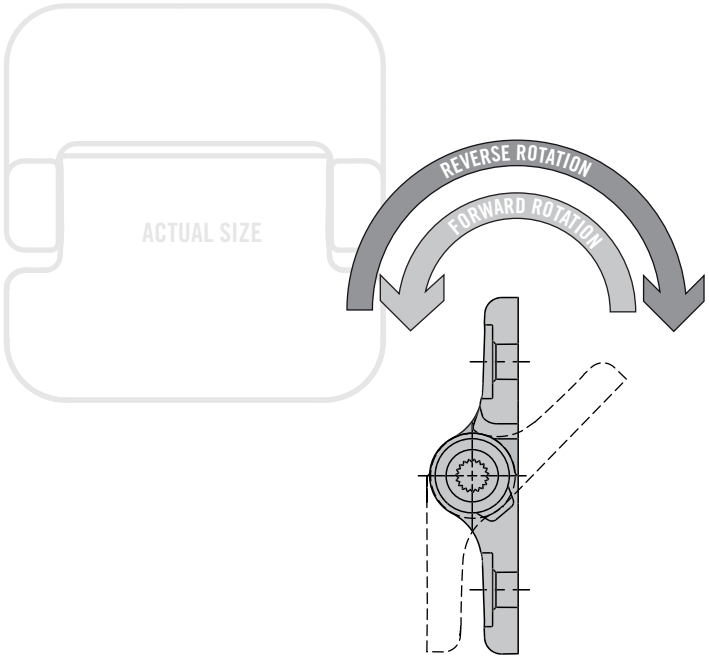

XX	Finish
24	Natural
85	High Gloss

Counterbore Part Number	Countersink Part Number	Forward Torque N•m (in•lbf)	Reverse Torque N•m (in•lbf)
E6-70-408S-XX	E6-71-408S-XX	0.90 (8.0)	
E6-70-416S-XX	E6-71-416S-XX	1.81 (16.0)	
E6-70-420S-XX	E6-71-420S-XX	2.26 (20.0)	
E6-70-430S-XX	E6-71-430S-XX	3.39 (30.0)	
E6-70-420F-XX	E6-71-420F-XX	2.26 (20.0)	1.54 (13.6)
E6-70-430F-XX	E6-71-430F-XX	3.39 (30.0)	2.30 (20.4)
E6-70-440F-XX	E6-71-440F-XX	4.52 (40.0)	3.08 (27.3)
E6-70-420R-XX	E6-71-420R-XX	1.54 (13.6)	2.26 (20.0)
E6-70-430R-XX	E6-71-430R-XX	2.30 (20.4)	3.39 (30.0)
E6-70-440R-XX	E6-71-440R-XX	3.08 (27.3)	4.52 (40.0)

Part Number

See table

E6 Hinge

Position control · Constant torque

- **Holds in every position**
- **No adjustment required**
- **Long cycle life**

Material and Finish

Zinc alloy body with hardened steel internal components

Performance Details

20,000 cycles within ±20% of static torque specification

Installation Notes

Screws not supplied

Calculate screw length using the following formula:
Door thickness + 6 (.236)

Part Number

See table

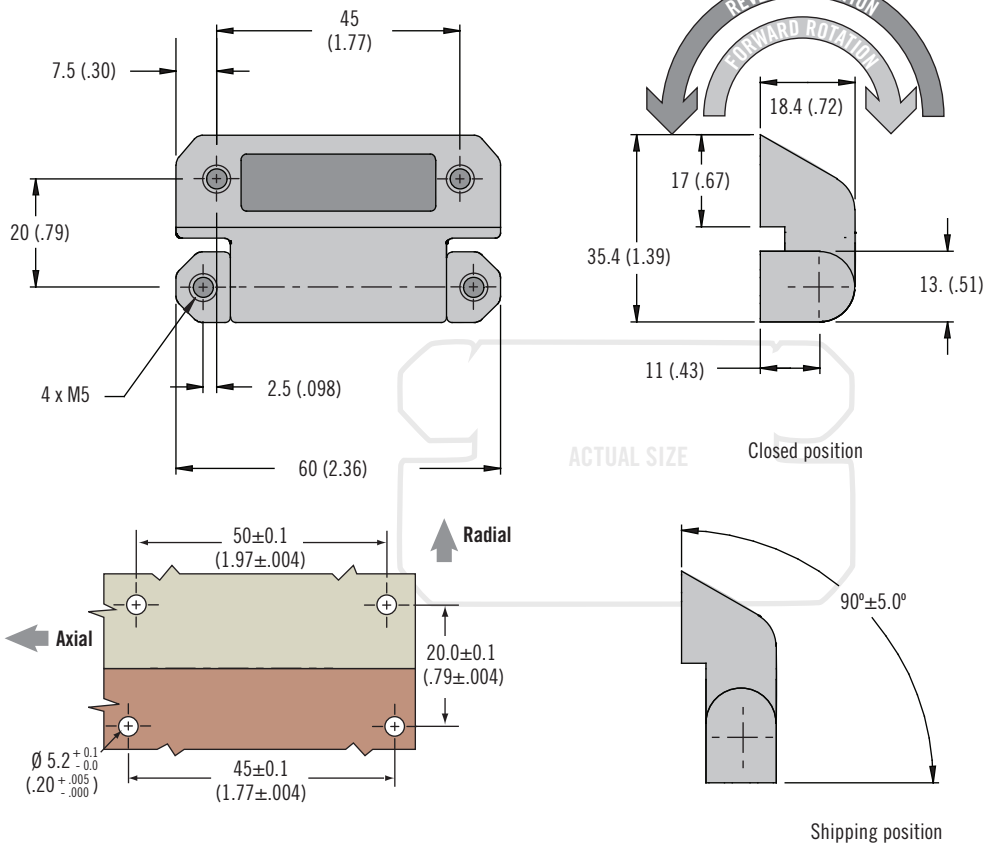

Symmetric

Part Number		Symmetric Torque N·m (in·lbf)
Black	Satin Chrome	
E6-60-400-50	E6-60-400-20	Free operating
E6-60-412S-50	E6-60-412S-20	1.36 N·m (12 in·lbf)
E6-60-420S-50	E6-60-420S-20	2.26 N·m (20 in·lbf)
E6-60-428S-50	E6-60-428S-20	3.16 N·m (28 in·lbf)
E6-60-436S-50	E6-60-436S-20	4.07 N·m (36 in·lbf)

Asymmetric

Part Number		Forward Torque N·m (in·lbf)	Reverse Torque N·m (in·lbf)
Black	Satin Chrome		
E6-60-420F-50	E6-60-420F-20	2.3 (20)	1.4 (12)
E6-60-428F-50	E6-60-428F-20	3.2 (28)	1.9 (16.8)
E6-60-436F-50	E6-60-436F-20	4.1 (36)	2.4 (21.6)
E6-60-444F-50	E6-60-444F-20	5 (44)	3 (26.4)
E6-60-420R-50	E6-60-420R-20	1.4 (12)	2.3 (20)
E6-60-428R-50	E6-60-428R-20	1.9 (16.8)	3.2 (28)
E6-60-436R-50	E6-60-436R-20	2.4 (21.6)	4.1 (36)
E6-60-444R-50	E6-60-444R-20	3 (26.4)	5 (44)

Dimensions in millimeters (inch) unless otherwise stated

E6 Hinge

Position Control · Constant Torque

- Holds in every position
- No adjustment required
- Long cycle life

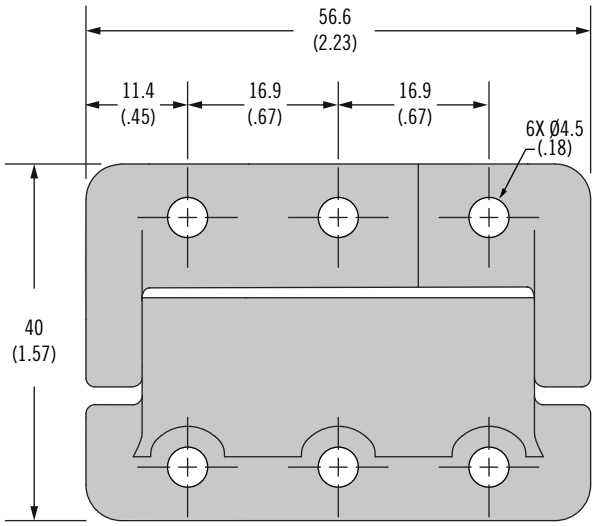

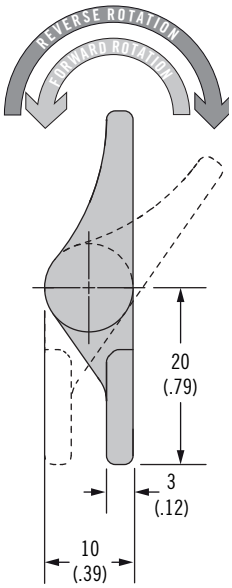

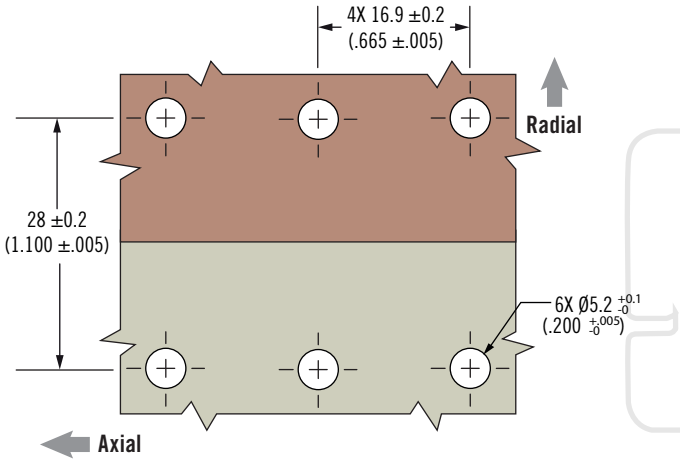

ACTUAL SIZE

Material and Finish

Aluminum alloy, black powder coat

Performance Details

Cycle performance
20,000 Cycles, see product drawing for details

Radial load:
Max. static load: 200 N (45 lbf)
Average ultimate load:
2200 N (500 lbf)

Axial load:
Max. static load: 200 N (45 lbf)
Average ultimate load:
1450 N (325 lbf)

Part Number

See table

Symmetric

Part Number	Symmetric Torque N·m (in·lbf)
E6-10E-200-50	Free operating
E6-10E-208-50	0.9 (8)
E6-10E-212-50	1.4 (12)
E6-10E-216-50	1.8 (16)
E6-10E-220-50	2.3 (20)
E6-10E-224-50	2.7(24)
E6-10E-230-50	3.4 (30)

Asymmetric

Part Number	Forward Torque N·m (in·lbf)	Reverse Torque N·m (in·lbf)
E6-10E-212F-50	1.4 (12)	0.8 (7.2)
E6-10E-216F-50	1.8 (16)	1.1 (9.6)
E6-10E-220F-50	2.3 (20)	1.4 (12)
E6-10E-224F-50	2.7 (24)	1.6 (14)
E6-10E-230F-50	3.4 (30)	2.0 (18)
E6-10E-240F-50	4.5 (40)	2.7 (24)
E6-10E-212R-50	0.8 (7.2)	1.4 (12)
E6-10E-216R-50	1.1 (9.6)	1.8 (16)
E6-10E-220R-50	1.4 (12)	2.3 (20)
E6-10E-224R-50	1.6 (14)	2.7 (24)
E6-10E-230R-50	2.0 (18)	3.4 (30)
E6-10E-240R-50	2.7 (24)	4.5 (40)

E6 Hinge

Position control · Constant torque

- **Holds in every position**
- **No adjustment required**
- **Long cycle life**

Material and Finish

Aluminum alloy, black powder coated

Performance Details

Cycle performance: 20,000 cycles within ± 20% of static torque specification

Radial load:
Max. static load: 2,000 N (450 lbf)
Average ultimate load:
4000N (900lbf)

Axial load:
Max. static load: 500 N (110 lbf)
Average ultimate load:
9,000 N (2,023 lbf)

Part Number

See table

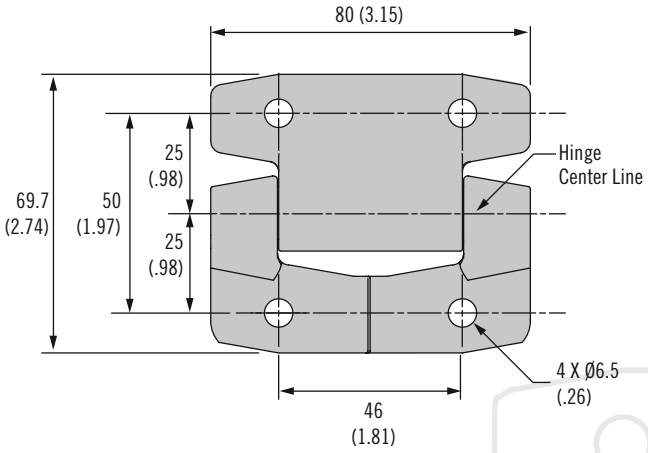

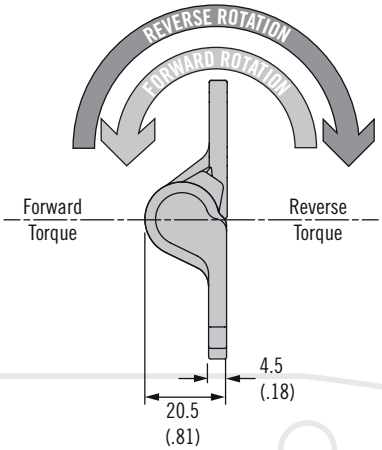

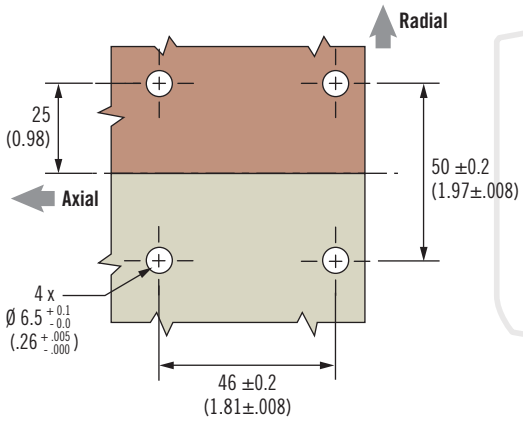

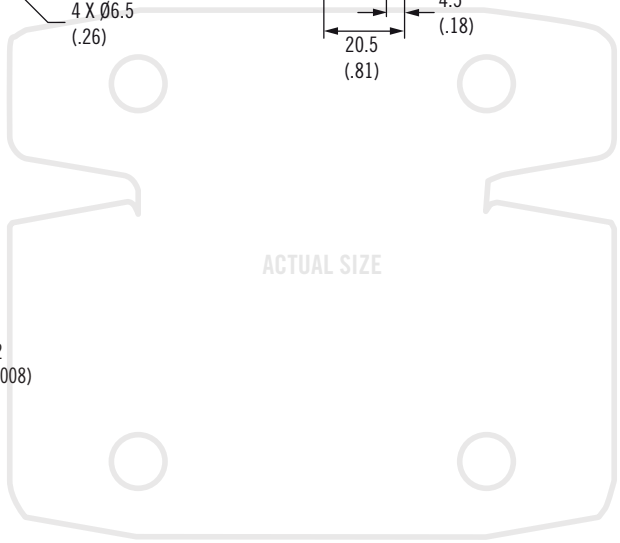

Symmetric

Part Number	Symmetric Torque N·m (in·lbf)
E6-10-620S-50	2.3 (20.0)
E6-10-635S-50	3.9 (35.0)
E6-10-650S-50	5.7 (50.0)
E6-10-665S-50	7.3 (65.0)
E6-10-680S-50	9.0 (80.0)

Asymmetric

Part Number	Forward Torque N·m (in·lbf)	Reverse Torque N·m (in·lbf)
E6-10-620F-50	2.3 (20.0)	1.7 (14.9)
E6-10-635F-50	3.9 (35.0)	3.0 (26.7)
E6-10-650F-50	5.7 (50.0)	4.0 (35.7)
E6-10-665F-50	7.3 (65.0)	5.4 (47.5)
E6-10-680F-50	9.0 (80.0)	6.7 (59.4)
E6-10-695F-50	10.7 (95.0)	7.8 (68.9)
E6-10-6110F-50	12.4 (110.0)	9.0 (79.8)
E6-10-620R-50	1.7 (14.9)	2.3 (20.0)
E6-10-635R-50	3.0 (26.7)	3.9 (35.0)
E6-10-650R-50	4.0 (35.7)	5.7 (50.0)
E6-10-665R-50	5.4 (47.5)	7.3 (65.0)
E6-10-680R-50	6.7 (59.4)	9.0 (80.0)
E6-10-695R-50	7.8 (68.9)	10.7 (95.0)
E6-10-6110R-50	9.0 (79.8)	12.4 (110.0)

Dimensions in millimeters (inch) unless otherwise stated

E6 Hinge

Position Control · Constant Torque · One Way

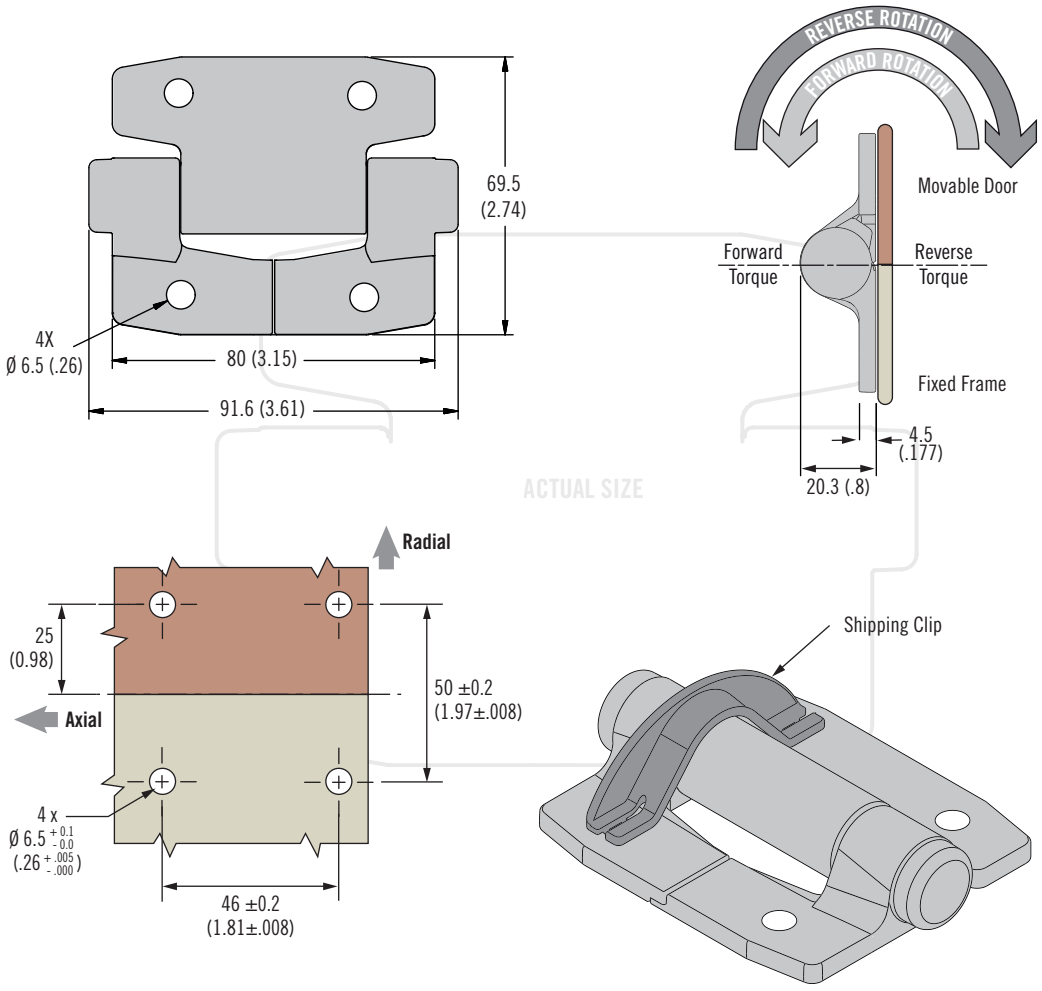

Part Number	Forward Torque N•m (in•lbf)	Reverse Torque N•m (in•lbf)
E6-10-620F0-50	2.3 (20)	Free
E6-10-635F0-50	3.9 (35)	Free
E6-10-650F0-50	5.7 (50)	Free
E6-10-665F0-50	7.3 (65)	Free
E6-10-680F0-50	9.0 (80)	Free
E6-10-695F0-50	10.7 (95)	Free
E6-10-6110F0-50	12.4 (110)	Free
E6-10-620R0-50	Free	2.3 (20)
E6-10-635R0-50	Free	3.9 (35)
E6-10-650R0-50	Free	5.7 (50)
E6-10-665R0-50	Free	7.3 (65)
E6-10-680R0-50	Free	9.0 (80)
E6-10-695R0-50	Free	10.7 (95)
E6-10-6110R0-50	Free	12.4 (110)

- **Holds in every position**
- **No adjustment required**
- **Long cycle life**
- **Minimal resistance in free direction**

Material and Finish

Aluminum alloy, black powder coated

Performance Details

Cycle performance: 20,000 Cycles, see trade drawing for details
Radial load:
Max. static load: 2000 N (450 lbf)
Average ultimate load:
3000N (675lbf)

Axial load:
Max. static load: 500 N (110 lbf)
Average ultimate load:
6000 N (1300 lbf)

Installation Notes

Do not remove shipping clip until hinge is secured by first pair of screws. Discard or recycle shipping clip when removed.

Part Number

See table

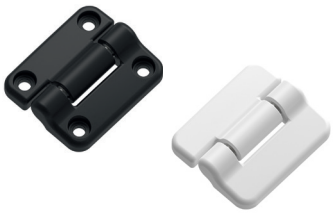

E6 Hinge

Position control · Constant torque · Plastic

- **Holds in every position**
- **No adjustment required**
- **Long cycle life**
- **Corrosion resistant**
- **Multiple mounting options**
- **Concealed mounting hardware**

Material and Finish

40 Series: Nylon, black, stainless steel
50 Series: Nylon, steel, anodized aluminum

Performance Details

Cycle performance
20,000 cycles, see trade drawing for details

Radial load:
Max. static load: 200 N (45 lbf)
Average ultimate load: 1500 N (335 lbf)

Axial load:
Max. static load: 200 N (45 lbf)
Average ultimate load: 2500 N (560 lbf)

Part Number

See table

XX	Color
20	Black
10	White

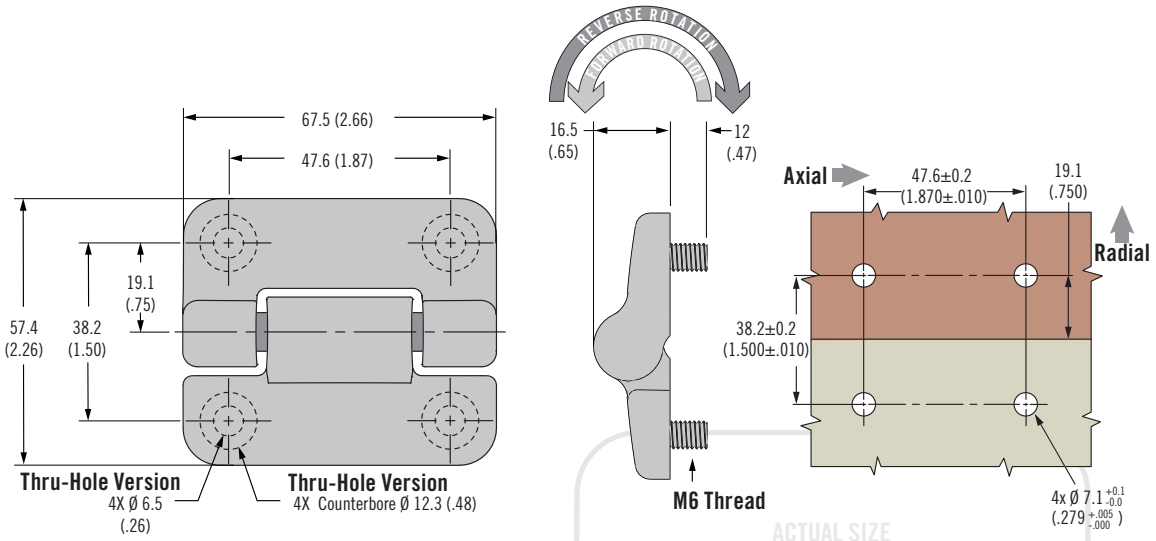

40 Series: Simplified torque mechanism providing a single, standard operating effort

Part Number		
Thru-Hole Mounting	Thread Stud Mounting	Symmetric Torque N•m (in•lbf)
E6-40-537S-20	E6-45-537S-20	4.18 (37)

50 Series: Constant torque mechanism providing customizable, precise operating efforts

Symmetric Torque Versions		
Part Number		Static Torque (forward and reverse) N•m (in•lbf)
Thru-Hole Mounting	Thread Stud Mounting	
E6-50-500-XX	E6-55-500-XX	Free Operating
E6-50-535S-XX	E6-55-535S-XX	3.95 (35)
E6-50-530S-XX	E6-55-530S-XX	3.39 (30)
E6-50-525S-XX	E6-55-525S-XX	2.82 (25)
E6-50-520S-XX	E6-55-520S-XX	2.26 (20)
E6-50-515S-XX	E6-55-515S-XX	1.69 (15)

Asymmetric Torque Versions			
Part Number		Forward Torque N•m (in•lbf)	Reverse Torque N•m (in•lbf)
Thru-Hole Mounting	Thread Stud Mounting		
E6-50-540F-XX	E6-55-540F-XX	4.52 (40)	3.16 (28)
E6-50-535F-XX	E6-55-535F-XX	3.95 (35)	2.77 (24.5)
E6-50-530F-XX	E6-55-530F-XX	3.39 (30)	2.37 (21)
E6-50-525F-XX	E6-55-525F-XX	2.82 (25)	1.98 (17.5)
E6-50-520F-XX	E6-55-520F-XX	2.26 (20)	1.58 (14)
E6-50-515F-XX	E6-55-515F-XX	1.69 (15)	1.19 (10.5)
E6-50-540R-XX	E6-55-540R-XX	3.16 (28)	4.52 (40)
E6-50-535R-XX	E6-55-535R-XX	2.77 (24.5)	3.95 (35)
E6-50-530R-XX	E6-55-530R-XX	2.37 (21)	3.39 (30)
E6-50-525R-XX	E6-55-525R-XX	1.98 (17.5)	2.82 (25)
E6-50-520R-XX	E6-55-520R-XX	1.58 (14)	2.26 (20)
E6-50-515R-XX	E6-55-515R-XX	1.19 (10.5)	1.69 (15)

Dimensions in millimeters (inch) unless otherwise stated

E6 Hinge

Position control · Constant torque · Plastic

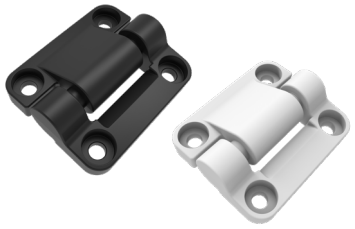

- **Holds in every position**
- **No adjustment required**
- **Long cycle life**
- **Corrosion resistant**

Material and Finish

50 Series: Nylon, steel, anodized aluminum

Performance Details

Cycle performance
20,000 cycles, see trade drawing for details

Part Number

See table

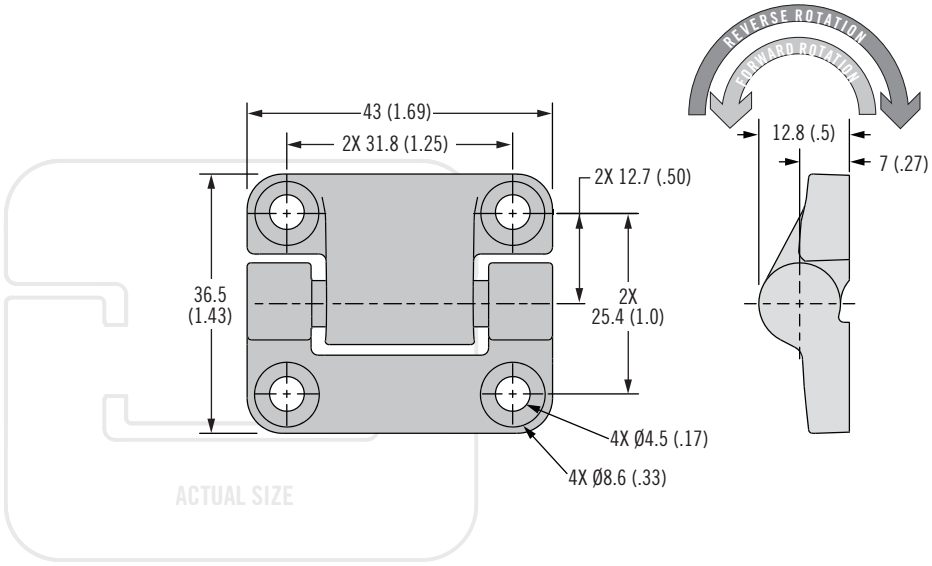

50 Series: Constant torque mechanism providing customizable, precise operating efforts

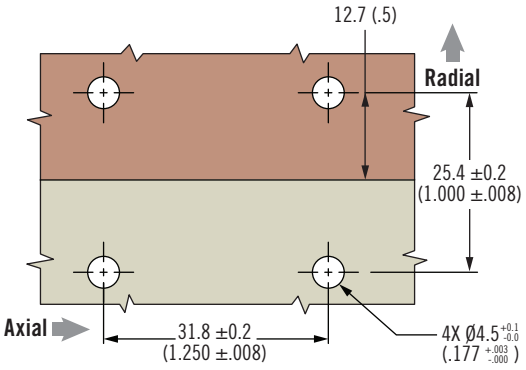

Symmetric Torque Versions	
Part Number Thru-Hole Mounting	Static Torque (forward and reverse) N•m (in•lbf)
E6-50-314S-XX	1.58 (14)
E6-50-310S-XX	1.13 (10)
E6-50-308S-XX	0.90 (8)
E6-50-304S-XX	0.45 (4)

Asymmetric Torque Versions		
Part Number Thru-Hole Mounting	Forward Torque N•m (in•lbf)	Reverse Torque N•m (in•lbf)
E6-50-316F-XX	1.81 (16)	1.27 (11.2)
E6-50-312F-XX	1.36 (12)	0.95 (8.4)
E6-50-308F-XX	0.90 (8)	0.63 (5.6)
E6-50-304F-XX	0.45 (4)	0.32 (2.8)
E6-50-316R-XX	1.27 (11.2)	1.81 (16)
E6-50-312R-XX	0.95 (8.4)	1.36 (12)
E6-50-308R-XX	0.63 (5.6)	0.90 (8)
E6-50-304R-XX	0.32 (2.8)	0.45 (4)

XX	Color
20	Black
10	White

ST-8A Hinge

Position control · Constant torque

- **Holds in every position**
- **No adjustment required**
- **Long cycle life**

Material and Finish

Zinc alloy, black paint

Performance Details

Cycle performance
20,000 cycles within ±20% of static torque specification

Installation Notes

Thread stud install with M3 nuts (not supplied)

Thru hole install with M3 (No. 4) screws (not supplied)

To ensure proper function, assembly must include a minimum of one Type **A** and one Type **B** hinge

Part Number

See table

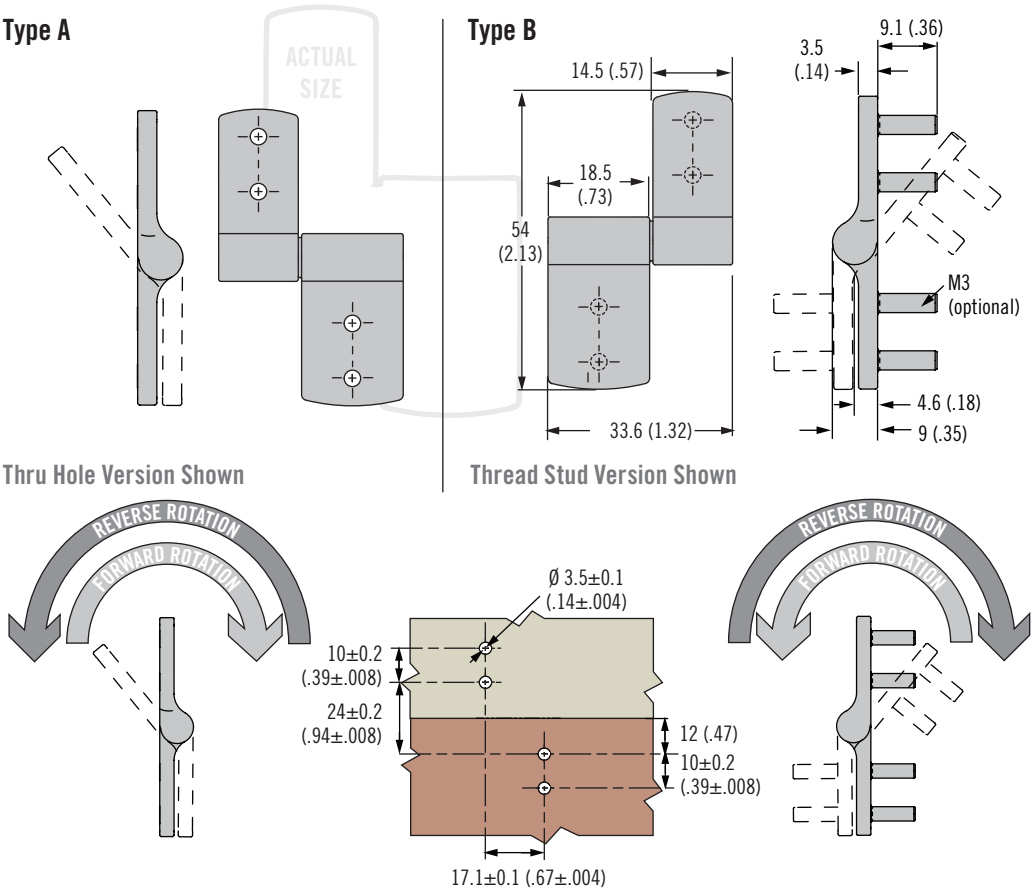

Symmetric Torque Version				
Part Number				Static Torque (forward and reverse) N•m (in•lbf)
M3 Thread Stud		Thru Hole		
Type A	Type B	Type A	Type B	
ST-8A1-40SA-50	ST-8A1-40SB-50	ST-8A-40SA-50	ST-8A-40SB-50	0.45 (4)
ST-8A1-60SA-50	ST-8A1-60SB-50	ST-8A-60SA-50	ST-8A-60SB-50	0.68 (6)
ST-8A1-80SA-50	ST-8A1-80SB-50	ST-8A-80SA-50	ST-8A-80SB-50	0.9 (8)

Asymmetric Torque Version					
Part Number				Forward Torque N•m (in•lbf)	Reverse Torque N•m (in•lbf)
M3 Thread Stud		Thru Hole			
Type A	Type B	Type A	Type B		
ST-8A1-40FA-50	ST-8A1-40FB-50	ST-8A-40FA-50	ST-8A-40FB-50	0.45 (4)	0.27 (2.4)
ST-8A1-60FA-50	ST-8A1-60FB-50	ST-8A-60FA-50	ST-8A-60FB-50	0.68 (6)	0.41 (3.6)
ST-8A1-80FA-50	ST-8A1-80FB-50	ST-8A-80FA-50	ST-8A-80FB-50	0.90 (8)	0.54 (4.8)
ST-8A1-100FA-50	ST-8A1-100FB-50	ST-8A-100FA-50	ST-8A-100FB-50	1.13 (10)	0.68 (6)
ST-8A1-40RA-50	ST-8A1-40RB-50	ST-8A-40RA-50	ST-8A-40RB-50	0.27 (2.4)	0.45 (4)
ST-8A1-60RA-50	ST-8A1-60RB-50	ST-8A-60RA-50	ST-8A-60RB-50	0.41 (3.6)	0.68 (6)
ST-8A1-80RA-50	ST-8A1-80RB-50	ST-8A-80RA-50	ST-8A-80RB-50	0.54 (4.8)	0.9 (8)
ST-8A1-100RA-50	ST-8A1-100RB-50	ST-8A-100RA-50	ST-8A-100RB-50	0.68 (6)	1.13 (10)

Dimensions in millimeters (inch) unless otherwise stated

ST-11A Hinge

Position control · Constant torque

Type A

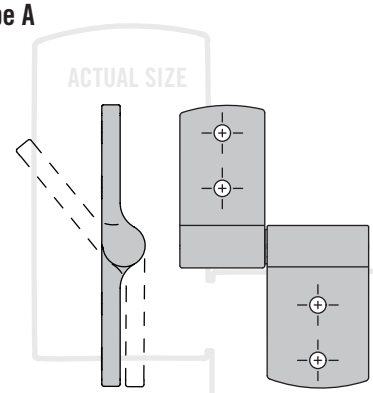

Type B

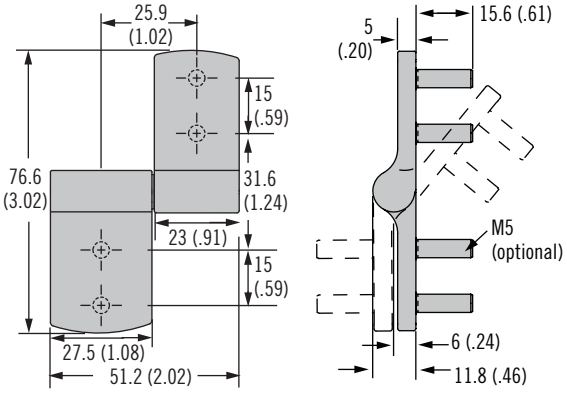

Thru Hole Version Shown

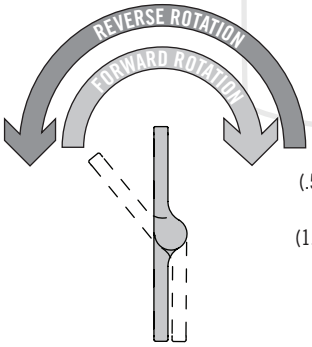

Thread Stud Version Shown

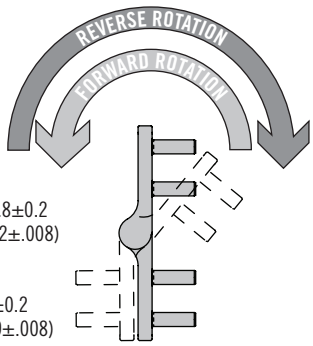

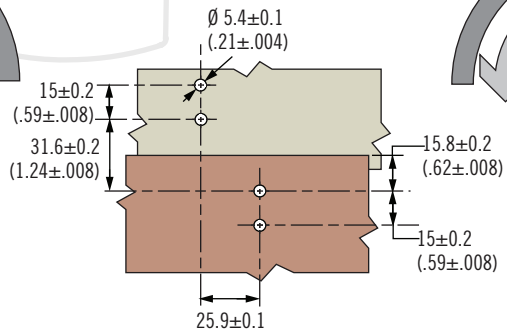

Symmetric Torque Version				
Part Number				Static Torque (forward and reverse) N·m (in·lbf)
M5 Thread Stud		Thru Hole		
Type A	Type B	Type A	Type B	
ST-11A1-140SA-50	ST-11A1-140SB-50	ST-11A-140SA-50	ST-11A-140SB-50	1.58 (14)
ST-11A1-200SA-50	ST-11A1-200SB-50	ST-11A-200SA-50	ST-11A-200SB-50	2.26 (20)
ST-11A1-260SA-50	ST-11A1-260SB-50	ST-11A-260SA-50	ST-11A-260SB-50	2.94 (26)

Asymmetric Torque Version					
Part Number				Forward Torque N·m (in·lbf)	Reverse Torque N·m (in·lbf)
M5 Thread Stud		Thru Hole			
Type A	Type B	Type A	Type B		
ST-11A1-140FA-50	ST-11A1-140FB-50	ST-11A-140FA-50	ST-11A-140FB-50	1.58 (14)	0.95 (8.4)
ST-11A1-200FA-50	ST-11A1-200FB-50	ST-11A-200FA-50	ST-11A-200FB-50	2.26 (20)	1.36 (12)
ST-11A1-260FA-50	ST-11A1-260FB-50	ST-11A-260FA-50	ST-11A-260FB-50	2.94 (26)	1.76 (15.6)
ST-11A1-320FA-50	ST-11A1-320FB-50	ST-11A-320FA-50	ST-11A-320FB-50	3.62 (32)	2.17 (19.2)
ST-11A1-140RA-50	ST-11A1-140RB-50	ST-11A-140RA-50	ST-11A-140RB-50	0.95 (8.4)	1.58 (14)
ST-11A1-200RA-50	ST-11A1-200RB-50	ST-11A-200RA-50	ST-11A-200RB-50	1.36 (12)	2.26 (20)
ST-11A1-260RA-50	ST-11A1-260RB-50	ST-11A-260RA-50	ST-11A-260RB-50	1.76 (15.6)	2.94 (26)
ST-11A1-320RA-50	ST-11A1-320RB-50	ST-11A-320RA-50	ST-11A-320RB-50	2.17 (19.2)	3.62 (32)

- **Holds in every position**
- **No adjustment required**
- **Long cycle life**

Material and Finish

Zinc alloy, black paint

Performance Details

Cycle performance
20,000 cycles within ±20% of static torque specification

Installation Notes

Thread stud install with M5 nuts (not supplied)

Thru hole install with M5 (No. 10) screws (not supplied)

To ensure proper function, assembly must include a minimum of one Type **A** and one Type **B** hinge

Part Number

See table

ST-7A Hinge

Position control · Constant torque

- **Smooth, zero backlash operation**
- **Space efficient design provides high torque in minimum space**
- **Constant torque, never needs adjusting**

Material and Finish

Zinc alloy and steel, natural

Performance Details

Radial load:
Maximum static load: 400 N (90 lbf)

Axial load:
Maximum static load: 300 N (67 lbf)

Cycle performance:
20,000 cycles within ±20% of static torque specification

Installation Notes

1. Install hinge using No. 4 socket head cap screw.
2. For proper function, assembly must include (1) type A and (1) type B hinge.

Part Number

See table

Type A

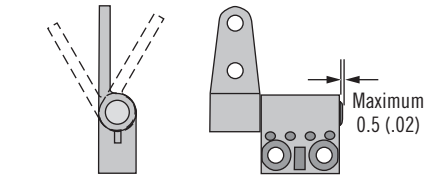

Type B

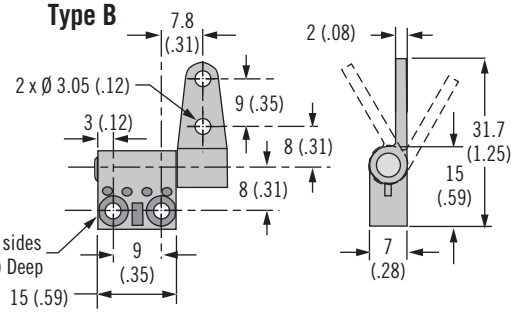

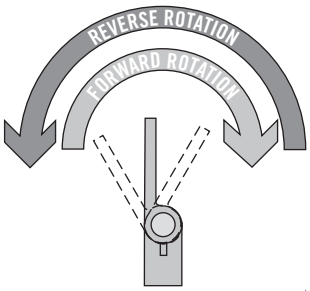

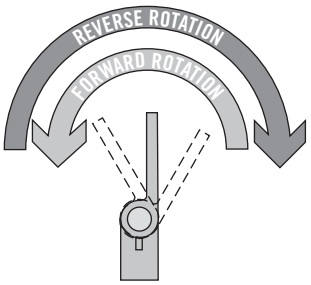

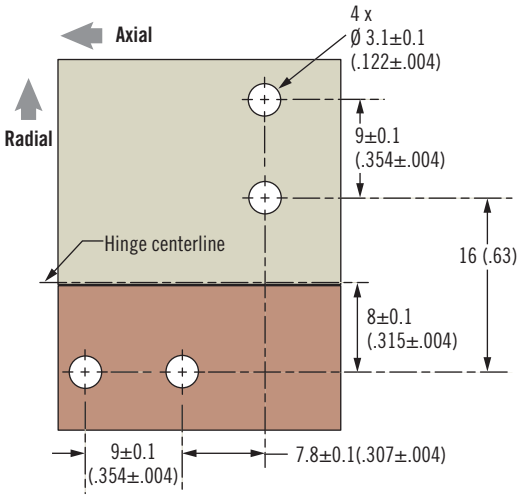

Symmetric Torque Versions		
Part Number		Static Torque (Forward and Reverse) N•m (in•lbf)
Type A	Type B	
ST-7A-30SA-33	ST-7A-30SB-33	0.34 (3)
ST-7A-40SA-33	ST-7A-40SB-33	0.45 (4)
ST-7A-50SA-33	ST-7A-50SB-33	0.56 (5)

Asymmetric Torque Versions			
Part Number		Static Torque N•m (in•lbf)	
Type A	Type B	Forward N•m (in•lbf)	Reverse N•m (in•lbf)
ST-7A-40FA-33	ST-7A-40FB-33	0.45 (4)	0.27 (2.4)
ST-7A-50FA-33	ST-7A-50FB-33	0.56 (5)	0.37 (3)
ST-7A-60FA-33	ST-7A-60FB-33	0.68 (6)	0.41 (3.6)
ST-7A-40RA-33	ST-7A-40RB-33	0.27 (2.4)	0.45 (4)
ST-7A-50RA-33	ST-7A-50RB-33	0.34 (3)	0.56 (5)
ST-7A-60RA-33	ST-7A-60RB-33	0.41 (3.6)	0.68 (6)

Dimensions in millimeters (inch) unless otherwise stated

ST-10A Hinge

Position control · Constant torque

Type A

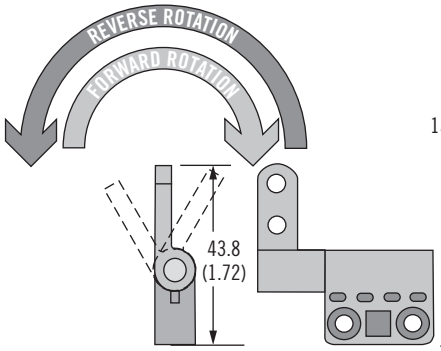

Type B

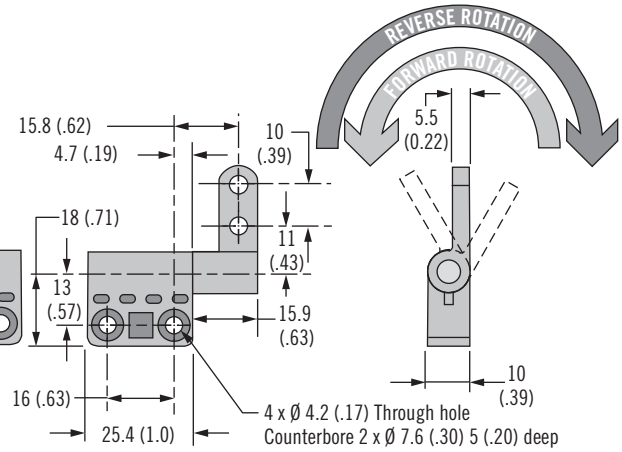

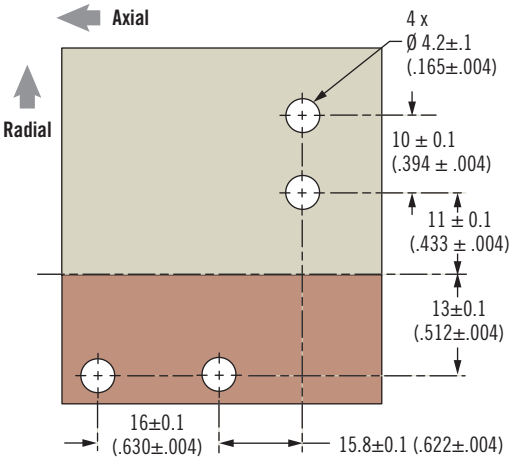

Symmetric Torque Versions		
Part Number		Static Torque (Forward and Reverse) N•m (in•lbf)
Type A	Type B	
ST-10A-80SA-33	ST-10A-80SB-33	0.90 (8)
ST-10A-120SA-33	ST-10A-120SB-33	1.36 (12)
ST-10A-160SA-33	ST-10A-160SB-33	1.81 (16)
ST-10A-200SA-33	ST-10A-200SB-33	2.26 (20)

Asymmetric Torque Versions			
Part Number		Static Torque N•m (in•lbf)	
Type A	Type B	Forward N•m (in•lbf)	Reverse N•m (in•lbf)
ST-10A-120FA-33	ST-10A-120FB-33	1.36 (12)	0.81 (7.2)
ST-10A-160FA-33	ST-10A-160FB-33	1.81 (16)	1.08 (9.6)
ST-10A-200FA-33	ST-10A-200FB-33	2.26 (20)	1.36 (12)
ST-10A-120RA-33	ST-10A-120RB-33	0.81 (7.2)	1.34 (12)
ST-10A-160RA-33	ST-10A-160RB-33	1.08 (9.6)	1.84 (16)
ST-10A-200RA-33	ST-10A-200RB-33	1.36 (12)	2.26 (20)

- **Smooth, zero backlash operation**
- **Space efficient design provides high torque in minimum space**
- **Constant torque, never needs adjusting**

Material and Finish

Zinc alloy and steel, natural

Performance Details

Radial load:
Maximum static load:
500 N (112 lbf)

Axial load:
Maximum static load:
1000 N (225 lbf)

Cycle performance:
20,000 cycles within ±20% of static torque specification

Installation Notes

1. Install hinge using M4 (No.8) socket head cap screw.
2. For proper function, assembly must include(1) type A and (1) type B hinge.

Part Number

See table

ST-10E Hinge

Position control · Constant torque

- **Smooth, zero backlash operation**
- **Space efficient design provides high torque in minimum space**
- **Constant torque, never needs adjusting**

Material and Finish

Zinc alloy and steel, natural

Performance Details

Cycle performance:
20,000 cycles within ±20% of static torque specification

Installation Notes

1. Install hinge using M4 (No.8) socket head cap screw.
2. For proper function, assembly must include(1) type A and (1) type B hinge.

Part Number

See table

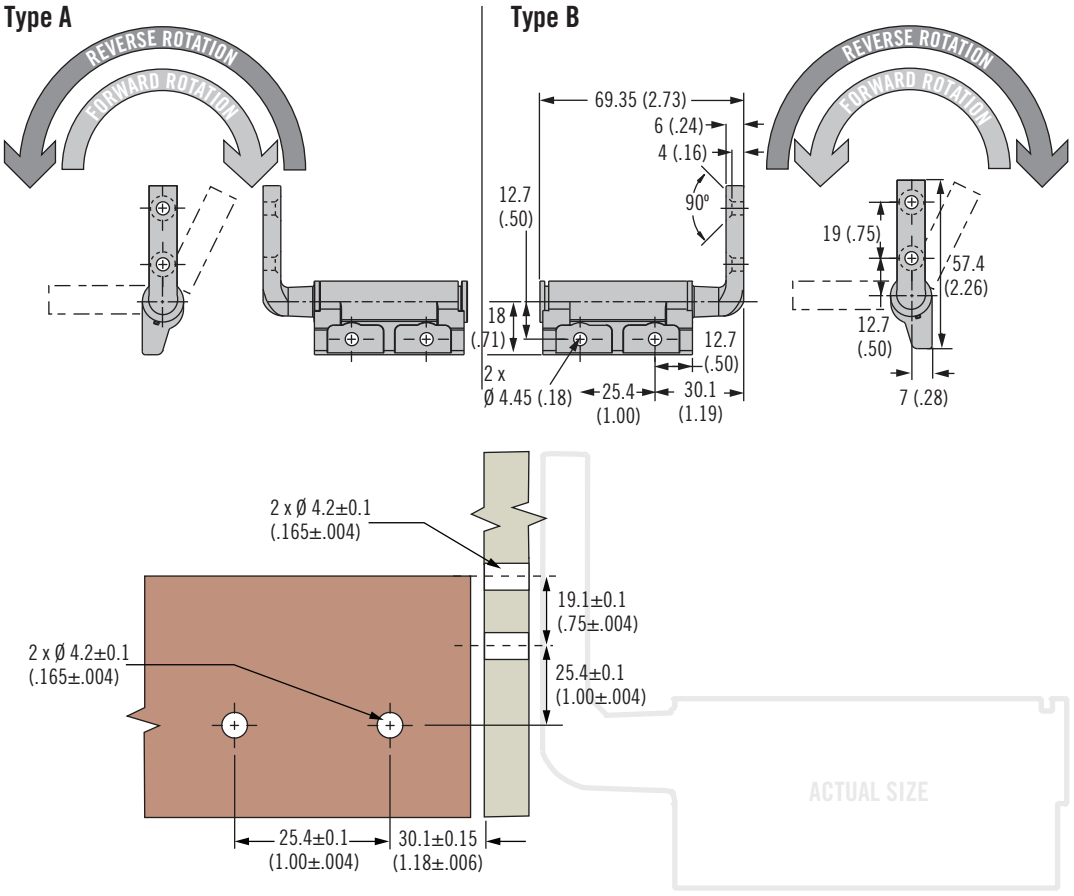

Symmetric Torque Versions		
Part Number		Static Torque (Forward and Reverse) N·m (in·lbf)
Type A	Type B	
ST-10E-120SE-33	ST-10E-120SG-33	1.35 (12)
ST-10E-200SE-33	ST-10E-200SG-33	2.26 (20)
ST-10E-280SE-33	ST-10E-280SG-33	3.16 (28)
ST-10E-360SE-33	ST-10E-360SG-33	4.06 (36)

Asymmetric Torque Versions			
Part Number		Static Torque N·m (in·lbf)	
Type A	Type B	Forward N·m (in·lbf)	Reverse N·m (in·lbf)
ST-10E-200FE-33	ST-10E-200FG-33	2.26 (20)	1.35 (12)
ST-10E-280FE-33	ST-10E-280FG-33	3.16 (28)	2.26 (20)
ST-10E-360FE-33	ST-10E-360FG-33	4.06 (36)	2.44 (21.6)
ST-10E-440FE-33	ST-10E-440FG-33	4.97 (44)	2.93 (26)
ST-10E-200RE-33	ST-10E-200RG-33	1.35 (12)	2.26 (20)
ST-10E-280RE-33	ST-10E-280RG-33	2.26 (20)	3.16 (28)
ST-10E-360RE-33	ST-10E-360RG-33	2.44 (21.6)	4.06 (36)
ST-10E-440RE-33	ST-10E-440RG-33	2.93 (26)	4.97 (44)

Dimensions in millimeters (inch) unless otherwise stated

ST-10E Hinge

Position control · Constant torque

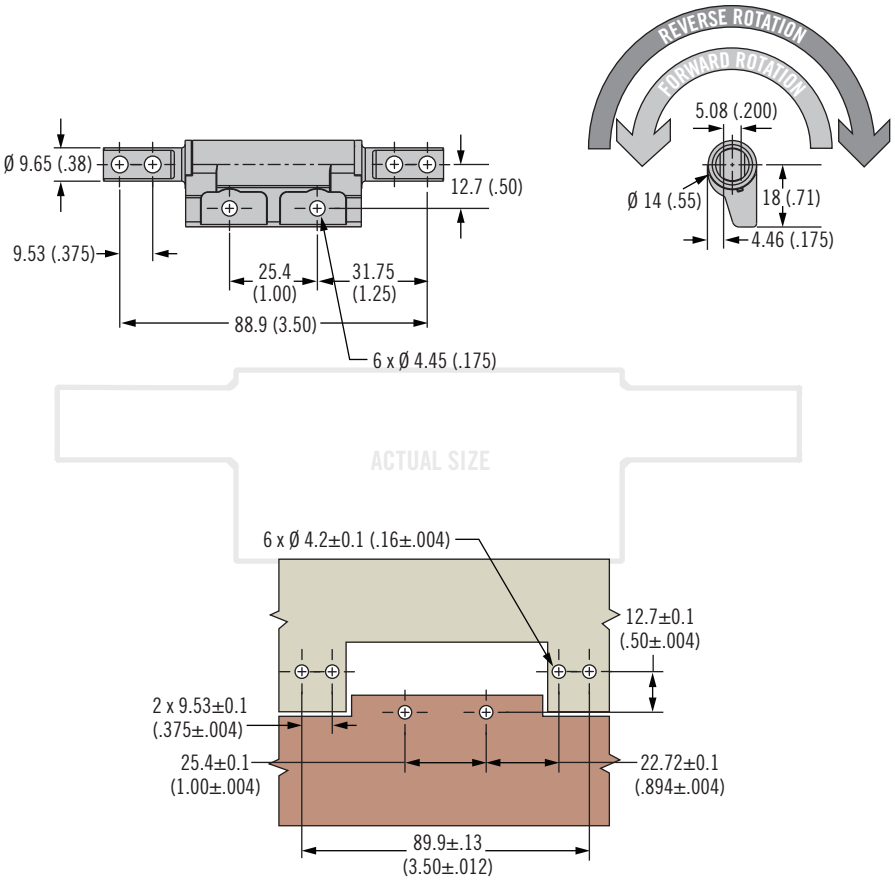

- **Smooth, zero backlash operation**
- **Space efficient design provides high torque in minimum space**
- **Constant torque, never needs adjusting**

Material and Finish

Zinc alloy and steel, natural

Performance Details

Cycle performance:
20,000 cycles within ±20% of static torque specification

Installation Notes

Install hinge using M4 (No.8) socket head cap screw

Symmetric Torque Versions	
Part Number	**Static Torque (Forward and Reverse) N·m (in·lbf)**
ST-10E-120SH-33	1.35 (12)
ST-10E-200SH-33	2.26 (20)
ST-10E-280SH-33	3.16 (28)
ST-10E-360SH-33	4.06 (36)

Asymmetric Torque Versions		
Part Number	**Static Torque N·m (in·lbf)**	
	Forward N·m (in·lbf)	**Reverse N·m (in·lbf)**
ST-10E-200FH-33	2.26 (20)	1.35 (12)
ST-10E-280FH-33	3.16 (28)	1.89 (16.8)
ST-10E-360FH-33	4.06 (36)	2.44 (21.6)
ST-10E-440FH-33	4.97 (44)	2.93 (26)
ST-10E-200RH-33	1.35 (12)	2.26 (20)
ST-10E-280RH-33	1.89 (16.8)	3.16 (28)
ST-10E-360RH-33	2.44 (21.6)	4.06 (36)
ST-10E-440RH-33	2.93 (26)	4.97 (44)

Part Number

See table

ST-10E Hinge

Position control · Constant torque

- **Smooth, zero backlash operation**
- **Space efficient design provides high torque in minimum space**
- **Constant torque, never needs adjusting**

Material and Finish

Zinc alloy and steel, natural

Performance Details

Cycle performance:
20,000 cycles within ±20% of static torque specification

Installation Notes

1. Install hinge using M4 (No. 8 socket head cap screw.
2. For proper function, assembly must include (1) type A and (1) type B hinge.

Part Number

See table

Type A **Type B**

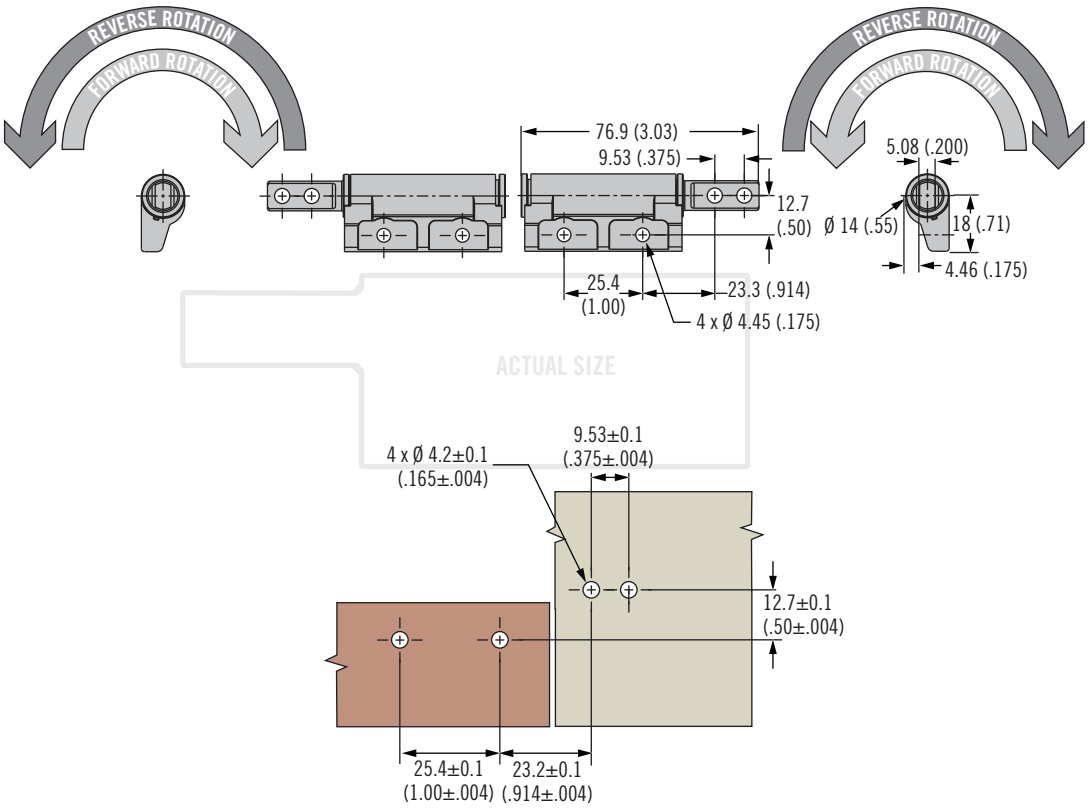

Symmetric Torque Versions		
Part Number		Static Torque (Forward and Reverse) N•m (in•lbf)
Type A	Type B	
ST-10E-120SJ-33	ST-10E-120SK-33	1.35 (12)
ST-10E-200SJ-33	ST-10E-200SK-33	2.26 (20)
ST-10E-280SJ-33	ST-10E-280SK-33	3.16 (28)
ST-10E-360SJ-33	ST-10E-360SK-33	4.06 (36)

Asymmetric Torque Versions			
Part Number		Static Torque N•m (in•lbf)	
Type A	Type B	Forward N•m (in•lbf)	Reverse N•m (in•lbf)
ST-10E-200FJ-33	ST-10E-200FK-33	2.26 (20)	1.35 (12)
ST-10E-280FJ-33	ST-10E-280FK-33	3.16 (28)	1.89 (16.8)
ST-10E-360FJ-33	ST-10E-360FK-33	4.06 (36)	2.44 (21.6)
ST-10E-440FJ-33	ST-10E-440FK-33	4.97 (44)	2.93 (26)
ST-10E-200RJ-33	ST-10E-200RK-33	1.35 (12)	2.26 (20)
ST-10E-280RJ-33	ST-10E-280RK-33	1.89 (16.8)	3.16 (28)
ST-10E-360RJ-33	ST-10E-360RK-33	2.44 (21.6)	4.06 (36)
ST-10E-440RJ-33	ST-10E-440RK-33	2.93 (26)	4.97 (44)

Dimensions in millimeters (inch) unless otherwise stated

ST-12A Hinge

Position control · Constant torque

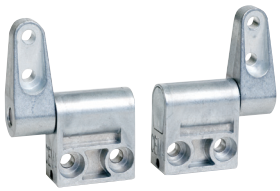

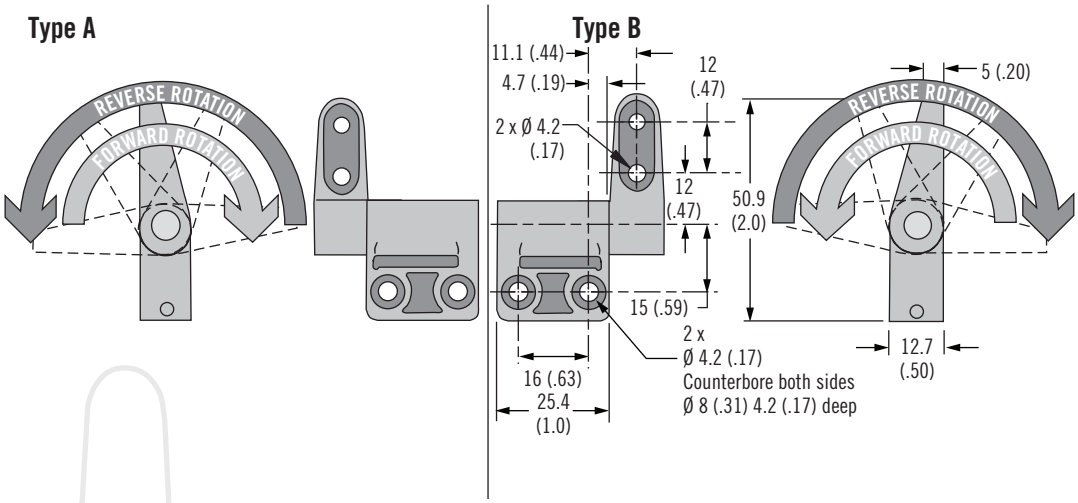

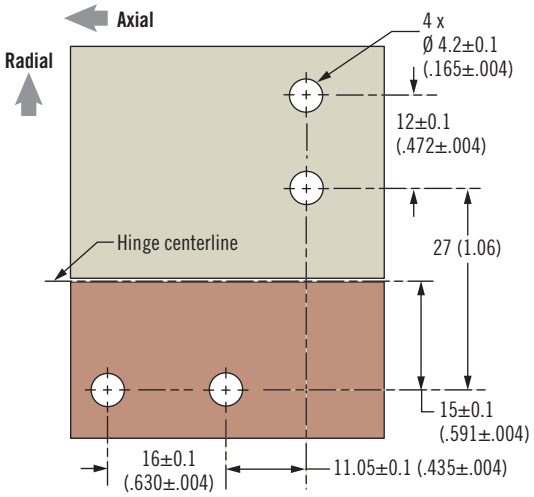

Symmetric Torque Versions		
Part Number		Static Torque (Forward and Reverse) N·m (in·lbf)
Type A	Type B	
ST-12A-120SA-33	ST-12A-120SB-33	1.4 (12)
ST-12A-200SA-33	ST-12A-200SB-33	2.3 (20)
ST-12A-280SA-33	ST-12A-280SB-33	3.2 (28)
ST-12A-360SA-33	ST-12A-360SB-33	4.1 (36)

Asymmetric Torque Versions			
Part Number		Static Torque N·m (in·lbf)	
Type A	Type B	Forward N·m (in·lbf)	Reverse N·m (in·lbf)
ST-12A-200FA-33	ST-12A-200FB-33	2.3 (20)	1.5 (13.6)
ST-12A-280FA-33	ST-12A-280FB-33	3.2 (28)	2.2 (19.1)
ST-12A-360FA-33	ST-12A-360FB-33	4.1 (36)	2.8 (24.6)
ST-12A-440FA-33	ST-12A-440FB-33	5 (44)	3.4 (30)
ST-12A-200RA-33	ST-12A-200RB-33	1.5 (13.6)	2.3 (20)
ST-12A-280RA-33	ST-12A-280RB-33	2.2 (19.1)	3.2 (28)
ST-12A-360RA-33	ST-12A-360RB-33	2.8 (24.6)	4.1 (36)
ST-12A-440RA-33	ST-12A-440RB-33	3.4 (30)	5 (44)

- **Smooth, zero backlash operation**
- **Space efficient design provides high torque in minimum space**
- **Constant torque, never needs adjusting**

Material and Finish

Zinc alloy and steel, natural

Performance Details

Radial load:
Maximum static load:
1000 N (225 lbf)

Axial load:
Maximum static load:
1200 N (270 lbf)

Cycle performance:
20,000 cycles within ±20% of static torque specification

Installation Notes

1. Install hinge using M4 (No. 8) socket head cap screw.
2. For proper function, assembly must include (1) type A and (1) type B hinge.

Part Number

See table

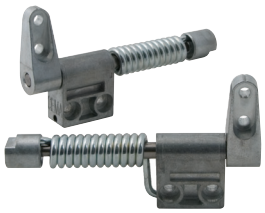

ST-12C Hinge

Position control · Constant torque · Counterbalanced

- **Counterbalance spring allows easy opening**
- **Space efficient design provides high torque in minimum space**
- **Constant torque, never needs adjusting**

Material and Finish

Zinc alloy and steel, natural

Performance Details

Radial load:
Maximum static load:
1000 N (225 lbf)

Axial load:
Maximum static load:
1200 N (270 lbf)

Cycle performance:
20,000 cycles within ±20% of static torque specification

Installation Notes

1. Install hinge using M4 (No. 8) socket head cap screw.
2. For proper function, assembly must include (1) type A and (1) type B hinge.
3. Application must limit rotation ±90° from shipping position.

Application

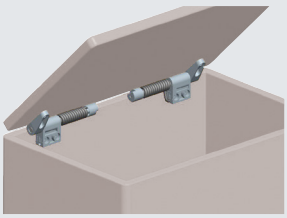

Part Number

See table

Type A

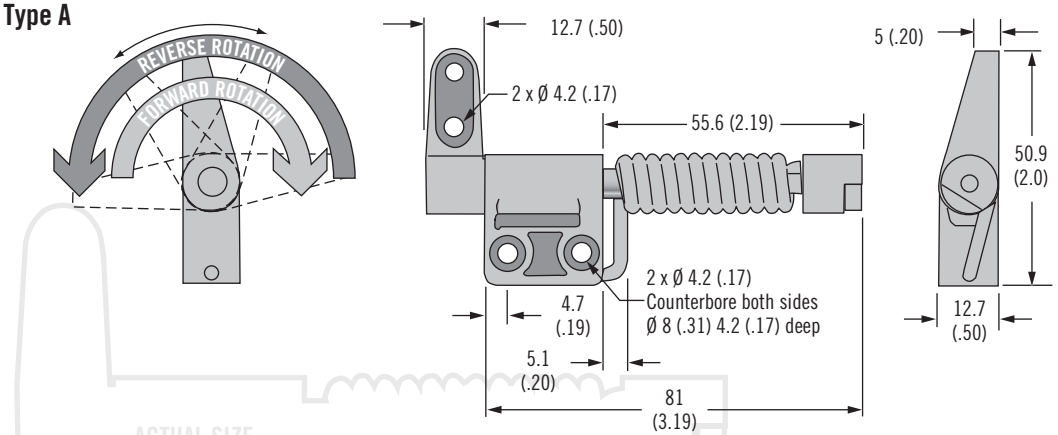

Type B

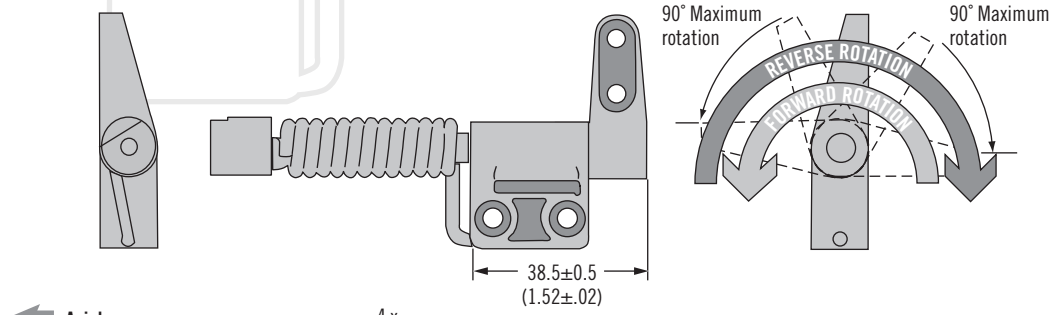

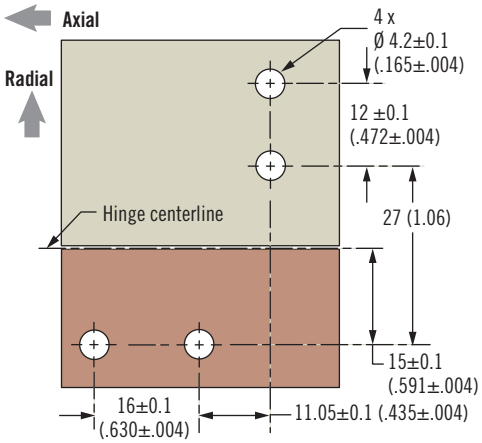

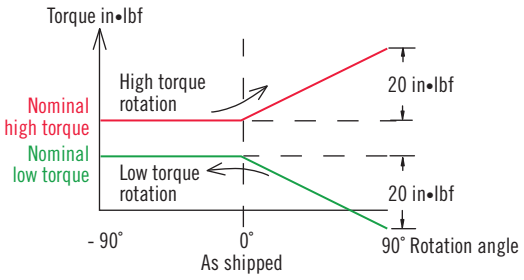

Part Number		Static Torque N•m (in•lbf)	
Type A	Type B	Forward N•m (in•lbf)	Reverse N•m (in•lbf)
ST-12C-200FA1-33	ST-12C-200FB1-33	2.3 (20)	1.5 (13.6)
ST-12C-280FA1-33	ST-12C-280FB1-33	3.2 (28)	2.2 (19.1)
ST-12C-360FA1-33	ST-12C-360FB1-33	4.1 (36)	2.8 (24.6)
ST-12C-440FA1-33	ST-12C-440FB1-33	5 (44)	3.4 (30)
ST-12C-200RA1-33	ST-12C-200RB1-33	1.5 (13.6)	2.3 (20)
ST-12C-280RA1-33	ST-12C-280RB1-33	2.2 (19.1)	3.2 (28)
ST-12C-360RA1-33	ST-12C-360RB1-33	2.8 (24.6)	4.1 (36)
ST-12C-440RA1-33	ST-12C-440RB1-33	3.4 (30)	5 (44)

Dimensions in millimeters (inch) unless otherwise stated

CA Hinge

Position control · Constant torque · Counterbalanced

- **Holds in every position**
- **Counterbalance spring allows easy opening**
- **Long cycle life**

Closed Position

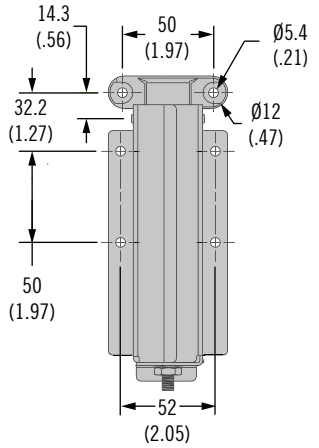

Open Position

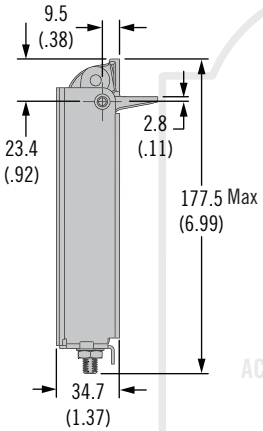

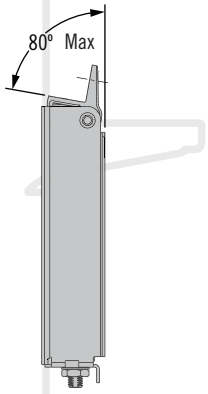

ACTUAL SIZE

Panel Preparation

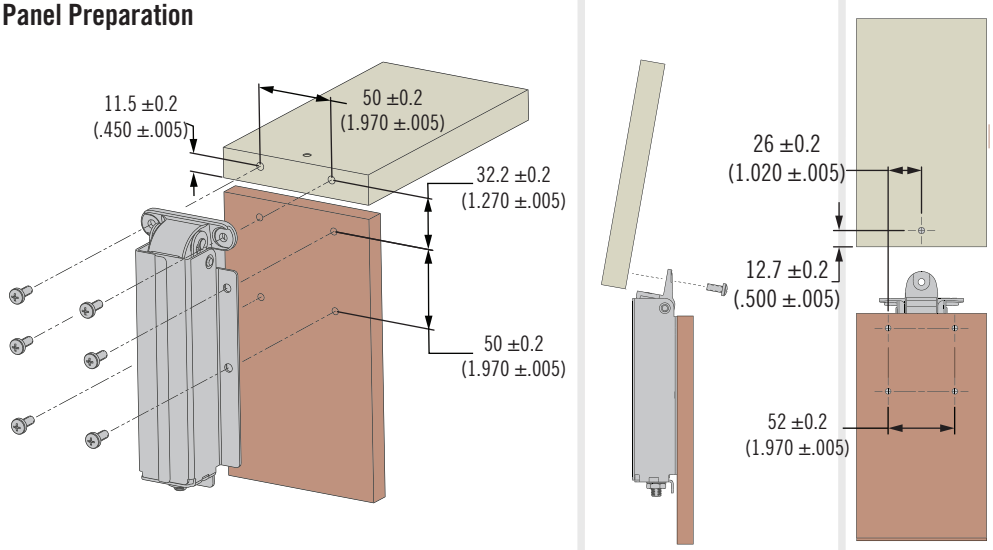

CA-50 Hinge Model Selection Guide - See Fig.1

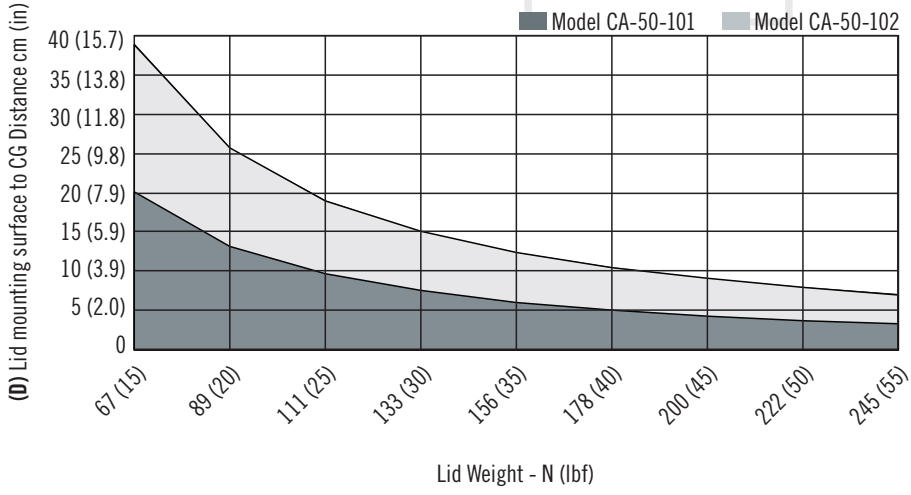

Material and Finish

Steel, black powder coated

Performance Details

Cycle performance: 20,000 cycles
See trade drawing for details.

Installation Notes

See trade drawing for instructions on setting spring preload.

Installation with M5 or No. 10 screws (not supplied).

Application

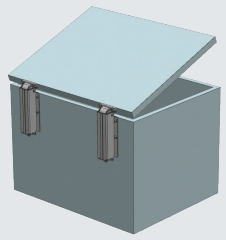

Part Number

See table

Part Number	Max Lift Assistance Per Hinge N·m (in·lbf)
CA-50-101-50	9.4 (83)
CA-50-102-50	17.7 (157)

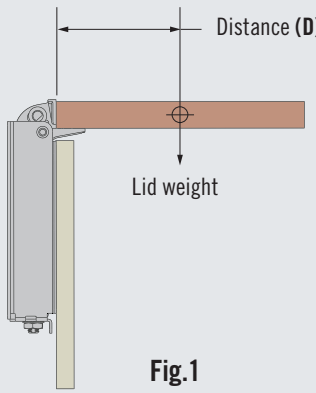

Fig.1

CB Lift-A-Syst® Hinge

Counterbalanced · Position Control

- **Counterbalance technology allows for easy opening / closing of heavy panels**
- **Accommodates a wide variety of panel weights**
- **Adjustability feature allows fine tuning of panel motion**
- **Long cycle life**

Material and Finish

Aluminum, black anodized

Installation Notes

See Trade Drawings for more information.

Application

Part Number

See table

Open Position (Left Hinge Shown)

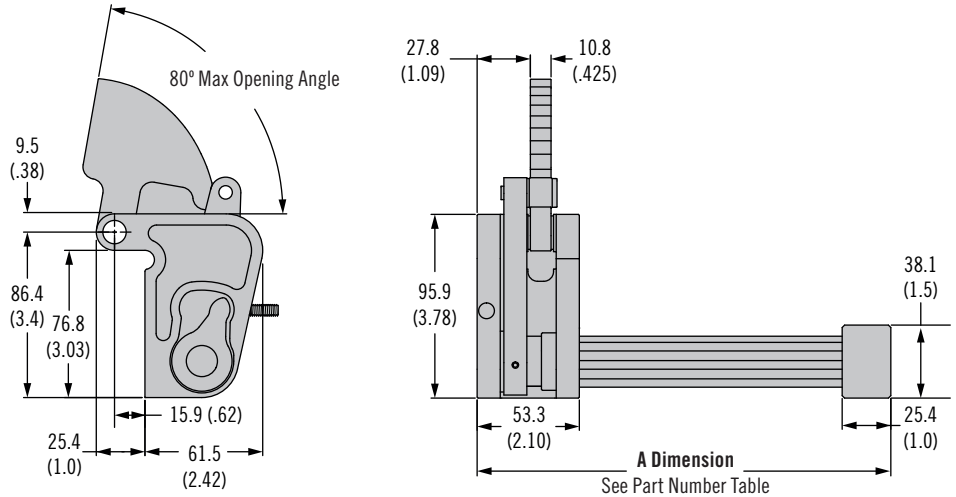

Closed Position (Left Hinge Shown)

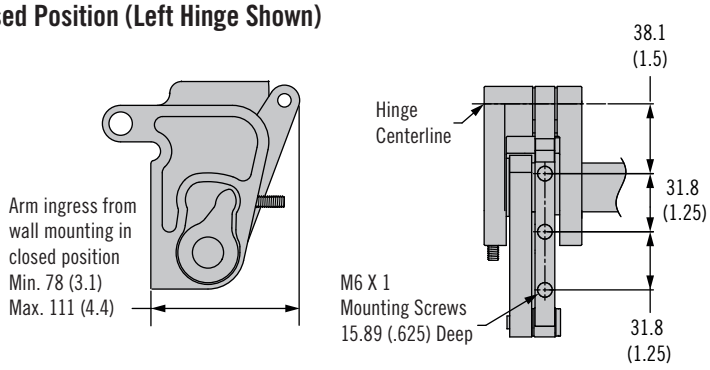

Panel Preparation (Left Hinge Shown)

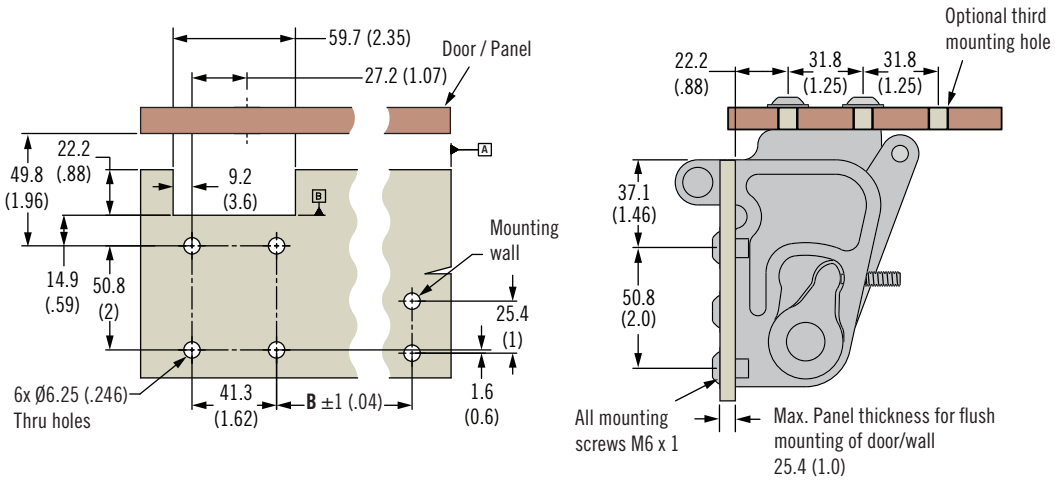

Note: Wall panel prep shown for left-hand assembly. All geometry mirrored about "A" datum for right-hand units

Dimensions in millimeters (inch) unless otherwise stated

CB Lift-A-Syst® Hinge

Counterbalanced · Position Control

Counterbalance Hinge Selection Guide (per hinge)

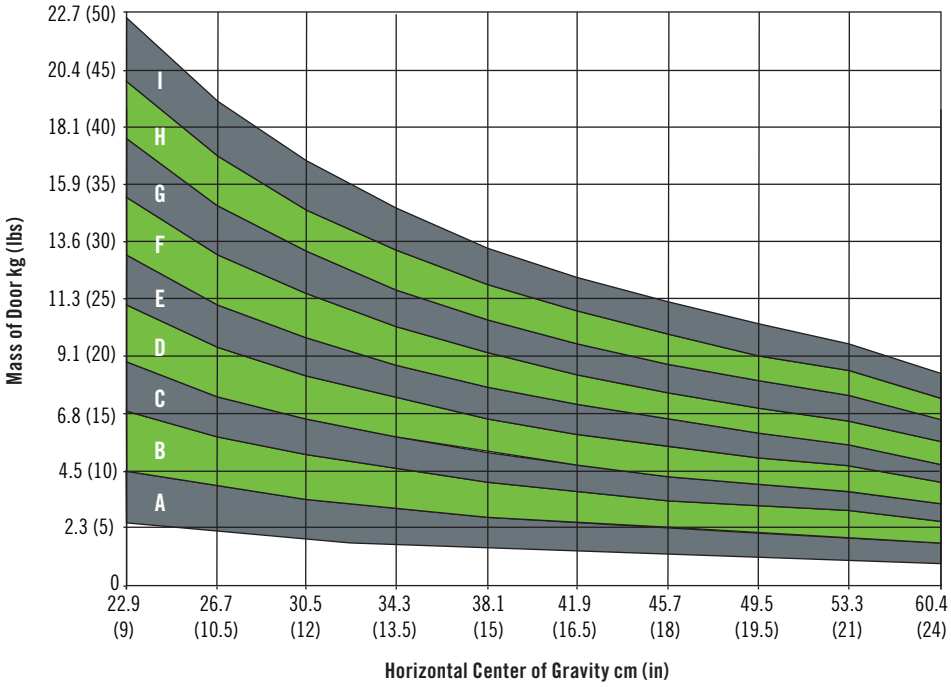

Panel Balance Characteristics (typical)

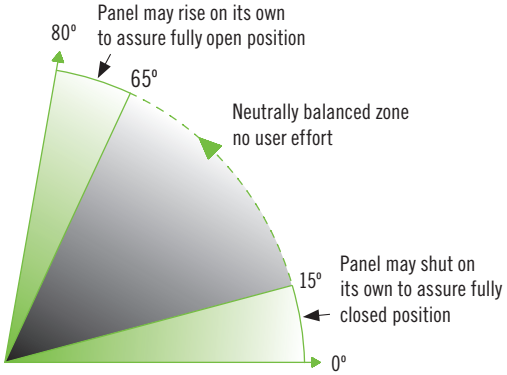

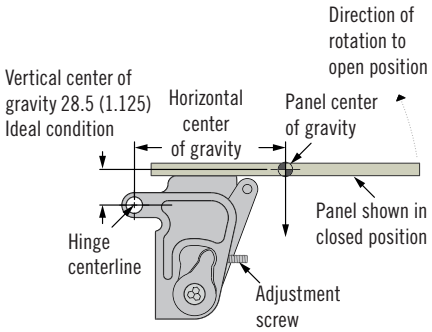

Accessories

Support Hinge:
Part number: CB-10-100-10

Notes

Support Hinge can be used when one counterbalanced hinge can supply required torque for the panel. See illustration below and trade drawing J-CB-1 for detailed information.

Part Number		Graph Selection Zone	A Dimension cm (in)	B Dimension cm (in)	Torque N•m (lbf-in) (per hinge)		
Left	Right				Nominal	Minimum	Maximum
CB-11-101-00-10	CB-12-101-00-10	A	21.6 (8.5)	15.59 (6.14)	8.8 (78)	5.7 (50)	10.2 (90)
CB-11-102-00-10	CB-12-102-00-10	B	28.6 (11.13)	22.25 (8.76)	13.5 (119)	10.2 (90)	15.5 (137)
CB-11-103-00-10	CB-12-103-00-10	C	34.3 (13.50)	28.29 (11.13)	18.2 (161)	15.5 (137)	19.8 (175)
CB-11-104-00-10	CB-12-104-00-10	D	40.0 (15.75)	34.00 (13.39)	22.8 (202)	19.8 (175)	24.9 (220)
CB-21-101-00-10	CB-22-101-00-10	E	29.2 (11.50)	22.07 (8.68)	27.7 (245)	24.9 (220)	29.4 (260)
CB-21-102-00-10	CB-22-102-00-10	F	30.9 (12.17)	24.93 (9.80)	32.2 (285)	29.4 (260)	34.5 (305)
CB-21-103-00-10	CB-22-103-00-10	G	34.1 (13.42)	28.10 (11.05)	37.3 (330)	34.5 (305)	39.5 (350)
CB-21-104-00-10	CB-22-104-00-10	H	37 (14.54)	30.96 (12.18)	42.4 (375)	39.5 (350)	44.6 (395)
CB-21-105-00-10	CB-22-105-00-10	I	40.8 (16.04)	34.77 (13.68)	47.5 (420)	44.6 (395)	50.3 (445)

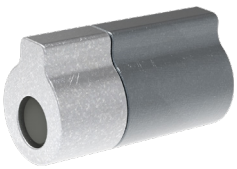

ST-4A , ST-5A, ST-10P Hinge

Position control · Constant torque

- **Smooth consistent operation**
- **Compact design fits the smallest applications**
- **Never requires adjustment**

Material and Finish

Aluminum, zinc alloy and steel, natural

Performance Details

Cycle performance:
20,000 cycles, see trade drawing at southco.com for details

ST-4A
Radial load:
Maximum static load:
200 N (45 lbf)

ST-5A
Radial load:
Maximum static load:
223 N (50 lbf)

ST-10P
Radial load:
Maximum static load:
400N

Part Number

See table

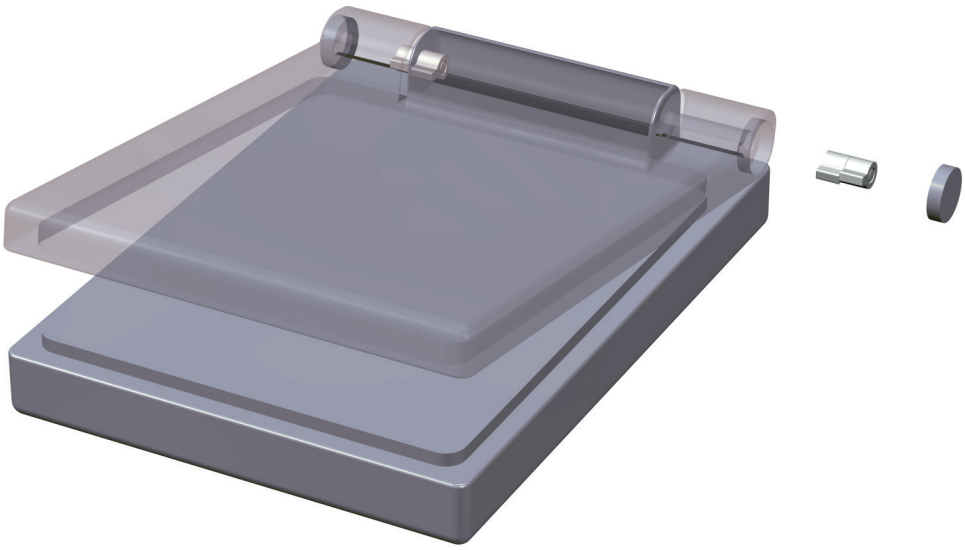

Part Number	Static Torque		X	Y
	Forward N•m (in•lbf)	Reverse N•m (in•lbf)		
ST-4A-3S-33	0.03 (0.3)		3.5 (.14)	3.5 (.14)
ST-4A-8S-33	0.08 (0.75)		9.5 (.37)	9.5 (.37)
ST-5A-10S-33	0.11 (1.0)		4.15 (.163)	7.4 (.291)
ST-5A-16S-33	0.18 (1.6)			
ST-5A-23S-33	0.26 (2.3)			
ST-5A-30S-33	0.34 (3.0)			
ST-10P-040S-33	0.45 (4)		9 (.35)	20.5 (.81)
ST-10P-080S-33	0.9 (8)			
ST-10P-100S-33	1.13 (10)			
ST-10P-140S-33	1.58 (14)			
ST-10P-040R-33	0.32 (2.8)	0.45 (4)		
ST-10P-080R-33	0.63 (5.6)	0.9 (8)		
ST-10P-120R-33	0.95 (8.4)	1.36 (12)		
ST-10P-160R-33	1.27 (11.2)	1.81 (16)		
ST-10P-040F-33	0.45 (4)	0.32 (2.8)		
ST-10P-080F-33	0.9 (8)	0.63 (5.6)		
ST-10P-120F-33	1.36 (12)	0.95 (8.4)		
ST-10P-160F-33	1.81 (16)	1.27 (11.2)		

Dimensions in millimeters (inch) unless otherwise stated

ST-4A, ST-5A, ST-10P Hinge

Position control · Constant torque

- Smooth consistent operation
- Compact design fits the smallest applications
- Never requires adjustment

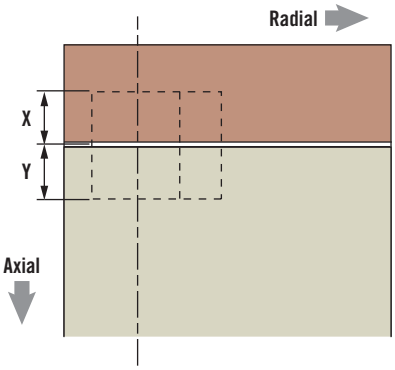

ST-4A

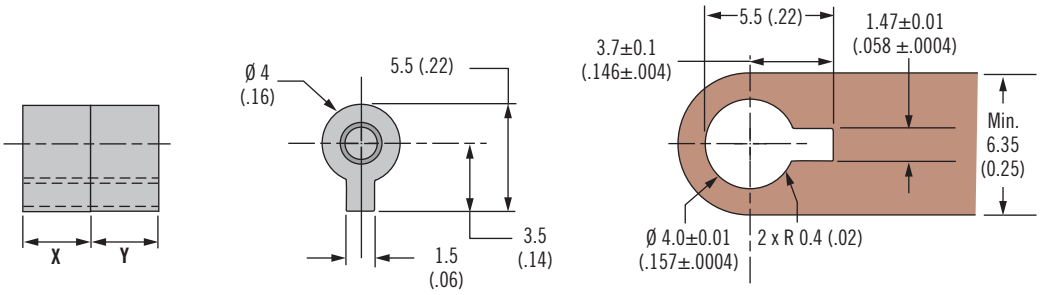

ST-5A

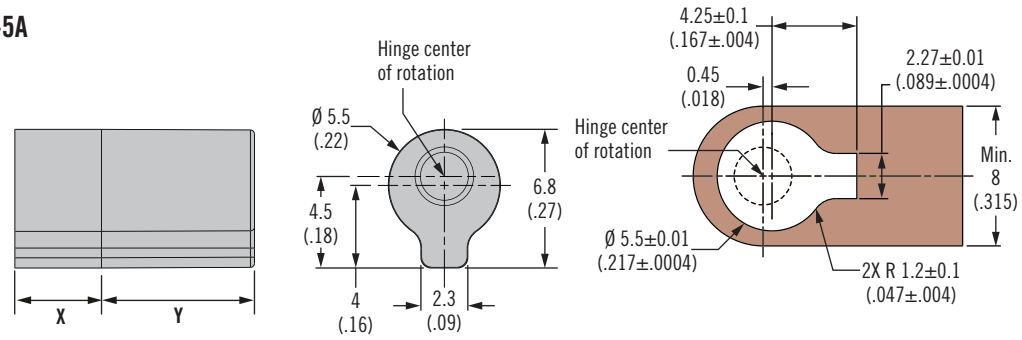

ST-10P

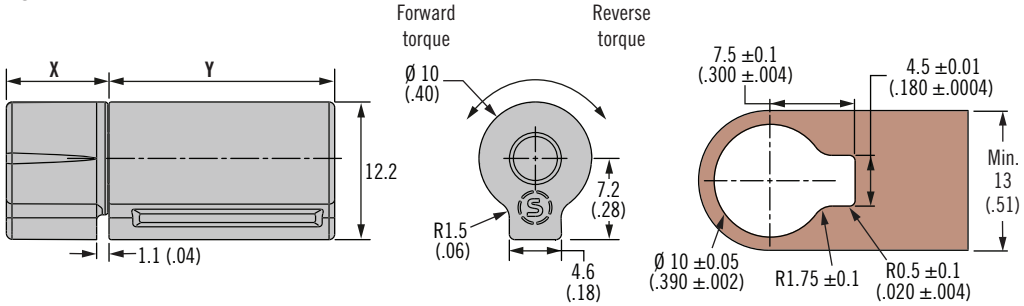

Part Number

See table

ST-8P Hinge

Position control · Constant torque

- **Designed for overmolding**
- **Brings constant torque performance to a wide range of applications**
- **Space efficient design provides high torque in minimum space**
- **Never requires adjustment**

Material and Finish

Aluminum, plastic and hardened steel

Performance Details

Cycle performance:
20,000 cycles within ± 20% of static torque specification

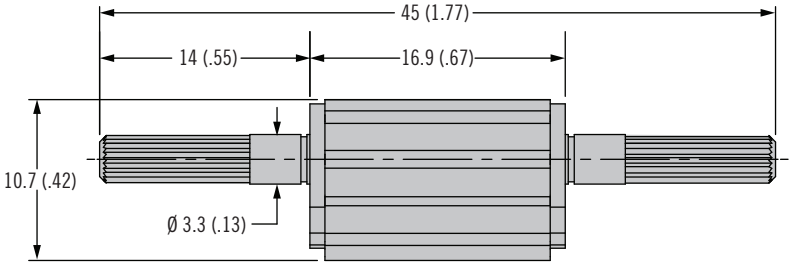

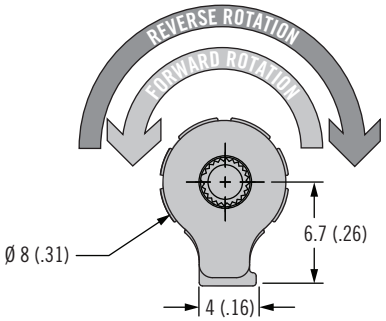

ACTUAL SIZE

Part Number

See table

Symmetric Torque Versions	
Part Number	**Static Torque (Forward and Reverse) N•m (in•lbf)**
ST-8P-40SA-50	0.45 (4)
ST-8P-60SA-50	0.68 (6)
ST-8P-80SA-50	0.9 (8)

Asymmetric Torque Versions		
Part Number	**Static Torque N•m (in•lbf)**	
	Forward N•m (in•lbf)	**Reverse N•m (in•lbf)**
ST-8P-40FA-50	0.45 (4.0)	0.27 (2.4)
ST-8P-60FA-50	0.68 (6.0)	0.41 (3.6)
ST-8P-80FA-50	0.90 (8.0)	0.54 (4.8)
ST-8P-100FA-50	1.13 (10.0)	0.68 (6)
ST-8P-40RA-50	0.27 (2.4)	0.45 (4)
ST-8P-60RA-50	0.41 (3.6)	0.68 (6)
ST-8P-80RA-50	0.54 (4.8)	0.9 (8)
ST-8P-100RA-50	0.68 (6.0)	1.13 (10)

Dimensions in millimeters (inch) unless otherwise stated

ST-11P2 Hinge

Position control · Constant torque

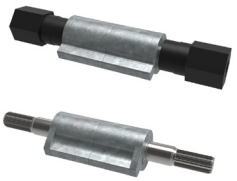

HEX SHAFT STYLE

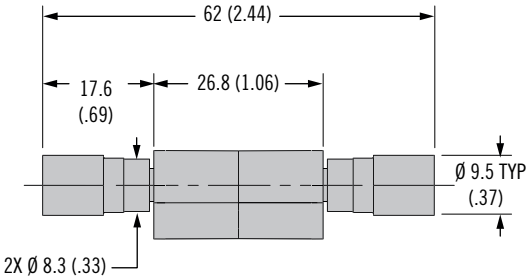

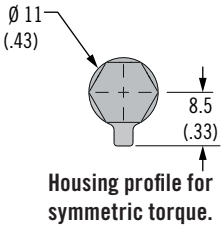

Housing profile for symmetric torque.

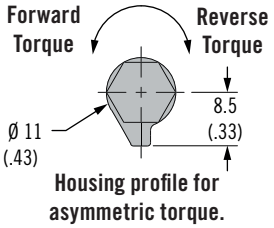

Housing profile for asymmetric torque.

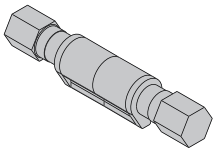

ACTUAL SIZE

KNURLED SHAFT STYLE

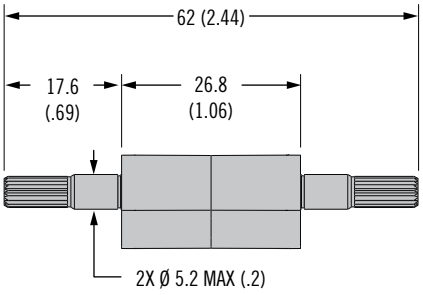

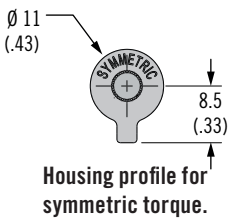

Housing profile for symmetric torque.

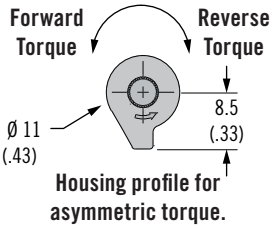

Housing profile for asymmetric torque.

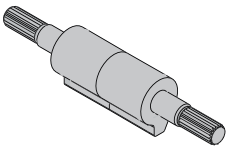

Symmetric Torque Versions		
Part Number	**Shaft Style**	**Static Torque N•m (in•lbf)**
ST-11P2-350SA-33	HEX	3.95 (35)
ST-11P2-300SA-33	KNURL	3.39 (30)
ST-11P2-250SA-33	KNURL	2.82 (25)
ST-11P2-200SA-33	KNURL	2.26 (20)
ST-11P2-150SA-33	KNURL	1.69 (15)

Asymmetric Torque Versions			
Part Number	**Shaft Style**	**Forward Torque N•m (in•lbf)**	**Reverse Torque N•m (in•lbf)**
ST-11P2-400FA-33	HEX	4.52 (40)	3.16 (28)
ST-11P2-350FA-33	HEX	3.95 (35)	2.77 (24.5)
ST-11P2-300FA-33	KNURL	3.39 (30)	2.37 (21)
ST-11P2-250FA-33	KNURL	2.82 (25)	1.98 (17.5)
ST-11P2-200FA-33	KNURL	2.26 (20)	1.58 (14)
ST-11P2-150FA-33	KNURL	1.69 (15)	1.19 (10.5)
ST-11P2-400RA-33	HEX	3.16 (28)	4.52 (40)
ST-11P2-350RA-33	HEX	2.77 (24.5)	3.95 (35)
ST-11P2-300RA-33	KNURL	2.37 (21)	3.39 (30)
ST-11P2-250RA-33	KNURL	1.98 (17.5)	2.82 (25)
ST-11P2-200RA-33	KNURL	1.58 (14)	2.26 (20)
ST-11P2-150RA-33	KNURL	1.19 (10.5)	1.69 (15)

- **Designed for overmolding**
- **Brings constant torque performance to a wide range of applications**
- **Space efficient design provides high torque in minimum space**
- **Never requires adjustment**

Material and Finish

Zinc alloy and hardened steel

Performance Details

Cycle performance:
20,000 cycles, see trade drawing for details

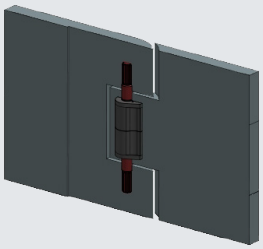

Part Number

See table

ST-20L Hinge

Position control · Constant torque · Press-in · Nut mounting

- **Smooth operation**
- **Space efficient design provides high torque in minimum space**
- **Constant torque, never needs adjusting**

Material and Finish

Zinc alloy and steel, natural

Performance Details

Radial load:
Maximum static load: 400 N (90 lbf)

Axial load:
Please note this hinge will not resist axial loads.

Cycle performance:
20,000 cycles within ±20% of static torque specification

Part Number

See table

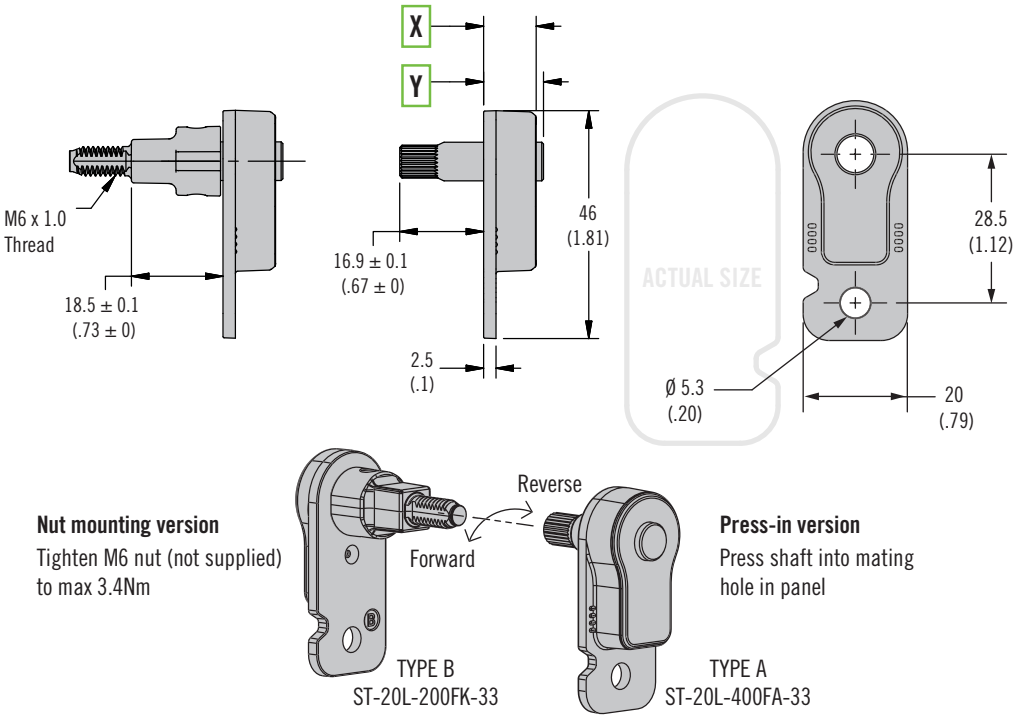

Nut mounting version
Tighten M6 nut (not supplied) to max 3.4Nm

Press-in version
Press shaft into mating hole in panel

Symmetric Torque					
	Part Number		Static Torque (Forward and Reverse) N·m (in·lbf)	Dimension X mm (in)	Dimension Y mm (in)
	Type A	Type B			
Press-In	ST-20L-200SA-33	ST-20L-200SB-33	1.75 (15.50)	7.2 (.28)	8.8 (.35)
	ST-20L-400SA-33	ST-20L-400SB-33	3.5 (31.00)	10.6 (.42)	12.1 (.48)
Nut Mount	ST-20L-200SJ-33	ST-20L-200SK-33	1.75 (15.50)	7.2 (.28)	8.8 (.35)
	ST-20L-400SJ-33	ST-20L-400SK-33	3.5 (31.00)	10.6 (.42)	12.1 (.48)

Asymmetric Torque						
	Part Number		Static Torque N·m (in·lbf)		Dimension X mm (in)	Dimension Y mm (in)
	Type A	Type B	Forward Torque N·m (in·lbf)	Reverse Torque N·m (in·lbf)		
Press-In	ST-20L-100FA-33	ST-20L-100FB-33	1.0 (8.85)	0.75 (6.65)	7.2 (.28)	8.8 (.35)
	ST-20L-100RA-33	ST-20L-100RB-33	0.75 (6.65)	1.0 (8.85)		
	ST-20L-200FA-33	ST-20L-200FB-33	2.0 (17.70)	1.5 (13.30)		
	ST-20L-200RA-33	ST-20L-200RB-33	1.5 (13.30)	2.0 (17.70)		
	ST-20L-300FA-33	ST-20L-300FB-33	3.0 (26.65)	2.3 (19.90)	8.9 (.35)	12.1 (.48)
	ST-20L-300RA-33	ST-20L-300RB-33	2.3 (19.90)	3.0 (26.65)		
	ST-20L-400FA-33	ST-20L-400FB-33	4.0 (35.40)	3.0 (26.65)	10.6 (.42)	
	ST-20L-400RA-33	ST-20L-400RB-33	3.0 (26.65)	4.0 (35.40)		
Nut Mount	ST-20L-100FJ-33	ST-20L-100FK-33	1.0 (8.85)	0.75 (6.65)	7.2 (.28)	8.8 (.35)
	ST-20L-100RJ-33	ST-20L-100RK-33	0.75 (6.65)	1.0 (8.85)		
	ST-20L-200FJ-33	ST-20L-200FK-33	2.0 (17.70)	1.5 (13.30)		
	ST-20L-200RJ-33	ST-20L-200RK-33	1.5 (13.30)	2.0 (17.70)		
	ST-20L-300FJ-33	ST-20L-300FK-33	3.0 (26.65)	2.3 (19.90)	8.9 (.35)	12.1 (.48)
	ST-20L-300RJ-33	ST-20L-300RK-33	2.3 (19.90)	3.0 (26.65)		
	ST-20L-400FJ-33	ST-20L-400FK-33	4.0 (35.40)	3.0 (26.65)	10.6 (.42)	
	ST-20L-400RJ-33	ST-20L-400RK-33	3.0 (26.65)	4.0 (35.40)		

Dimensions in millimeters (inch) unless otherwise stated

ST-20L Hinge

Position control · Constant torque · Panel Preparation

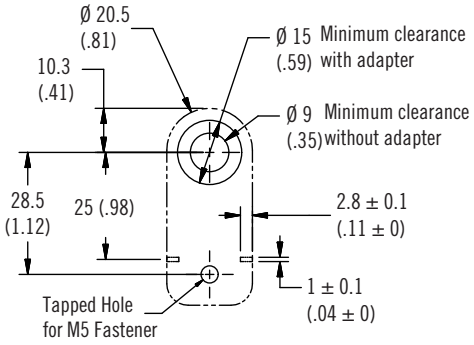

- **Smooth operation**
- **Space efficient design provides high torque in minimum space**
- **Constant torque, never needs adjusting**

Installation Notes

1. Install hinge using M5 screw (not supplied)
2. For proper function, application should include a pair of hinges and constrain the system axially.
3. Hinge installation to frame or door may be reversed, but should be used as opposing pairs to avoid the hinge coming apart.
4. For alternative panel thicknesses and adaption to your application, please contact Southco
5. For panel preparation and installation details please refer to Southco trade drawing.

SIMPLIFIED INSTALLATION DETAILS

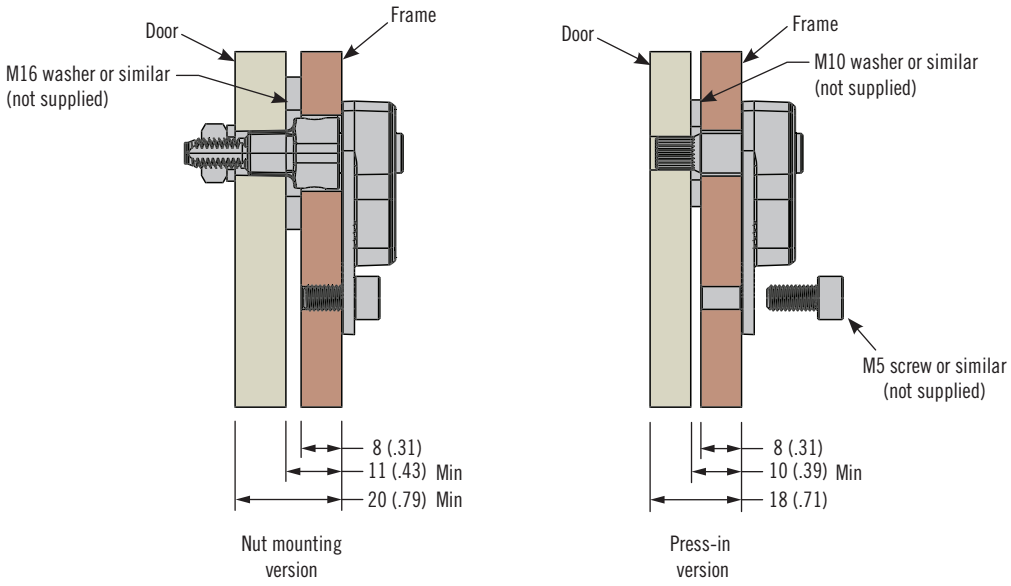

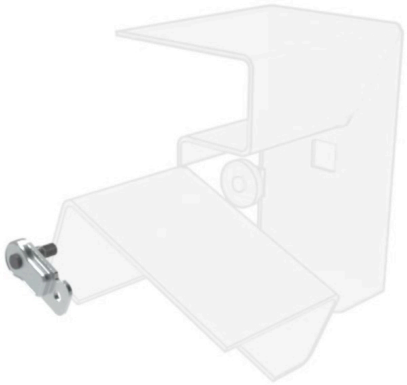

Dimensions in millimeters (inch) unless otherwise stated

AH-2E Hinge

Position control · Constant torque

- **Smooth, zero backlash operation**
- **Space efficient design provides high torque in minimum space**
- **Constant torque, never needs adjusting**

Material and Finish

Aluminium alloy and steel, natural

Performance Details

Radial load:
Maximum static load: 650 N @ 100mm from hinge axis (145 lbf 4")

Axial load:
Maximum static load: 1500 N (330 lbf)

Cycle performance:
20,000 cycles within ±20% of static torque specification

Installation Notes

Install hinge using 2x M6 or No 12 CSK screws or equivalent (not supplied). Ensure substrate and screw length is suitable for required application strength

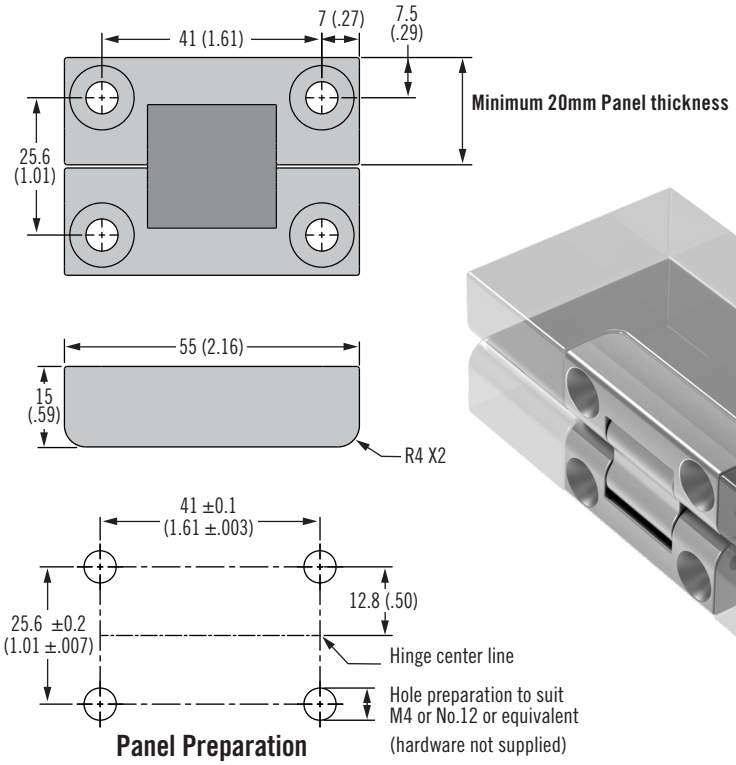

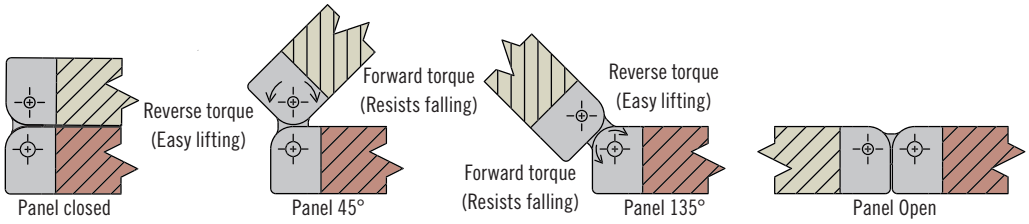

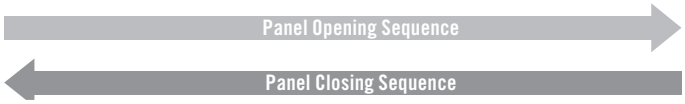

Part Number Selection

See table

AH - 2E - 20 XX A 2 - FF

FF Finish
- **50** Black anodised
- **63** Natural aluminium
- **70** Silver electroplated

XX Torque	Forward Torque N·m (in·lbf)	Reverse Torque N·m (in·lbf)
00	Free Operating	
12	1.5 (13.2)	1.1 (9.7)
16	1.8 (16)	1.3 (11.5)
20	2 (17.7)	1.5 (13.2)
24	2.2 (19.4)	1.6 (14)

Dimensions in millimeters (inch) unless otherwise stated

AH-2E Hinge

Position control · Constant torque

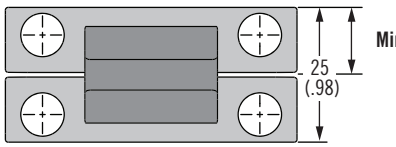

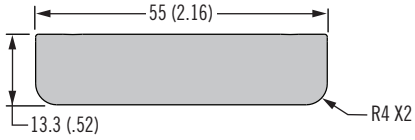

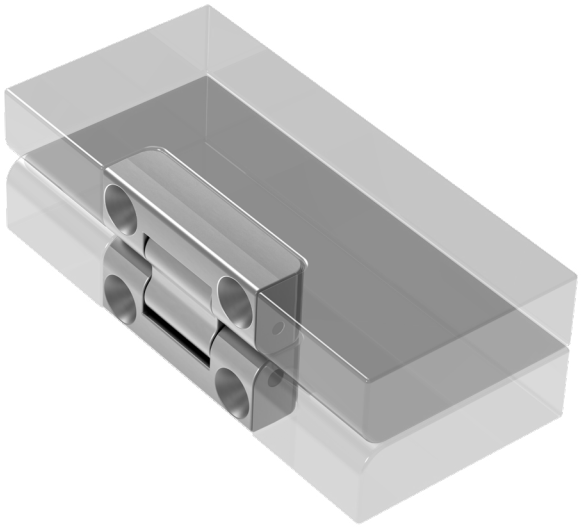

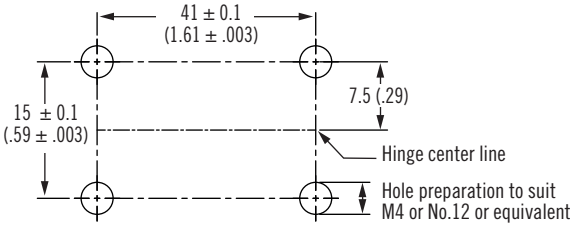

Panel Preparation

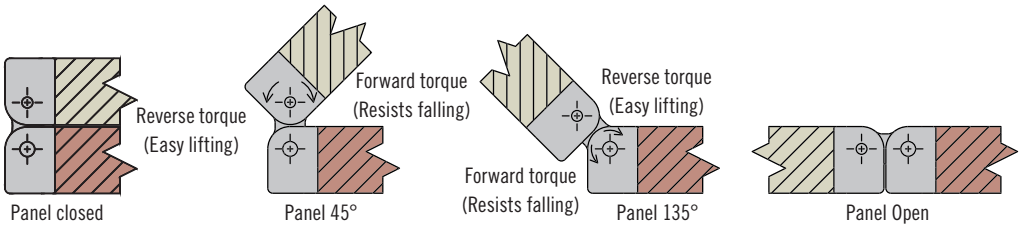

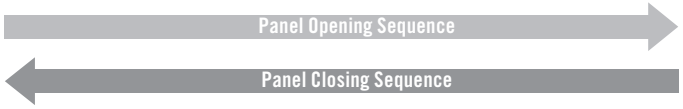

AH - 2E - 12 XX A 2 - FF

FF Finish
24 Stainless steel

XX Torque	Symmetric Torque N·m (in·lbf)
00	Free Operating
04	0.3 (2.7)
08	0.6 (5.3)
12	1 (8.8)

- **Smooth, zero backlash operation**
- **Space efficient design provides high torque in minimum space**
- **Constant torque, never needs adjusting**

Material and Finish

Stainless steel and steel

Performance Details

Cycle performance:
20,000 cycles within ±20% of static torque specification

Installation Notes

Install hinge using 2x M4 or No 8 CSK screws or equivalent (not supplied). Ensure substrate and screw length is suitable for required application strength

Part Number Selection

See table

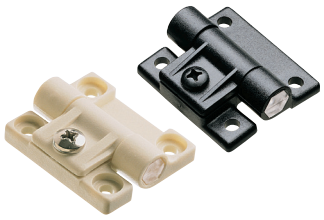

E6 Hinge

Position control · Adjustable torque

- **Hold doors open, in position**
- **User-adjusted holding torque**

Material and Finish

Leaves: Acetal
Pin: Polycarbonate
Adjustment screw & nut: Stainless steel

Performance Details

Radial load:
Large: 3110 N (700 lbf)
Medium: 1780 N (400 lbf)

Axial load:
Large: 2000 N (450 lbf)
Medium: 890 N (200 lbf)

Maximum prevailing torque of hinge:
Large: 4 N•m (35 in•lbf)
Medium: 0.8 N•m (7 in•lbf)

Operating temperature range:
-5°C (20°F) to 65°C (150°F)

Installation Notes

Mount with:
Large: M6 (1/4-20)
Medium: M4 (8-32)
(screws not supplied)

Part Number

See table

Large

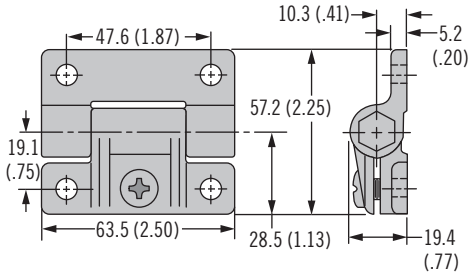

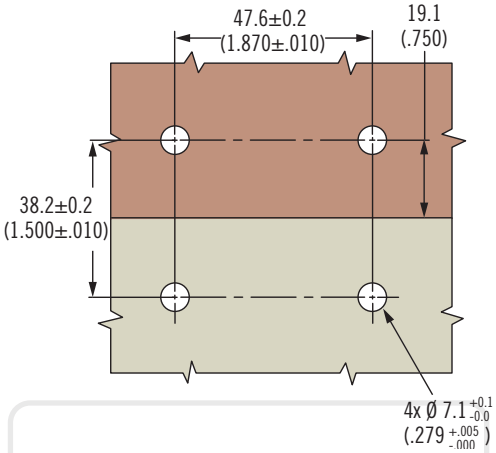

ACTUAL SIZE LARGE

Medium

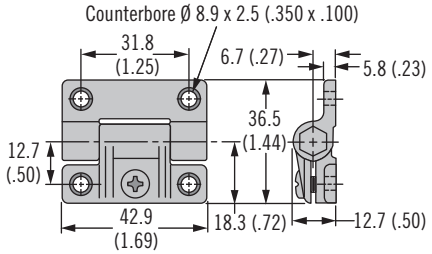

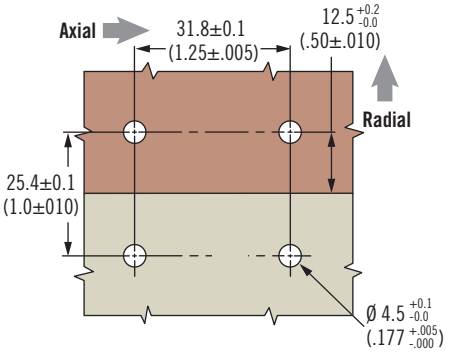

ACTUAL SIZE MEDIUM

Torque Adjustment

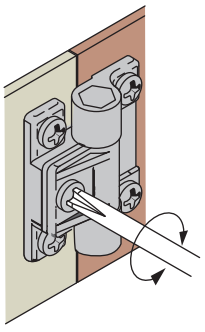

Part Number		
Color	**Large**	**Medium**
Black	E6-10-501-20	E6-10-301-20
White	E6-10-501-10	E6-10-301-10

Dimensions in millimeters (inch) unless otherwise stated

E6 Hinge

Position control · Adjustable torque

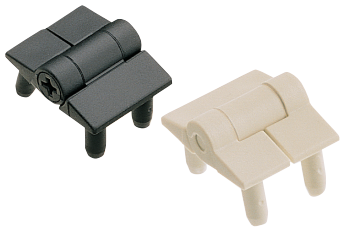

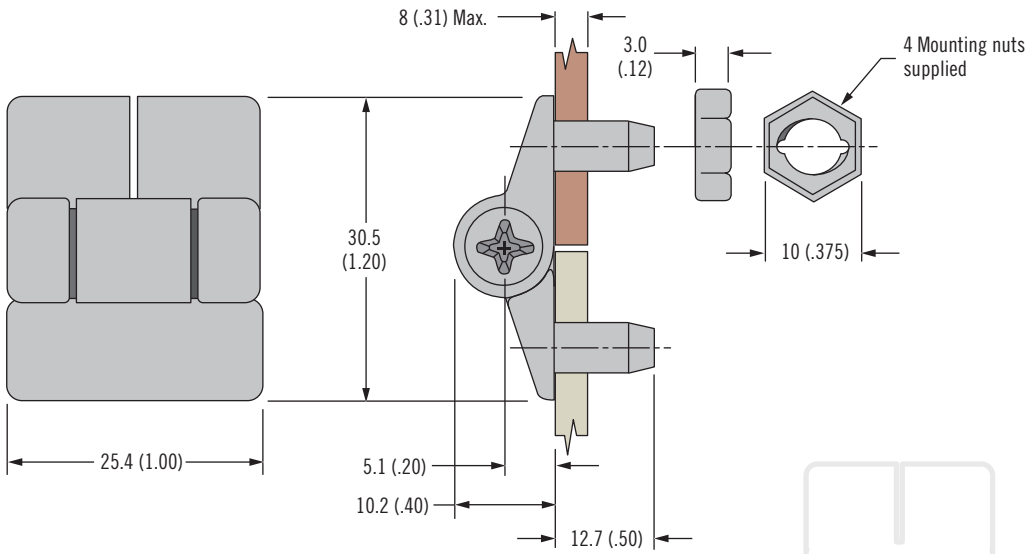

ACTUAL SIZE

- **Hold doors open, in position**
- **User-adjusted holding torque**

Material and Finish

Acetal, nylon
Mounting hardware:
Steel, zinc plated

Performance Details

Radial load:
Average ultimate load:
1150 N (260 lbf)

Axial load:
Average ultimate load:
950 N (214 lbf)

Maximum prevailing torque of hinge:
0.25 N•m (2.2 in•lbf)

Operating temperature range:
-5°C (-20°F) to 65°C (150°F)

Notes

Packaging: One hinge and four mounting nuts per bag

1. Prepare door and frame

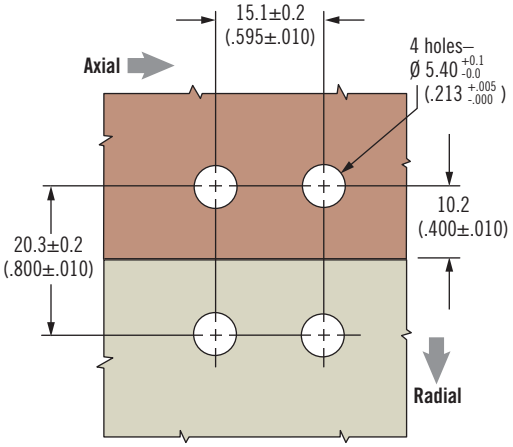

2. Mount

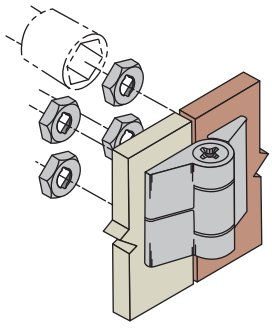

3. Adjust torque

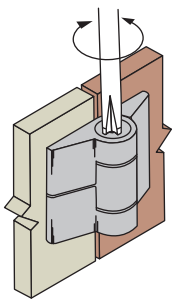

Color	Part Number
Black	E6-10-101-20
White	E6-10-101-30

Part Number

See table

G6 Hinge

Position control · Detent

- **Holds doors open without secondary mechanical support**
- **Detent holds door at 120° and 170°**
- **Can be opened to 180°**

Material and Finish

Acetal and nylon, black

Performance Details

Radial load:
Maximum static load: 130 N (30 lbf)
Average ultimate load:
970 N (220 lbf)

Axial load:
Maximum static load: 130 N (30 lbf)
Average ultimate load:
1450 N (325 lbf)

Cycle life: 10,000 cycles

Operating temperature range:
-20 °C (0° F) to 80° C (180° F)

Installation Notes

Screws not supplied

Hinge designed to accommodate M4 (No. 8) size Pan Head mounting hardware.

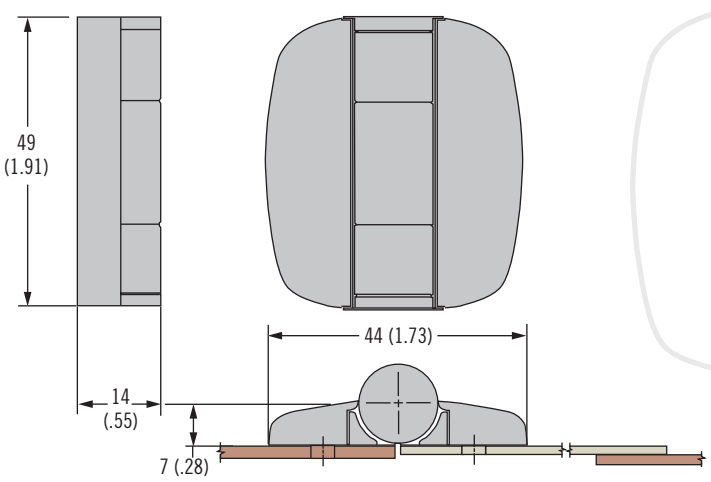

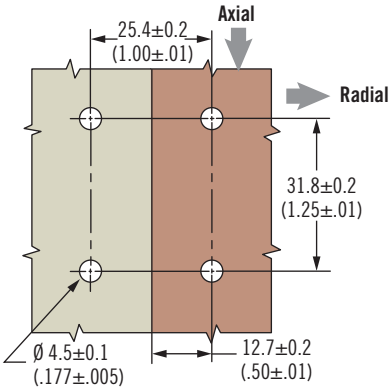

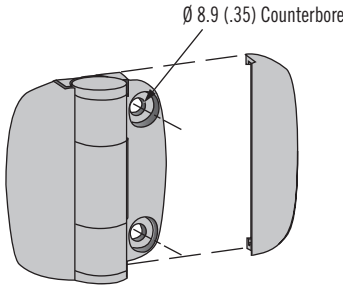

Part Number

See table

Part Number	Detent Angle	Positioning Torque
G6-0-1	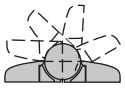 Free swinging (no detents)	~
G6-5-1	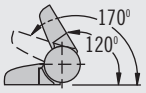	1.1 N•m (10 in•lbf)

Dimensions in millimeters (inch) unless otherwise stated

C6 Hinge

Position control · Detent

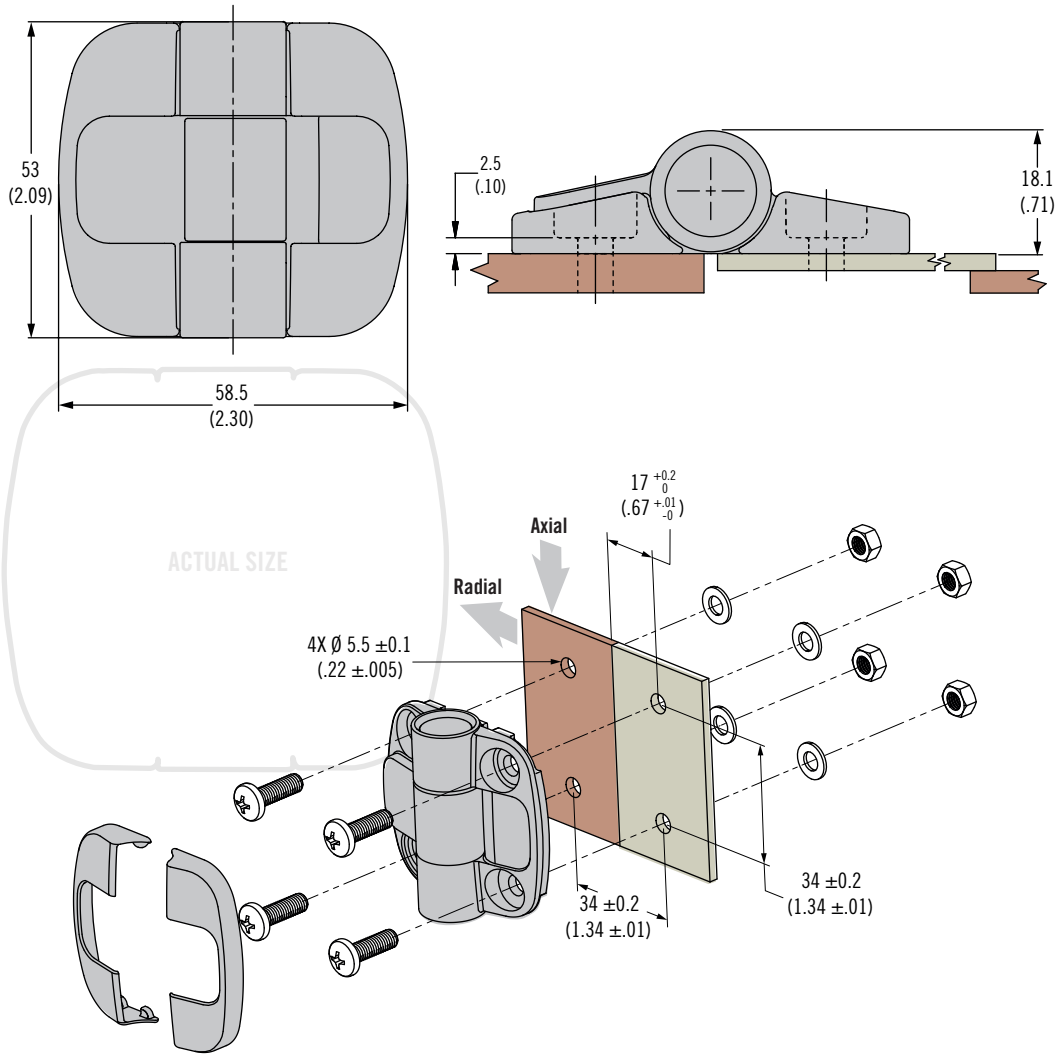

Type	Positioning Torque N•m (in•lbf)	Part Number	
		Black	White
No Detents	Free operating	C6-220	C6-220-1
80 Degree	0.7 (6)	C6-221	C6-221-1
	1.1 (10)	C6-222	C6-222-1
	1.7 (15)	C6-223	C6-223-1
115 Degree	0.7 (6)	C6-224	C6-224-1
	1.1 (10)	C6-225	C6-225-1
	1.7 (15)	C6-226	C6-226-1
150 Degree	0.7 (6)	C6-227	C6-227-1
	1.1 (10)	C6-228	C6-228-1
	1.7 (15)	C6-229	C6-229-1

- **Holds doors open without secondary mechanical support**
- **Detents holds door at 80°, 115° or 150°**
- **All versions can be further opened to 180°**

Material and Finish

Acetal, black or white
Internal components:
Stainless steel

Performance Details

Radial load:
Maximum static load:
450 N (100 lbf)
Average ultimate load:
2600 N (575 lbf)

Axial load:
Maximum static load:
450 N (100 lbf)
Average ultimate load:
1800 N (400 lbf)

Cycle life: Up to 20,000

Operating temperature range:
-40°C (-40°F) to 80°C (180°F)

Installation Notes

Mounting hardware not supplied. Designed to accommodate M5 (No. 10) mounting hardware with a maximum head diameter of 10.1 (.40) and a maximum head height of 3 (.12).

Part Number

See table

G7 Hinge

Bi-stable

- **Automatically drives to one of two preferred positions**
- **Invisible when installed**

Material and Finish

Acetal black, steel, zinc plated

Performance Details

Cycle performance: 20,000 cycles within ± 20% of normal torque specification

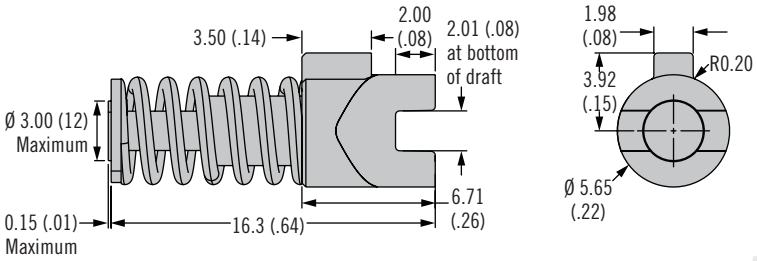

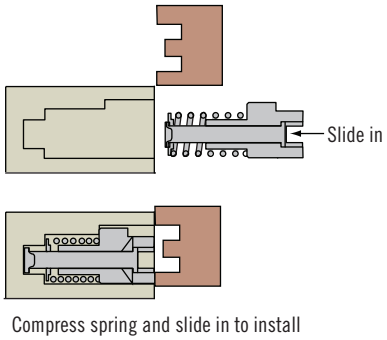

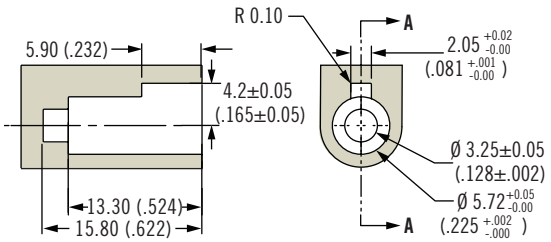

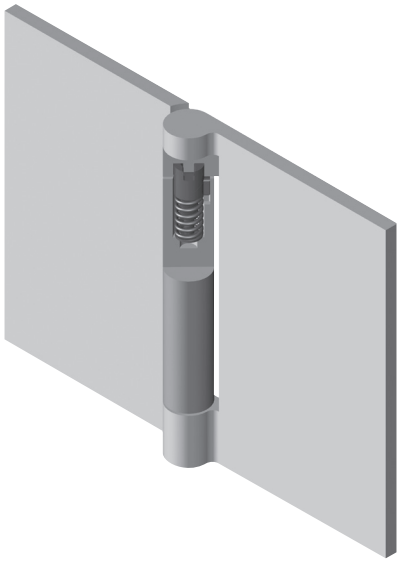

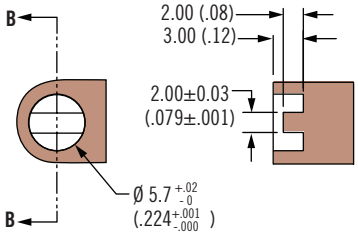

Part Number

See table

Part Number	Maximum Torque N·m (in·lbf)
G7-6A-3P-1	0.035 (.3)

Dimensions in millimeters (inch) unless otherwise stated

96 Hinge
Lift-off

Type A

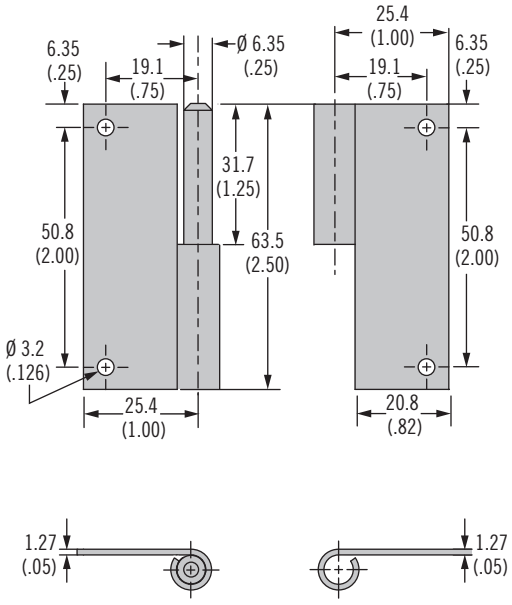

Type B

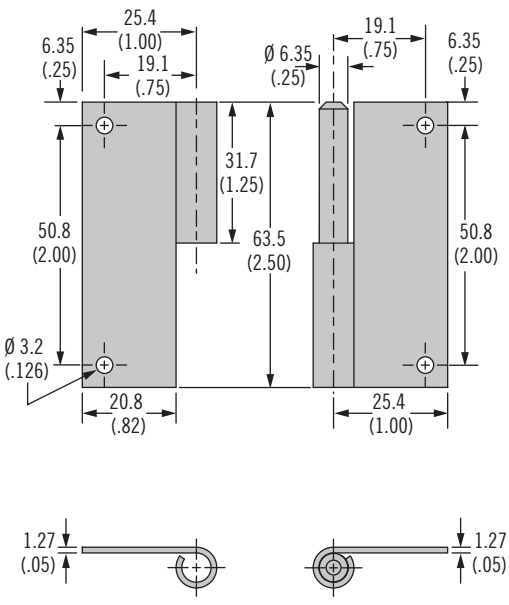

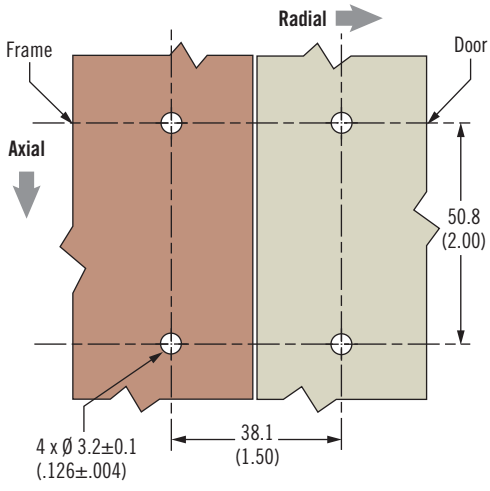

Type "A" application shown

ACTUAL SIZE

- **Allows for quick, easy door removal**
- **All metal construction**

Material and Finish

Steel, zinc plated or stainless steel

Material	Part Number	
	Type A	Type B
Steel	96-04-N1WL	96-04-N1WR
Stainless Steel	96-04-S1WL	96-04-S1WR

Part Number

See table

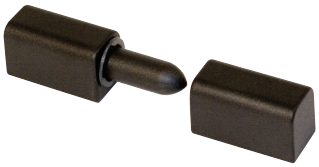

96 Hinge

Lift-off · In-line · Zinc

- **Allows for quick, easy door removal**
- **Door can also be permanently installed**

Material and Finish

Zinc alloy, black powder coated

Performance Details

	Radial Load	Axial Load
Maximum static load	1300 N (300 lbf)	2200 N (500 lbf)
Average ultimate load	3300 N (750 lbf)	9300 N (2100 lbf)

Installation Notes

Screws not supplied.
Maximum tightening torque of screw: 8.5 N•m (75 in•lbf)

Calculate screw length using the following formula:
Door thickness + 5 (.200)

In-line mount preparation:
To allow for 180° rotation R or S must be < 25.4 (1.00).

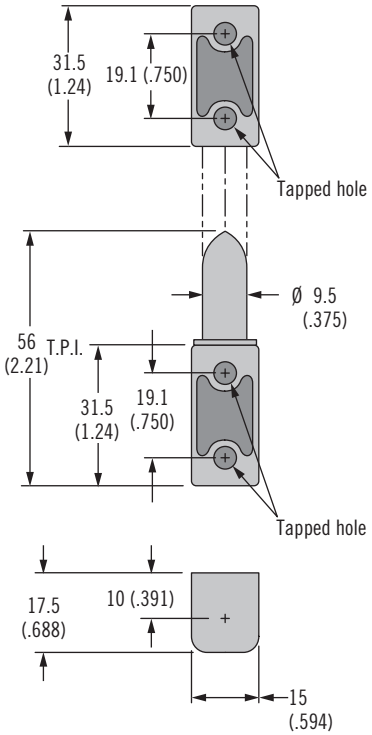

For Lift-Off Mounting

For Non Lift-Off Mounting

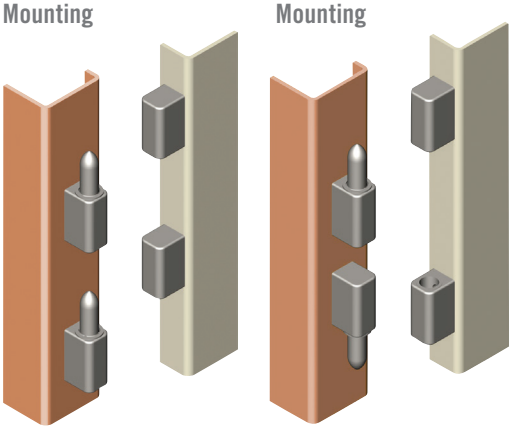

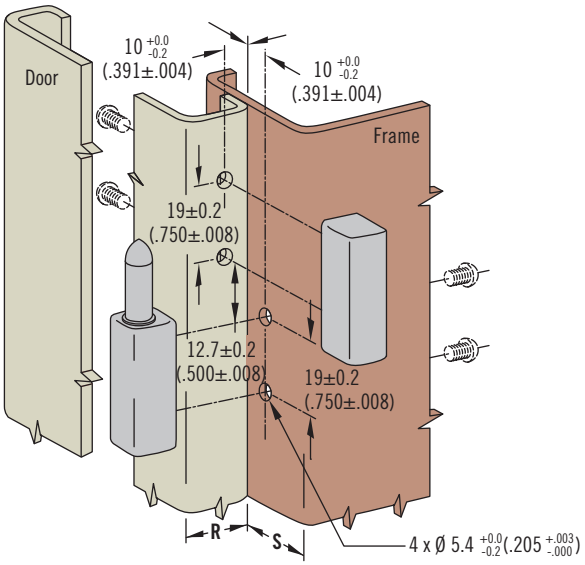

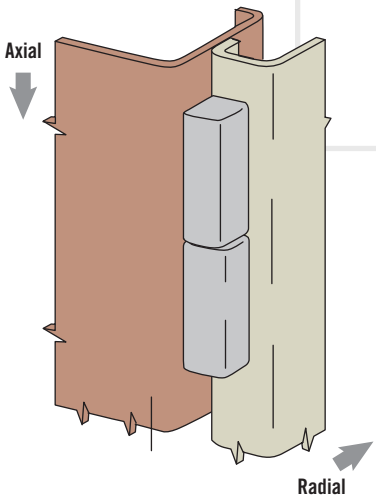

ACTUAL SIZE

Part Number

See Table

Tapped Hole	Part Number
Imperial 10-32	96-10-500-50
Metric M5 x 0.8	96-50-500-50

Dimensions in millimeters (inch) unless otherwise stated

southco®

96 Hinge

Lift-off · Offset · Zinc

- **Allows for quick, easy door removal**
- **Door can also be permanently installed**

Material and Finish

Zinc alloy, black powder coated

Performance Details

	Radial Load	Axial Load
Maximum static load	1300 N (300 lbf)	2200 N (500 lbf)
Average ultimate load	3300 N (750 lbf)	9300 N (2100 lbf)

Installation Notes

Screws not supplied.
Maximum tightening torque of screw: 8.5 N•m (75 in•lbf)

Calculate screw length using the following formula:
Door thickness + 10 (.400)

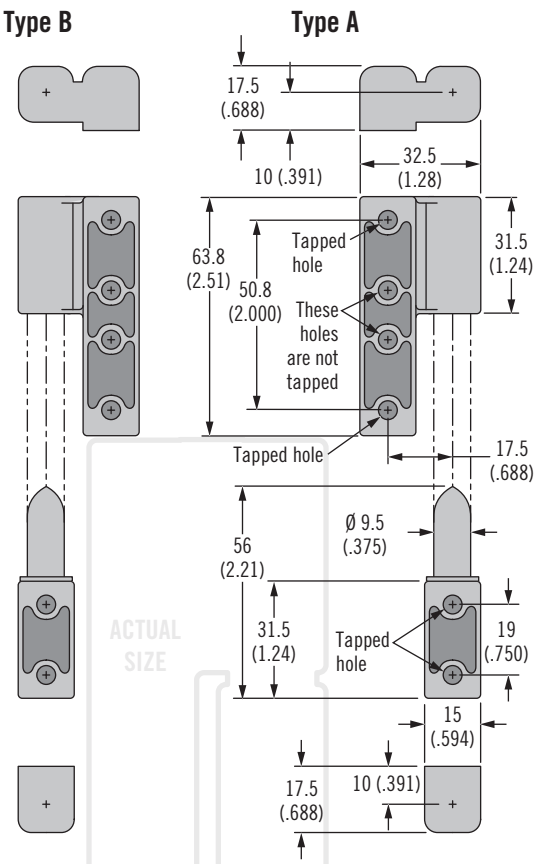

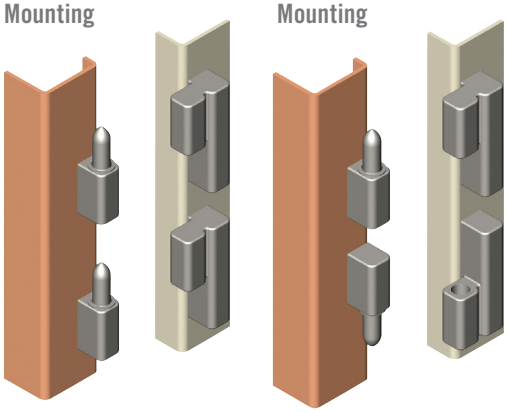

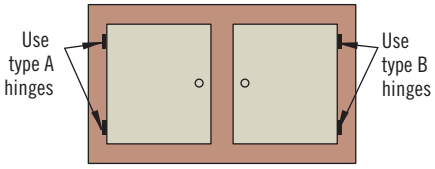

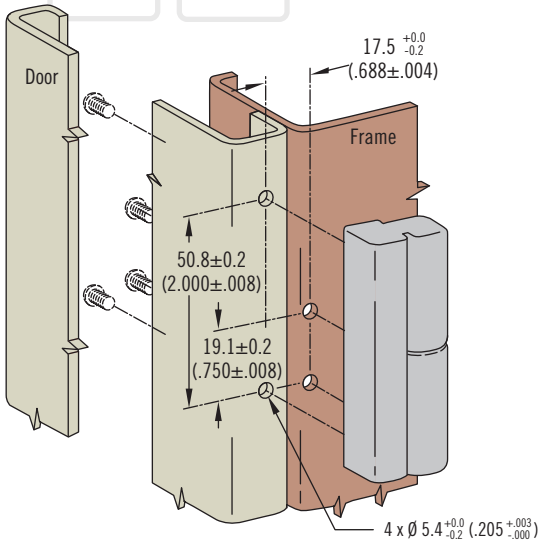

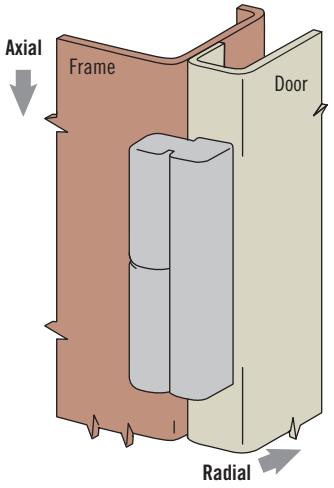

Tapped Hole	Part Number	
	Type A	Type B
Imperial 10-32	96-10-510-50	96-10-520-50
Metric M5 x 0.8	96-50-510-50	96-50-520-50

Part Number

See table

96 Hinge

Lift-off · In-line · Zinc and stainless steel

- **Allows for quick, easy door removal**
- **Door can also be permanently installed**

Material and Finish

Zinc alloy, chrome plated, powder coated or stainless steel

Performance Details

Radial load
Maximum static load:
Zinc alloy: 1300 N (300 lbf)
Stainless steel: 3000 N (670 lbf)

Axial Load
Maximum static load:
Zinc alloy: 2200 N (500 lbf)
Stainless steel: 5000 N (1120 lbf)

Installation Notes

Screws not supplied.
Attach hinge with four M5 x 0.8
Maximum screw length = door (or frame) thickness + 10 (.400)

Accessories

Black EPDM gasket kit 96-0-73469 (order separately)

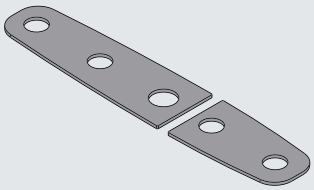

Part Number

See table

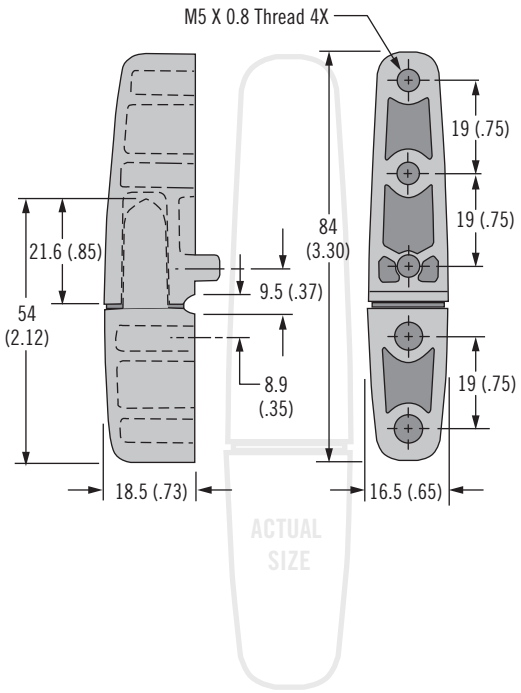

For Lift-Off Mounting

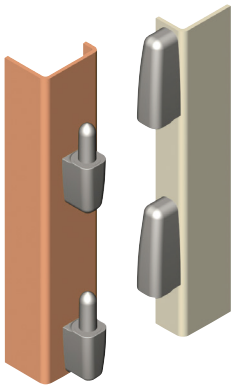

For Non Lift-Off Mounting

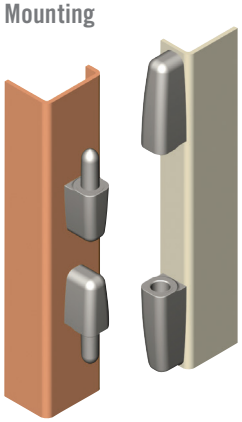

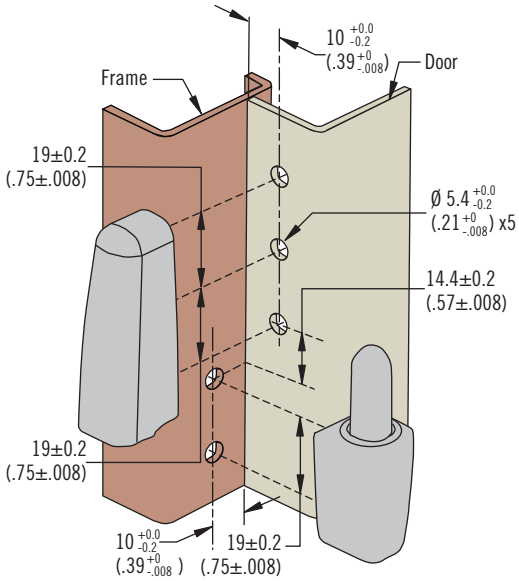

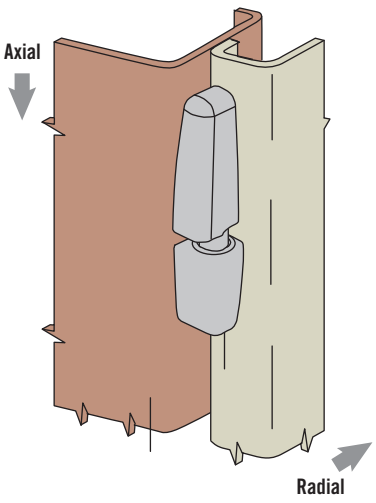

Material & Finish	Part Number
Zinc alloy, bright chrome	96-MA-80-10
Zinc alloy, black powder coated	96-MA-80-50
Zinc alloy, satin chrome	96-MA-80-20
Stainless steel, polished	96-MA-80-24

Dimensions in millimeters (inch) unless otherwise stated

96 Hinge

Lift-off · Offset · Zinc and stainless steel

Type A

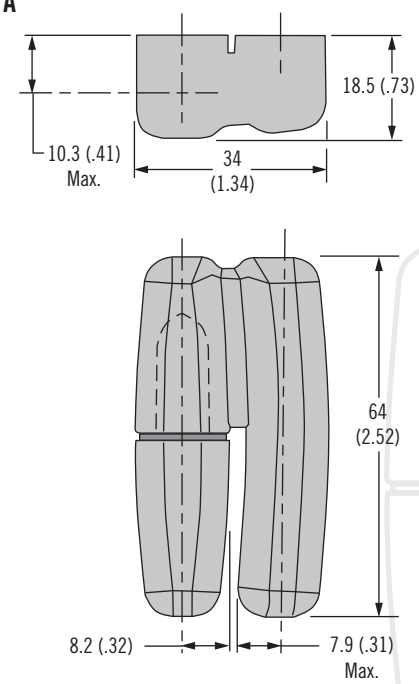

Type B

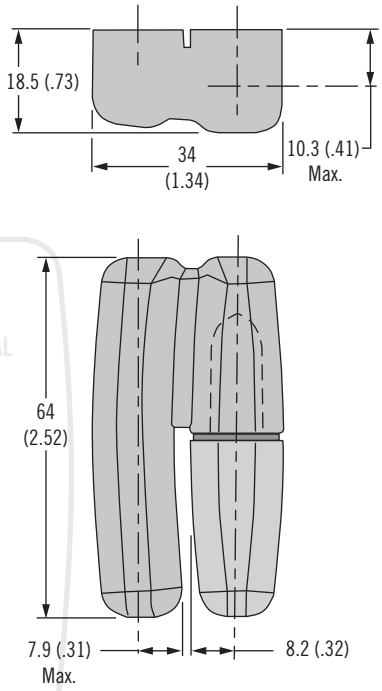

ACTUAL SIZE

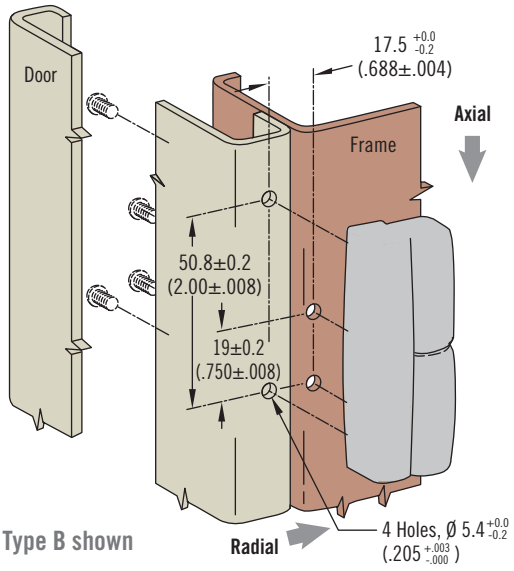

Type B shown

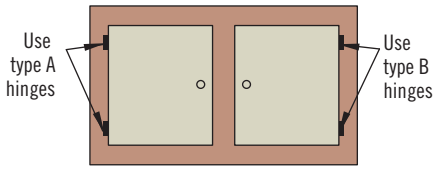

For Lift-Off Mounting

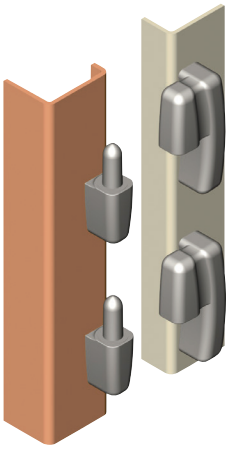

For Non Lift-Off Mounting

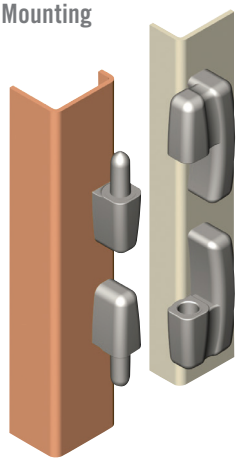

Material & Finish	Part Number	
	Type A	Type B
Zinc alloy, bright chrome	96-MA-8A-10	96-MA-8B-10
Zinc alloy, black powder coated	96-MA-8A-50	96-MA-8B-50
Zinc alloy, satin chrome	96-MA-8A-20	96-MA-8B-20
Stainless steel, polished	96-MA-8A-24	96-MA-8B-24

- **Allows for quick, easy door removal**
- **Door can also be permanently installed**

Material and Finish

Zinc alloy, chrome plated, powder coated or stainless steel

Performance Details

Radial load
Maximum static load:
Zinc alloy: 1300 N (300 lbf)
Stainless steel: 3000 N (670 lbf)

Axial Load
Maximum static load:
Zinc alloy: 2200 N (500 lbf)
Stainless steel: 5000 N (1120 lbf)

Installation Notes

Screws not supplied.
Attach hinge with four M5 x 0.8
Maximum screw length = door (or frame) thickness + 10 (.400)

Accessories

Black EPDM gasket kit 96-25-8A-02 (order separately)

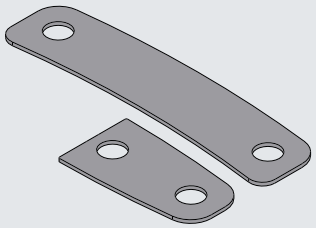

Part Number

See table

Dimensions in millimeters (inch) unless otherwise stated

96 Hinge

Lift-off · In-line · Offset · Plastic

- Allows for quick, easy door removal
- Corrosion-resistant materials
- Door can also be permanently installed

Material and Finish

Glass-filled nylon, black

Performance Details

300 Series	Radial Load	Axial Load
Maximum static load	670 N (150 lbf)	1560 N (350 lbf)
Average ultimate load	1100 N (250 lbf)	2500 N (550 lbf)

400 Series	Radial Load	Axial Load
Maximum static load	1000 N (225 lbf)	2000 N (450 lbf)
Average ultimate load	1900 N (425 lbf)	4900 N (1100 lbf)

In-Line Knuckle Style

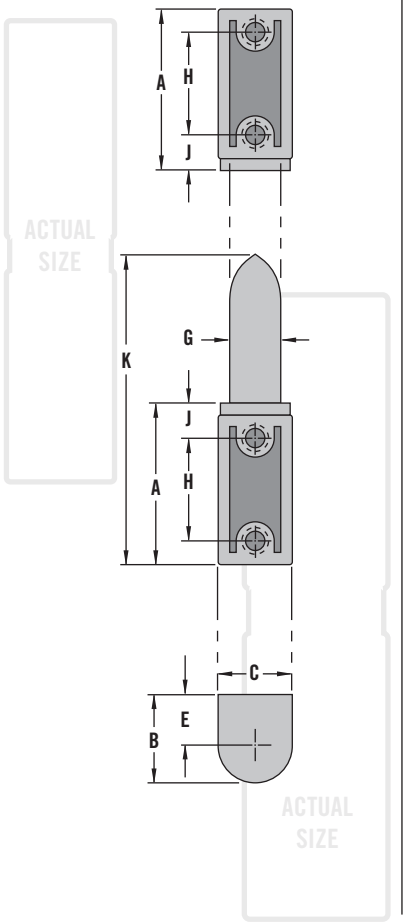

Offset Knuckle Style

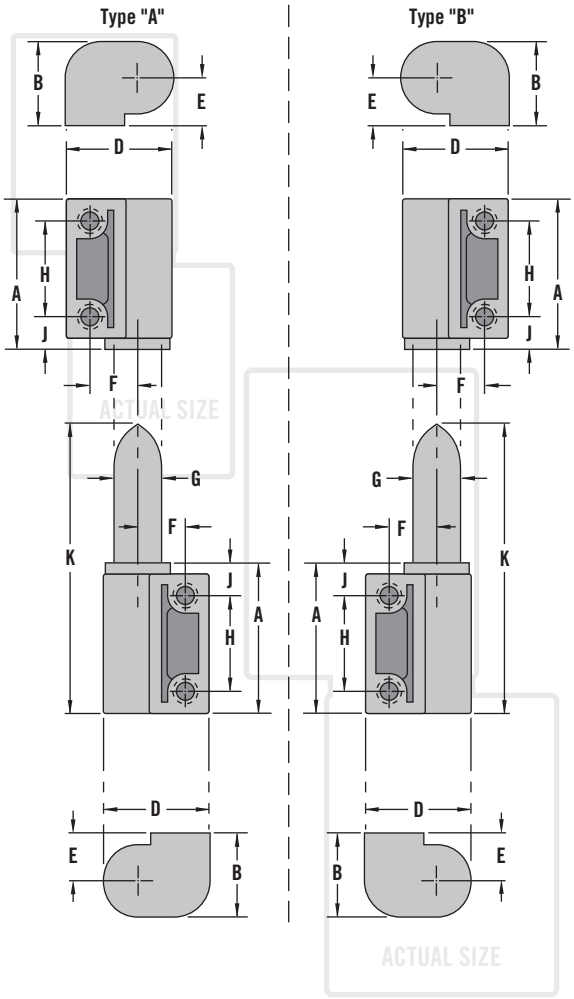

Mounting variations

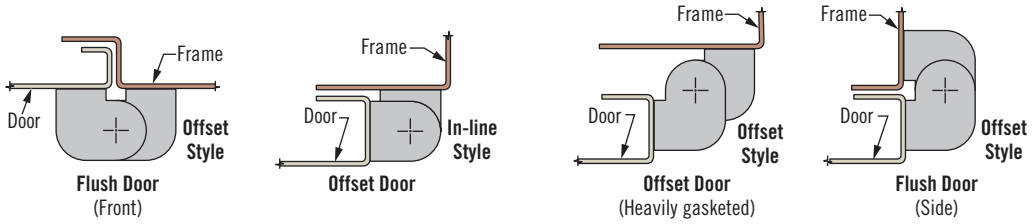

Part Number

See table

Series	Tapped Hole	Dimensions								Part Number		
		A	B	C	D	E, F & G	H	J	K	In-Line Knuckle Style	Offset Knuckle Style Type "A"	Offset Knuckle Style Type "B"
300	M5	31 (1.22)	16.7 (.66)	14.3 (.56)	21.5 (.84)	9.5 (.38)	19 (.75)	7 (.28)	58 (2.28)	96-50-300-11	96-50-310-11	96-50-320-11
	10-24									96-10-300-11	96-10-310-11	96-10-320-11
400	M6	41.3 (1.63)	22.2 (.88)	19 (.75)	28.5 (1.13)	12.7 (.50)	25.5 (1.00)	9.5 (.38)	78 (3.06)	96-50-400-11	96-50-410-11	96-50-420-11
	1/4-20									96-10-400-11	96-10-410-11	96-10-420-11

Dimensions in millimeters (inch) unless otherwise stated

In-Line Knuckle Style

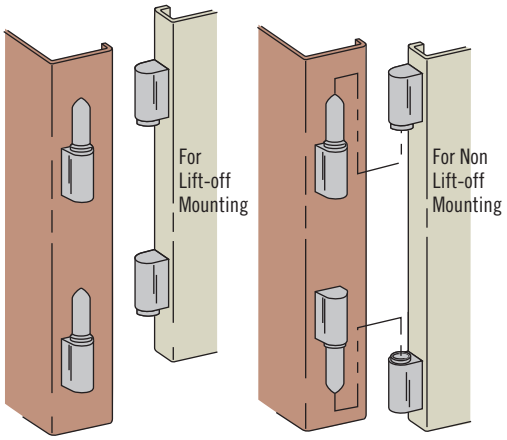

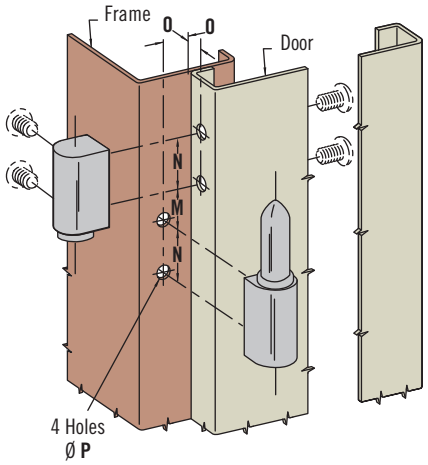

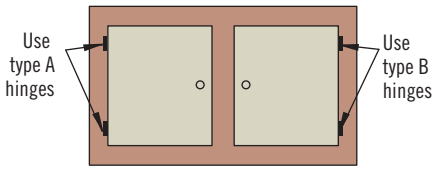

Offset Knuckle Style

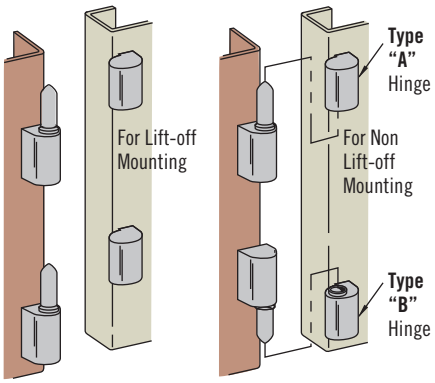

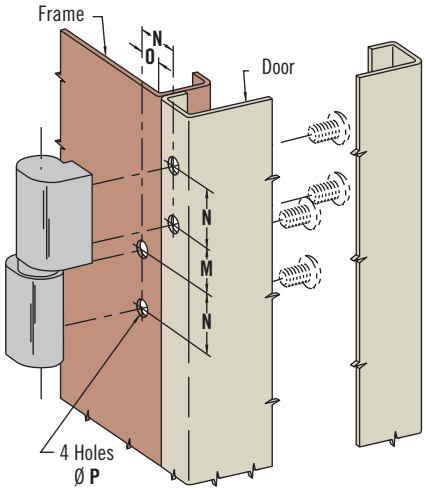

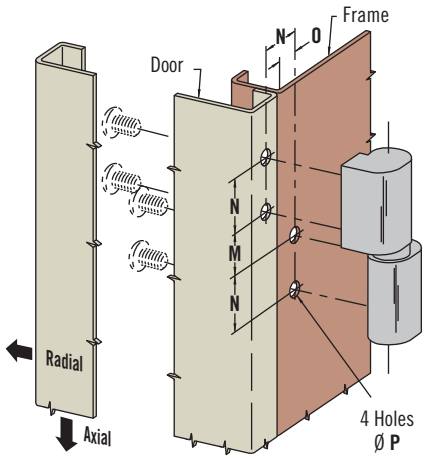

Installation Notes

Screws not supplied
Maximum tightening torque of screw: 2.8 N•m (25 in•lbf)
Calculate screw length using the following formula:
Door thickness + adjustment value

Series	Adjustment Value	
	In-Line	Offset
300	4.8 (.19)	6.5 (.25) Min. to 9.5 (.38) Max.
400	6.4 (.25)	9.5 (.38) Min. to 12.7 (.50) Max.

Series	Installation Dimensions			
	M	N	O	P
300	$14.3^{+0.0}_{-0.3}$ (.563±.008)	$19^{+0.2}_{-0.1}$ (.750±.008)	$9.5^{+0.3}_{-0.1}$ (.375±.005)	$5.4^{+0.1}_{-0.0}$ ($.205^{+.003}_{-.000}$)
400	$19.0^{+0.0}_{-0.3}$ (.750±.008)	$25.5^{+0.1}_{-0.2}$ (1.000±.008)	$12.7^{+0.2}_{-0.1}$ (.500±.005)	$6.7^{+0.1}_{-0.0}$ ($.264^{+.003}_{-.000}$)

96 Hinge

Lift-off · In-line · Plastic

- **Allows for quick, easy door removal**
- **Door can also be permanently installed**

Material and Finish

Black: Glass-filled nylon
Chrome: PC/ABS blend, chrome

Performance Details

Black	Radial Load	Axial Load
Maximum static load	700 N (155 lbf)	1200 N (270 lbf)
Average Ultimate load	1000 N (224 lbf)	3500 N (785 lbf)

Chrome	Radial load	Axial load
Maximum static load	350 N (79 lbf)	900 N (202 lbf)
Average ultimate load	600 N (135 lbf)	2200 N (495 lbf)

Installation Notes

Recommended tightening torque for mounting screws:
1.6 N•m (14 in•lbf)

Offset mount preparation:
To allow for 180° rotation A or B must be 8.5±1 (.33±.04)

Part Number

See table

Order pin, receiver and 4x screw separately

Receiver

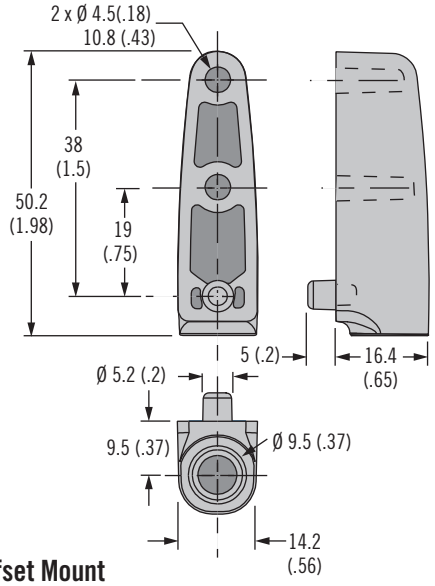

Pin

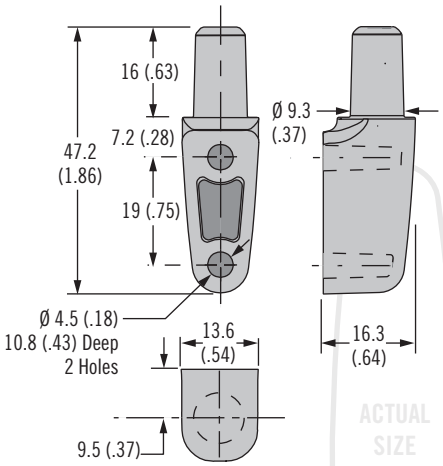

Offset Mount

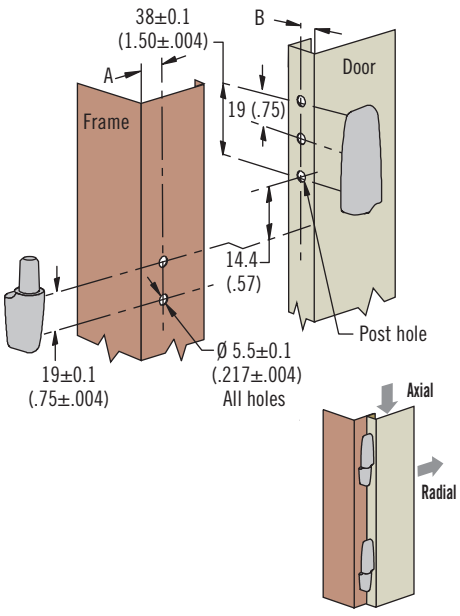

Flush Mount

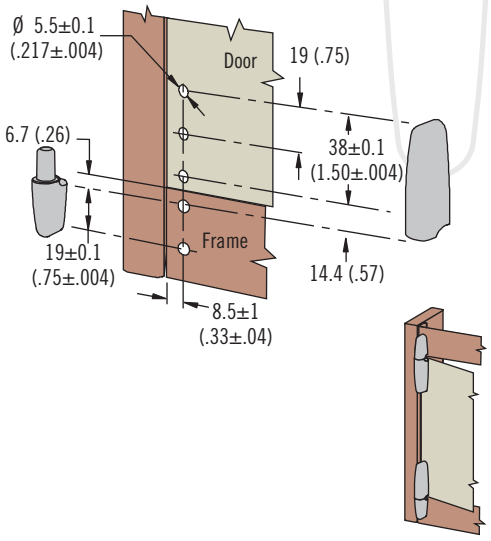

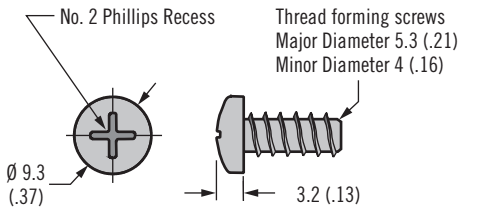

Door Thickness	Part Number
	Screws (4 per bag)
1 - 4 (.04 - .16)	96-79-1
4 - 7 (.16 - .28)	96-79-2
7 - 10 (.28 - .39)	96-79-3
10 - 13 (.39 - .51)	96-79-4

Finish	Part Number	
	Pin	Receiver
Black	96-710	96-720
Chrome	96-711	96-721

Dimensions in millimeters (inch) unless otherwise stated

southco®

96 Hinge

Lift-off · Adjustable compression · In-line · Zinc

Front Mount

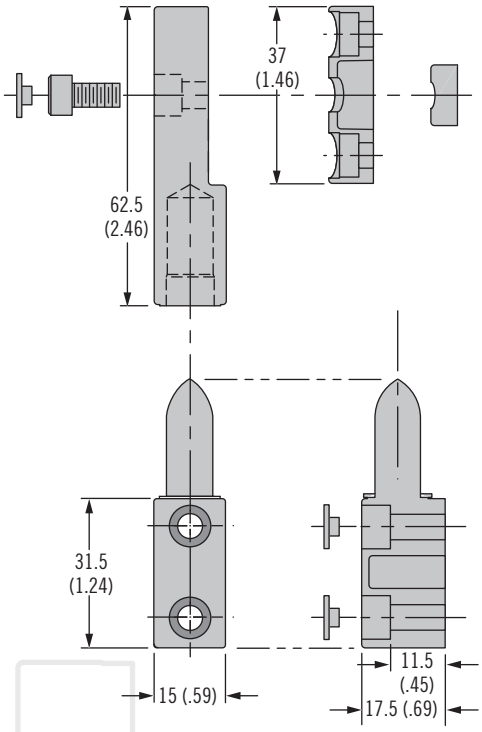

Concealed Mount

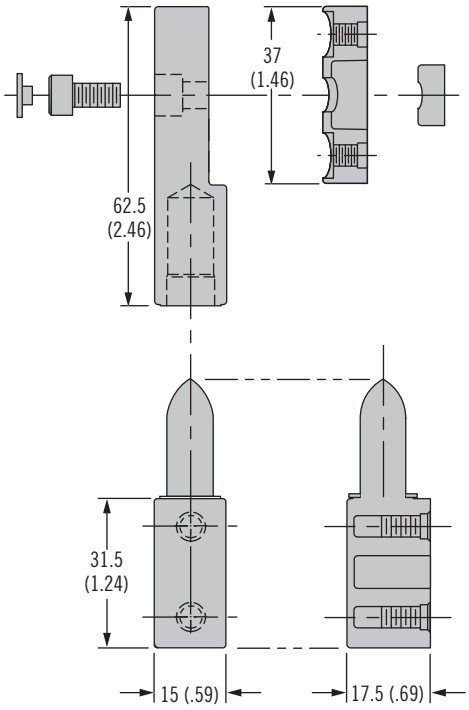

ACTUAL SIZE

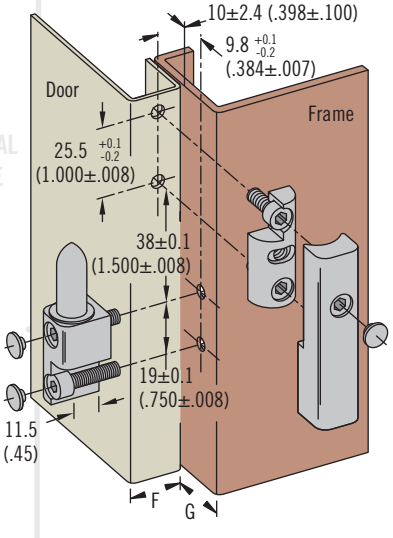

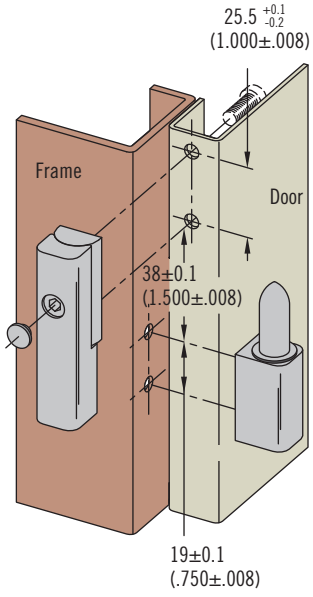

Install Style	Tapped Hole	Part Number
Front mount	Thru hole	96-10-572
Concealed mount	10-32 Imperial	96-10-570
	M5 x 0.8 Metric	96-50-570

- **Adjusts to ensure gasket compression**
- **Allows for quick, easy door removal**

Material and Finish

Zinc alloy, black powder coated

Installation Notes

Screws not supplied.
Maximum screw length equals door or frame thickness plus 7.5 (.30)

Performance Details

	Radial Load	Axial Load
Maximum static load	1000 N (255 lbf)	2220 N (500 lbf)
Average ultimate load	1550 N (350 lbf)	14,000 N (3200 lbf)

Notes

Hinges provide 5 (.20) of total adjustment
Either F Dimension or G dimension must be less than 19.8 (.78) for the door to open a full 180°

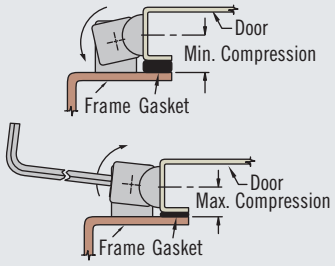

Part Number

See table

96 Hinge

Lift-off · In-line · Zinc

- **Allows for quick, easy door removal**
- **Concealed installation**

Material and Finish

Zinc alloy, black powder coated

Performance Details

	Radial Load	Axial Load
Maximum static load	1100 N (250 lbf)	1250 N (280 lbf)
Average ultimate load	2400 N (530 lbf)	2600 N (580 lbf)

Installation Notes

Screws not supplied.
Recommended tightening torque for mounting screws:
1.1 N•m (10 in•lbf)

Calculate screw length using the following formula:
Door / frame thickness +5 (.20)

In-Line

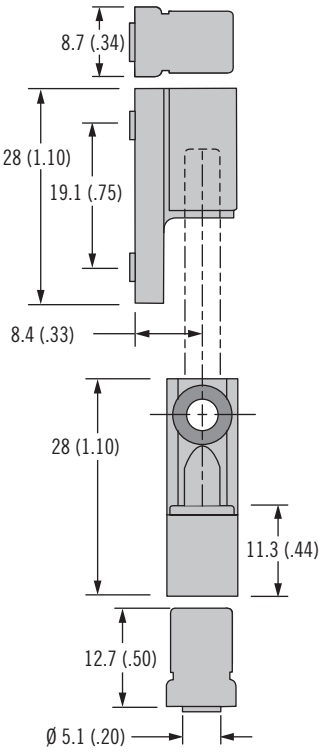

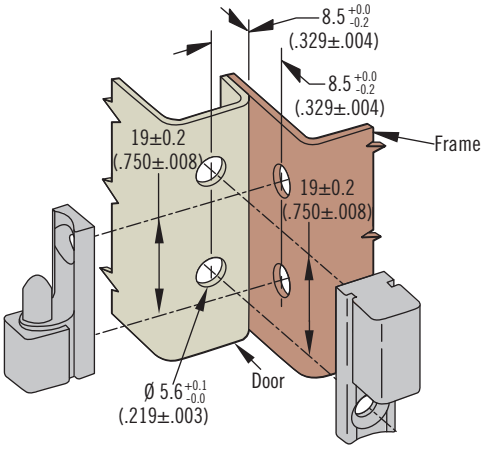

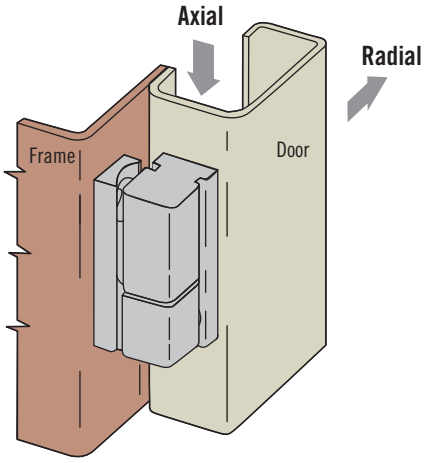

Part Number

See table

Tapped Hole	Part Number
Imperial 6-32	96-110
Metric M4 x 0.7	96-140

Dimensions in millimeters (inch) unless otherwise stated

96 Hinge

Lift-off · Offset · Zinc

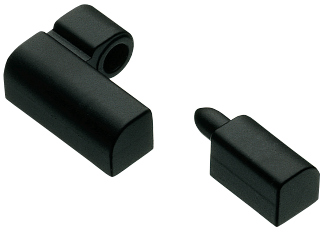

Offset Type A

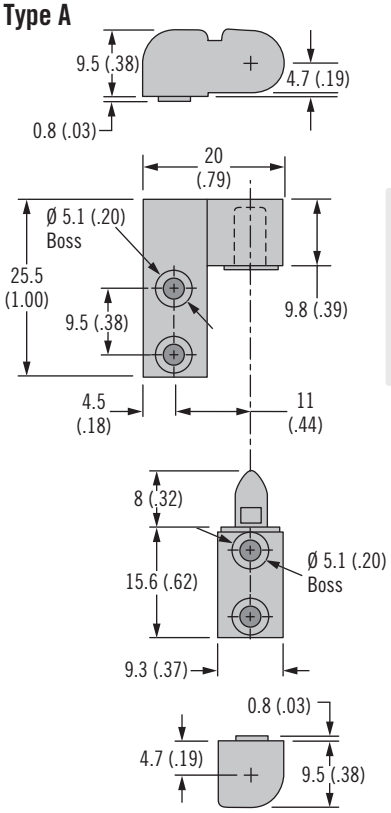

Offset Type B

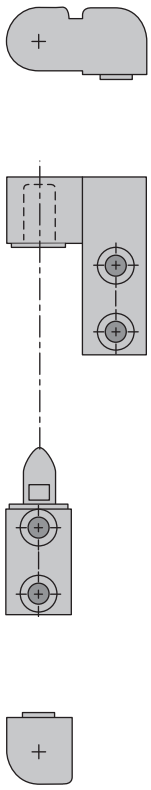

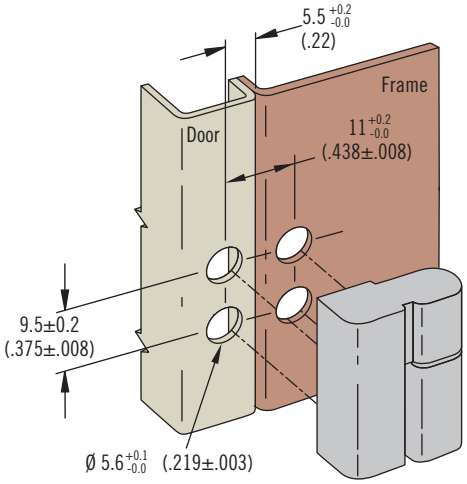

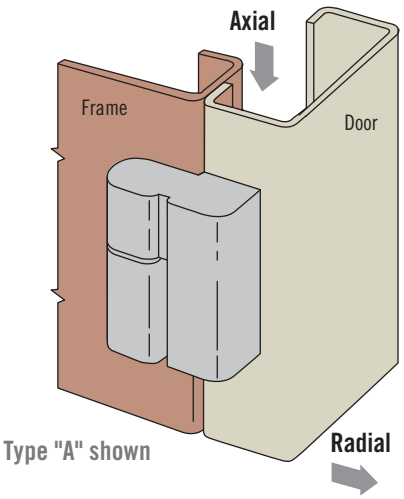

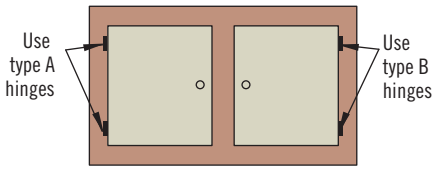

Tapped Hole	Part Number	
	Type A	Type B
Imperial 6-32	96-111	96-112
Metric M4 x 0.7	96-141	96-142

- **Allows for quick, easy door removal**
- **Door can also be permanently installed**

Material and Finish

Zinc alloy, black powder coated

Performance Details

	Radial Load	Axial Load
Maximum static load	1100 N (250 lbf)	1250 N (280 lbf)
Average ultimate load	3300 N (750 lbf)	2600 N (580 lbf)

Installation Notes

Screws not supplied.
Recommended tightening torque for mounting screws:
1.1 N•m (10 in•lbf)

Calculate screw length using the following formula:
Door / frame thickness +5 (.20)

Part Number

See table

EH Hinge

Surface mount

- **Multiple size and mounting options**
- **Concealed mounting hardware**

Material and Finish

Leaf: Zinc alloy black powder coated, chrome plated or nylon black
Pin: Stainless steel
Thread studs: Steel, zinc plated

Performance Details

Size	Radial Load	Axial Load
40 Zinc	1330 N (298 lbf)	2220N (500 lbf)
50 Zinc	2140 N (481 lbf)	3560 N (800 lbf)
50 Nylon	890 N (200 lbf)	1230N (276 lbf)
60 Zinc	1400 N (315 lbf)	3000N (675 lbf)

Installation Notes

Countersunk version:
40 Size M5 (No. 10) CSK screw
50 Size M6 (No. 1/4 - 20)
CSK screw (not supplied)
60 Size M8 (5/16-18)
CSK screw (not supplied)

Threadstud version:
40 Size M5 nuts (not supplied)
50 Size M6 nuts (not supplied)
60 Size M8 nuts (not supplied)

Part Number

See table

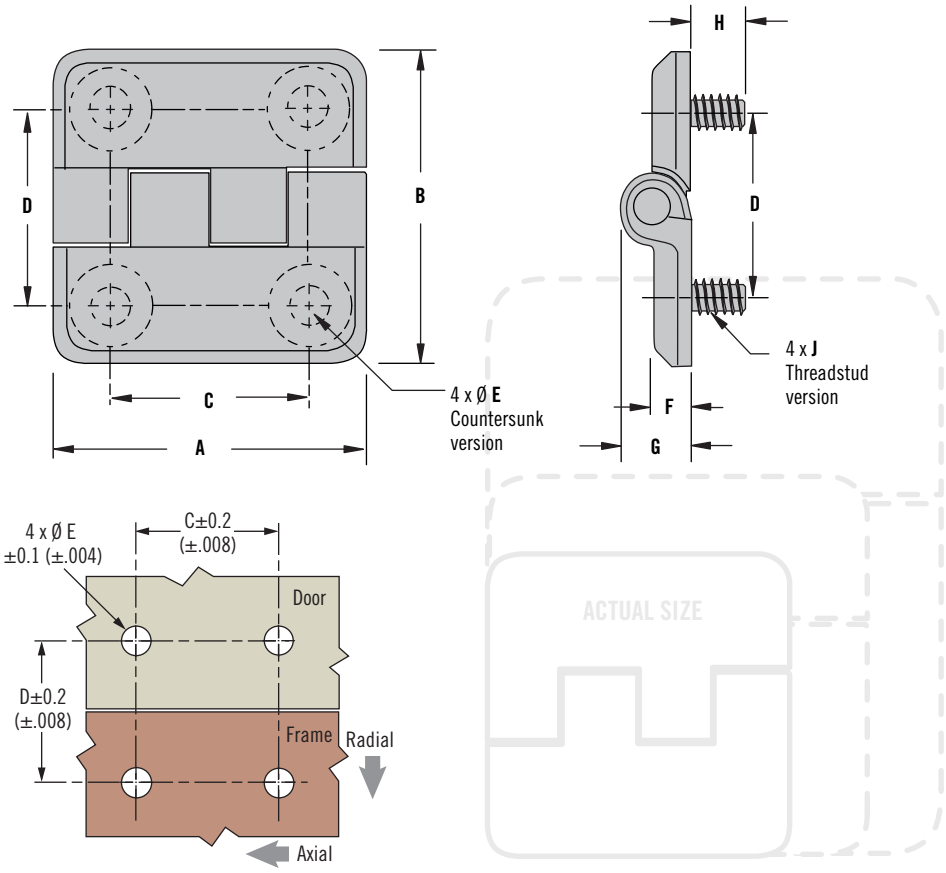

A	B	Thread Stud Part Number			C	D	F	G	H	Thread stud J
		Zinc chrome	Zinc black	Nylon black						
40 (1.57)		EH-5A-4G4-38	EH-5A-4G4-50	~	25 (.984)		5 (.20)	9 (.35)	8.5 (.35)	M5
50 (1.97)		EH-6A-5G5-38	EH-6A-5G5-50	EH-6A-5G5-20	30 (1.181)		6 (.24)	11 (.43)	8 (.31)	M6
60 (2.36)	60 (2.36)	~	EH-7A-6G6-50	~	36 (1.42)	36 (1.42)	8 (.31)	15.4 (.60)	13	M8
60 (2.36)	90 (3.54)	~	EH-7E-6G9-50	~	36 (1.42)	63 (2.20)	8 (.31)	15.4 (.60)	13	M8
60 (2.36)	120 (4.72)	~	EH-7A-6G12-50	~	36 (1.42)	90 (3.54)	8 (.31)	15.4 (.60)	13	M8

A	B	Countersunk Thru-Hole Part Number			C	D	Ø E	F	G
		Zinc chrome	Zinc black	Nylon black					
40 (1.57)		EH-5A-4V4-38	EH-5A-4V4-50	~	25 (.984)		5.4 (.213)	5 (.20)	9 (.35)
50 (1.97)		EH-6A-5V5-38	EH-6A-5V5-50	EH-6A-5V5-20	30 (1.181)		6.4 (.252)	6 (.24)	11 (.43)
60 (2.36)	60 (2.36)	~	EH-7A-6V6-50	~	36 (1.42)	36 (1.42)	8.5 (.33)	8 (.31)	15.4
60 (2.36)	76 (3)	EH-7A-6V8-38	EH-7A-6V8-50	~	36 (1.42)	56 (2.20)	6.4 (.252)	8 (.31)	15 (.59)
60 (2.36)	90 (3.54)	~	EH-7E-6V9-50	~	36 (1.42)	63 (2.20)	8.5 (.33)	8 (.31)	15.4
60 (2.36)	120 (4.72)	~	EH-7A-6V12-50	~	36 (1.42)	90 (3.54)	8.5 (.33)	8 (.31)	15.4

Dimensions in millimeters (inch) unless otherwise stated

EH Hinge
Surface mount

- Multiple sizes and mounting options
- Corrosion resistant exterior
- Allows 180 degree opening

Material and Finish
Nylon, black, stainless steel pin, zinc plated steel insert nuts and threadstuds

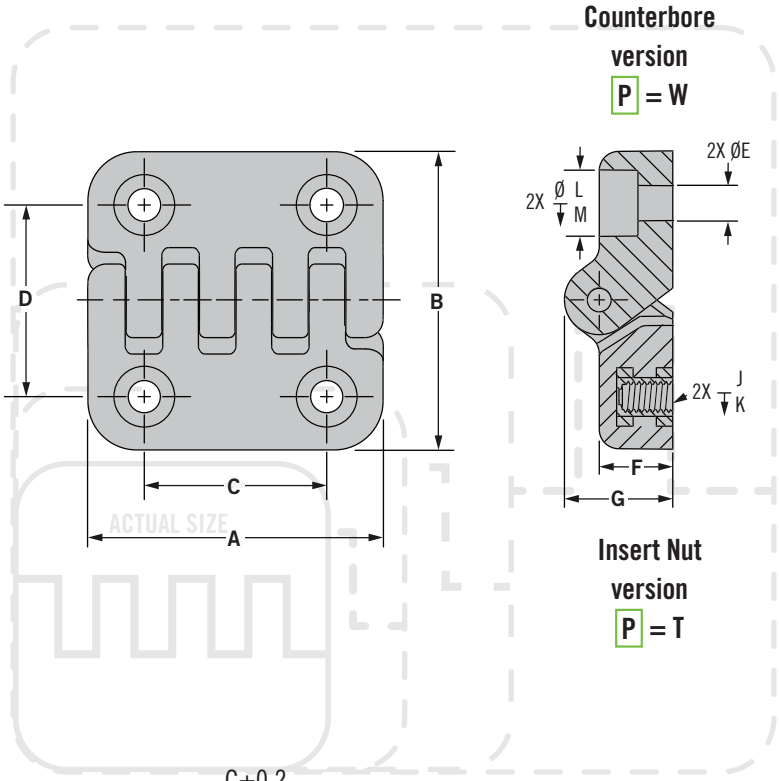

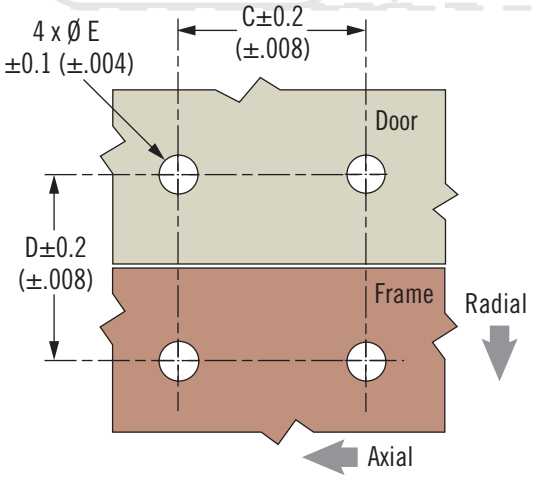

P Leaf Types	
G	Threadstud
T	Insert Nut
V	Countersunk
W	Counterbore
Combination Leaf Types	
GT	Stud + Nut
GV	Stud + Countersink
GW	Stud + Counterbore
TV	Nut + Countersink
TW	Nut + Counterbore

Part Number
See table

Example Part Number: EH-7B-6V6-20
65mm size with both leaves countersunk

Part Number	Axial Length	Radial Length	Through hole								Threadstud / Nut Insert		
P	A	B	C	D	ØE	F	G	ØL	M	ØN	H	J	K
EH-5B-4 P 4-20	40 (1.57)	39 (1.54)	25 (.98)	25 (.98)	4.4 (.17)	9.5 (.37)	14 (.55)	8.5 (.33)	5 (.20)	8.5 (.33)	10 (.39)	M4	6.5 (.26)
EH-6B-5 P 5-20	50 (1.97)	48 (1.89)	30 (1.18)	31 (1.22)	5.4 (.21)	11 (.43)	19 (.75)	10 (.39)	5.5 (.22)	10 (.39)	14 (.55)	M5	7.5 (.30)
EH-7B-6 P 6-20	65 (2.56)	64 (2.52)	40 (1.57)	40 (1.57)	6.4 (.25)	13.5 (.53)	23 (.91)	11 (.43)	6.5 (.26)	12.5 (.49)	18 (.71)	M6	9 (.35)
EH-12B-10 P 10-20	97 (3.82)	98 (3.86)	59.5 (2.34)	62.5 (2.46)	10.4 (.41)	20.5 (.81)	35 (1.38)	17 (.67)	10.5 (.41)	20 (.79)	20 (.79)	M10	15 (.59)

EH Hinge

Surface Mount

- **Allows 180 degree opening**
- **Adjustable mounting**
- **Ideal for larger doors**

Material and Finish

Leaves: Aluminum alloy, black paint
Pin: Stainless steel

Performance Details

Radial load:
Max. static load: 9945N (2236lbf)
Axial load:
Max. static load: 3062N (688lbf)

Installation Notes

Counterbore version:
M5 (No. 10) pan head screws (not supplied)
Countersunk version:
M5 (No.10) flat head screws (not supplied)

Part Number

See table

Counterbore Thru-Holes

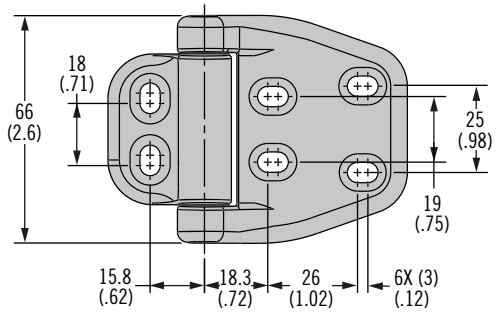

Countersunk Thru-Holes

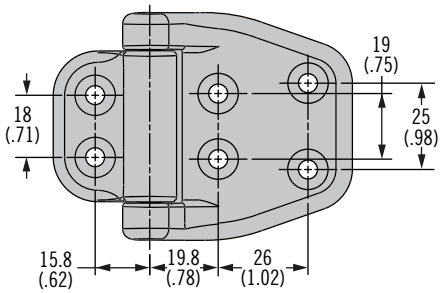

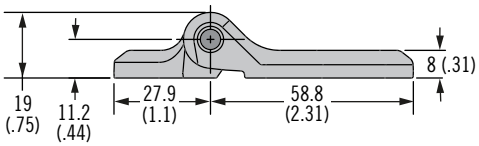

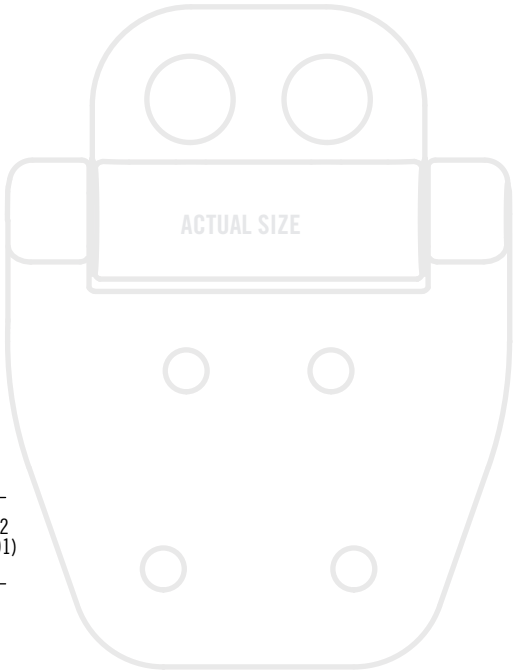

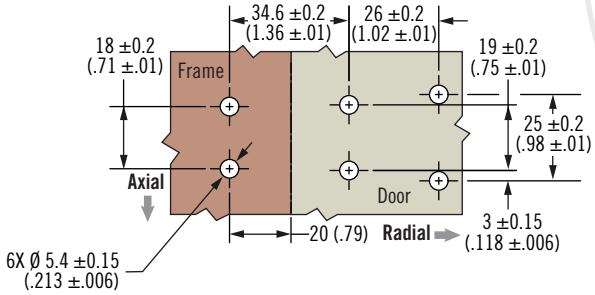

Part Number	
Counterbore Thru-Hole	EH-8C-6W8-82
Countersunk Thru-Hole	EH-8C-6V8-82

Dimensions in millimeters (inch) unless otherwise stated

EH Hinge

Surface mount · Offset

Hinge

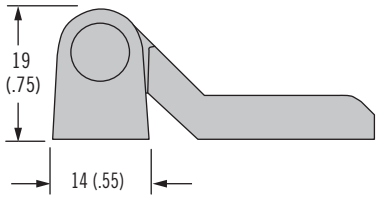

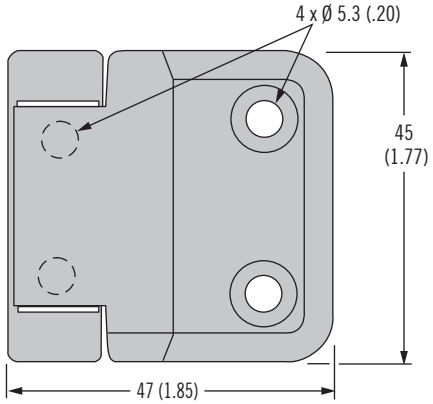

Spacer

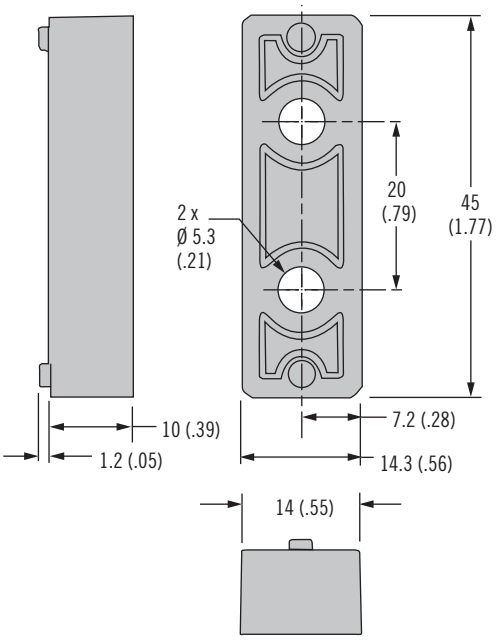

Standard Flush Mount

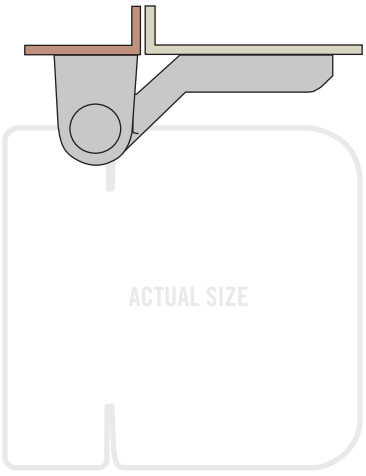

Offset Mount with Spacer

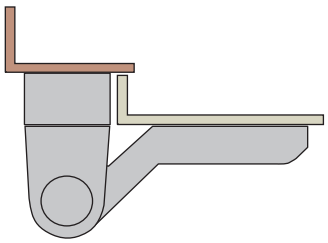

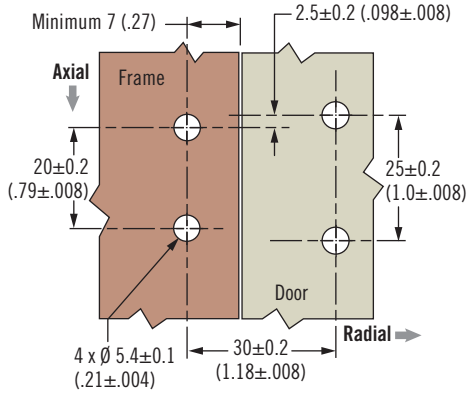

Finish	Part Number	
	Hinge	Spacer
Chrome	EH-6C-5V4-38	EH-6C-B-38
Black	EH-6C-5V4-50	EH-6C-B-50

- **Allows 180 degree opening**
- **Offset pivot maximizes cabinet access**
- **Ideal for closely spaced enclosures**

Material and Finish

Zinc alloy, black powder coated or bright chrome plated
Pin: Stainless steel

Product Strength Guidelines

Radial load:
Maximum static load:
2670 N (600 lbf)

Axial load:
Maximum static load:
2670 N (600 lbf)

Installation Notes

Screws not supplied.
Attach hinge with M5 (No. 10) CSK

Part Number

See table

N6 Hinge

Surface mount · 304 or 316 Stainless Steel

- **Stamped hinge construction**
- **High gloss finish option**
- **Covered hinge option**

Material and Finish

Stainless Steel, passivated or high gloss

Performance Details

Radial load:
Max. static load: 534 N (120 lbf)
Axial load:
Max. static load: 534 N (120 lbf)

Installation Notes

Screws not supplied
Install hinge with M4 (8-32) CSK

For optional covers:

Order covers separately.
Clean hinge leaf surface to remove dirt, oil or grease.
Remove backing from pre-applied adhesive. Place cover over leaf.
Press firmly to activate adhesive.

Part Number

Order hinge and optional covers separately

Style 1 (Part Number see table)

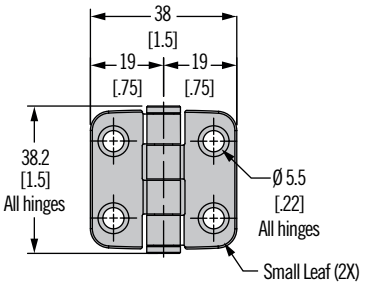

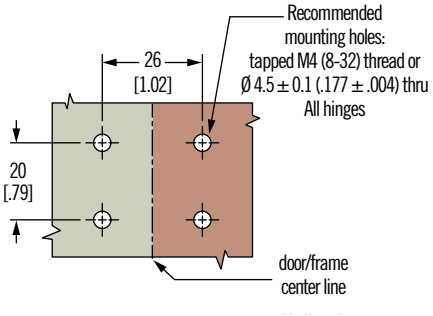

Style 2 (Part Number see table)

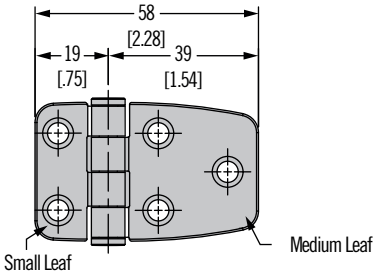

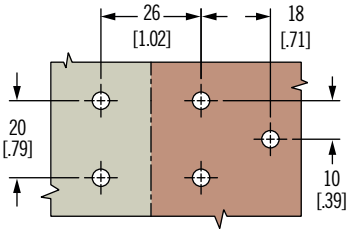

Style 3 (Part Number see table)

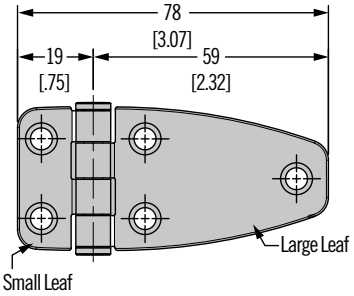

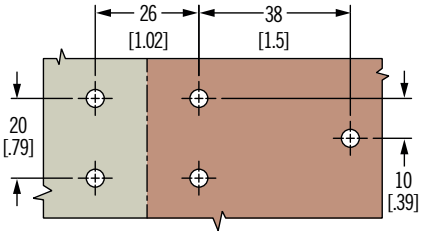

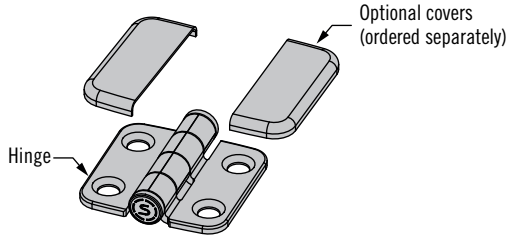

	Part Number				
	304 Stainless Steel, Passivated	316 Stainless Steel, High Gloss			
Style	Hinge	Hinge	Small Leaf Cover	Medium Leaf Cover	Large Leaf Cover
1	N6-4E-422-20	N6-4E-422-24	N6-C-42-24 (2 each)	—	—
2	N6-4E-424-20	N6-4E-424-24	N6-C-42-24	N6-C-44-24	—
3	N6-4E-426-20	N6-4E-426-24	N6-C-42-24	—	N6-C-46-24
4	N6-4E-444-20	N6-4E-444-24	—	N6-C-44-24 (2 each)	—
5	N6-4E-446-20	N6-4E-446-24	—	N6-C-44-24	N6-C-46-24
6	N6-4E-466-20	N6-4E-466-24	—	—	N6-C-46-24 (2 each)

Dimensions in millimeters (inch) unless otherwise stated

N6 Hinge

Surface mount · 304 or 316 Stainless Steel

Style 4 (Part Number see table)

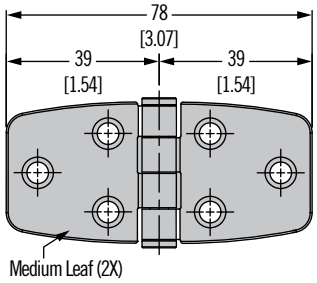

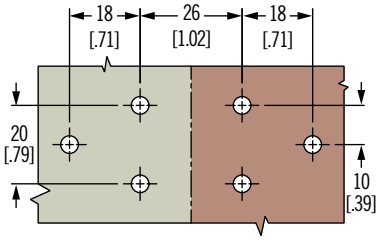

Style 5 (Part Number see table)

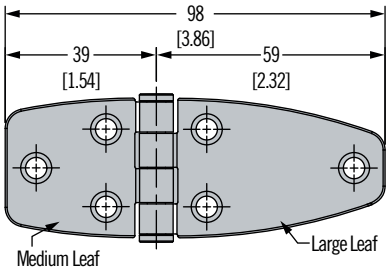

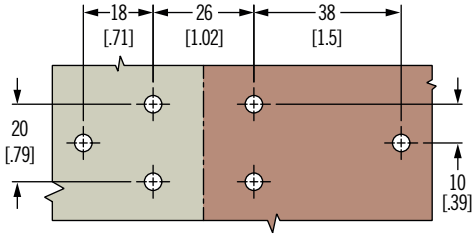

Style 6 (Part Number see table)

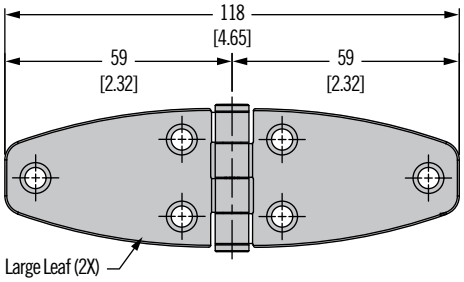

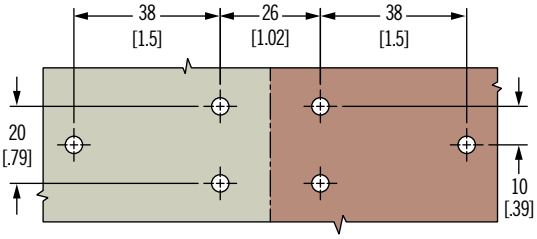

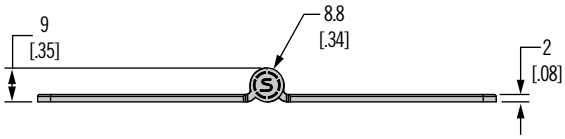

Optional covers ordered separately

For use with small leaf: part number N6-C-42-24

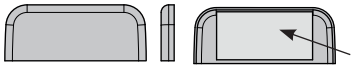

For use with medium leaf: part number N6-C-44-24

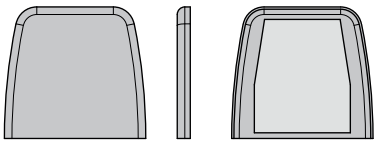

For use with large leaf: part number N6-C-46-24

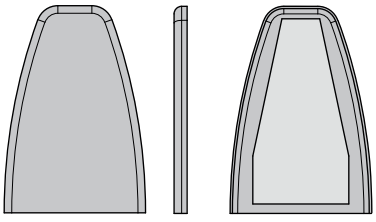

F6 Hinge

Removable style · Concealed

- **Hinge and hardware are concealed**
- **Allows for quick easy door removal**
- **Three styles**

Material and Finish

Steel, zinc plated, or stainless steel

Performance Details

Steel
Radial load:
Maximum static load: 300 N (65 lbf)
Axial load:
Maximum static load:
500 N (112 lbf)

Stainless Steel
Radial load:
Maximum static load: 300 N (65 lbf)
Axial load:
Maximum static load:
800 N (180 lbf)

Installation Notes

1. Select frame and door leaf separately for bulk packaging.
2. Select assembly for individual packaging (consists of 1 frame leaf and door leaf per bag)

Screws not supplied.
Use M5 (No. 10) hardware

Machine screws are recommended for mounting frame leaf

Part Number

See table

Frame Leaf

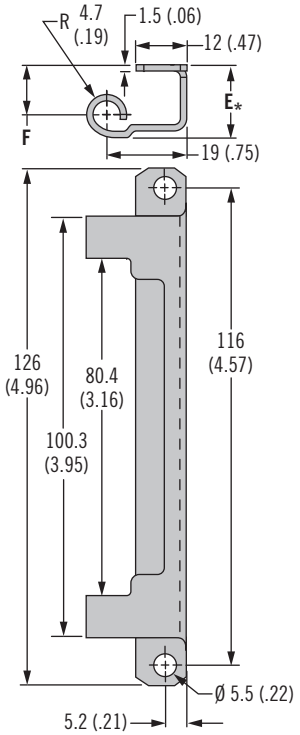

Door Leaf

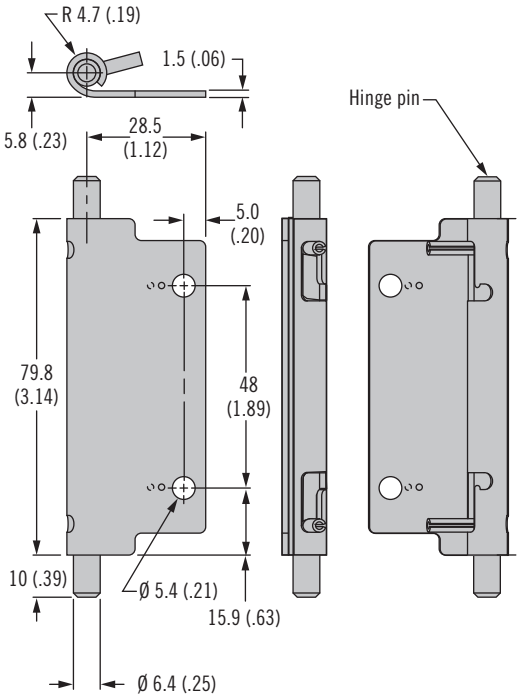

Frame Leaf Part Number				
Series	E	F	Steel	Stainless Steel
1	17 (.67)	11.8 (.47)	F6-901	F6-901-1
2	20 (.79)	14.8 (.58)	F6-902	F6-902-1
3	23.4 (.92)	18.2 (.72)	F6-903	F6-903-1

Door Leaf Part Number		
Door Leaf	Steel	Stainless Steel
	F6-940	F6-940-1

Assembly

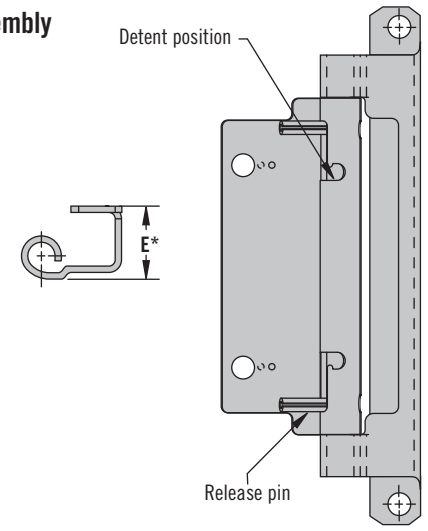

Part Number Assembled				
Assembly			Steel	Stainless Steel
Series	E	F		
1	17 (.67)	11.8 (.47)	F6-1	F6-1-1
2	20 (.79)	14.8 (.58)	F6-2	F6-2-1
3	23.4 (.92)	18.2 (.72)	F6-3	F6-3-1

Dimensions in millimeters (inch) unless otherwise stated

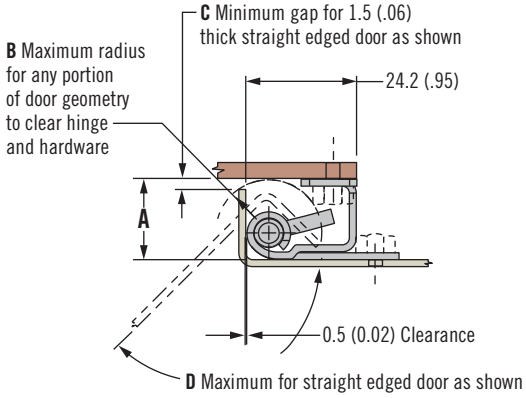

Hinges may be fastened to door and frame by:

- M5 (No. 10) hardware. Machine screws are recommended for mounting frame leaf.
- *Hex jam nuts. Verify clearance with door edge. Depending on jam nut orientation, full rotation may be obstructed.
- Welding.

Series	Panel Preparations Dimensions			
	A	B	C	D
1	17.6 (.69)	10.9 (.43)	3.2 (.13)	132°
2	20.6 (.81)	12.7 (.50)	3.9 (.15)	125°
3	24 (.95)	15.3 (.60)	4.4 (.17)	118°

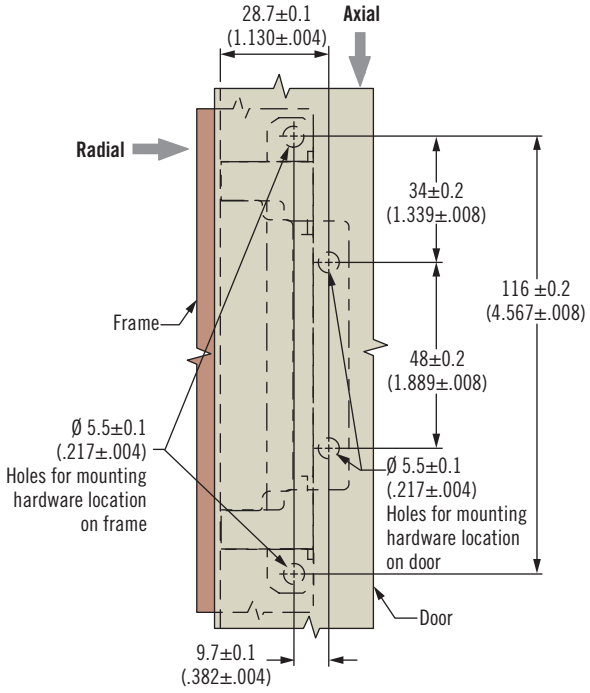

Additional Mounting Options

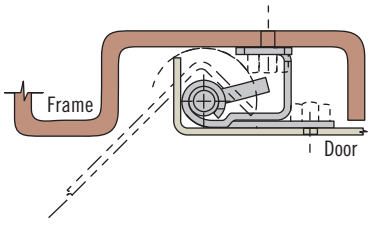

Notes

Mounting:

* Select the frame leaf with a value of **E** best suited to the configuration of your door. The dimension **E** + 0.6 (.02) = the distance from the outside surface of your frame to the inside surface of your door.

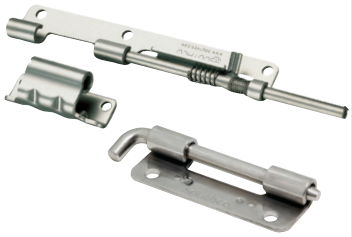

F6 Hinge

Removable style · Concealed · Heavy-duty

- **High strength and durability**
- **Allows door removal without using tools**
- **Retractable pin version resists vibration and prevents pin loss**

Material and Finish

Steel, zinc plated or stainless steel, natural

Performance Details

Steel
Radial load:
Maximum static load:
1000 N (225 lbf)
Average ultimate load:
2100 N (472 lbf)

Axial load:
Maximum static load:
2900 N (650 lbf)
Average ultimate load:
4900 N (1100 lbf)

Stainless Steel
Radial load:
Maximum static load:
1300 N (292 lbf)
Average ultimate load:
2800 N (629 lbf)

Axial load:
Maximum static load:
3600 N (809 lbf)
Average ultimate load:
6000 N (1350 lbf)

Operating temperature range:
-40° C (-40° F) to 85° C (185° F)

Part Number

See table

Door Leaf

Removable Pin Style

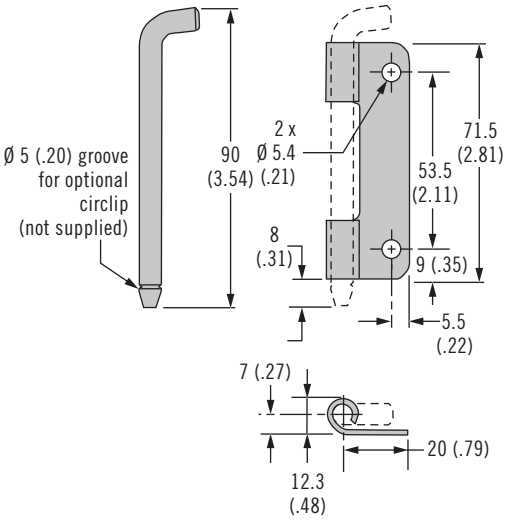

Part Number		
Styles	Material	
	Steel	Stainless steel
Removable pin	F6-946	F6-946-5
Retractable pin type A	~	F6-941-5
Retractable pin type B	~	F6-942-5

Retractable Pin Style

Type A shown, Type B mirror image

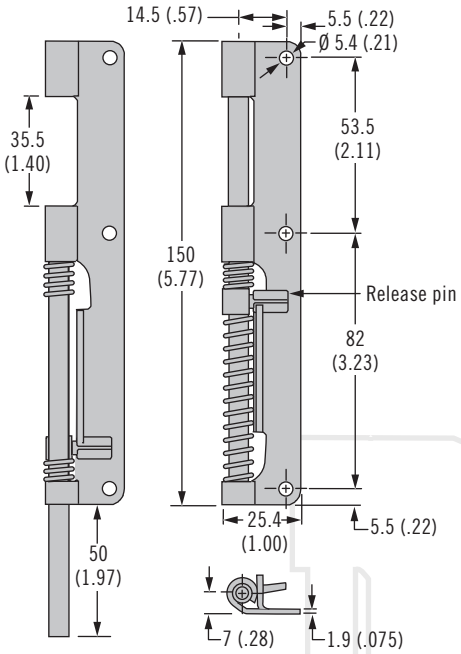

Frame Leaf

Formed Style

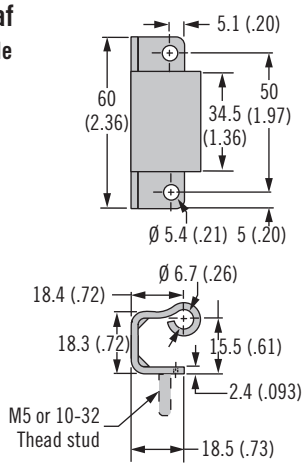

Flat Style

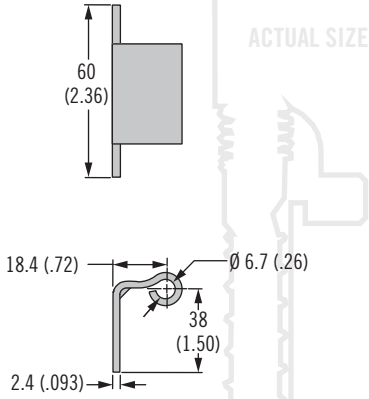

Part Number			
Style	Installation	Material	
		Steel	Stainless steel
Formed	Thru hole	F6-905	F6-905-5
Formed	M5 thread stud	F6-908	F6-908-5
Formed	10-32 thread stud	F6-907	F6-907-5
Flat	Weld	F6-904	F6-904-5

ACTUAL SIZE

Dimensions in millimeters (inch) unless otherwise stated

Formed Frame Leaf

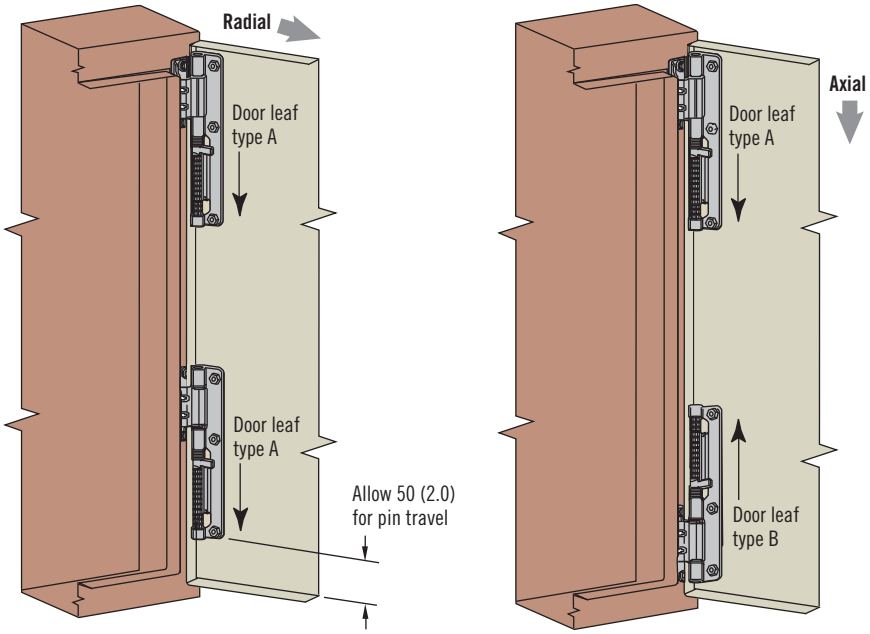

Installation

Typical door and frame installation using formed frame leaf

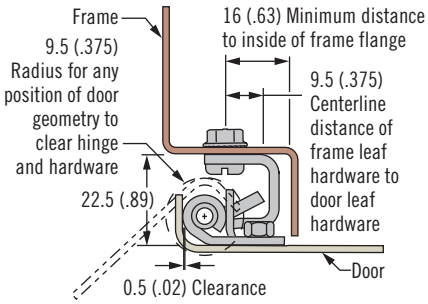

Typical door and frame installation using flat frame leaf

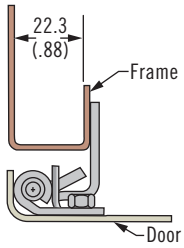

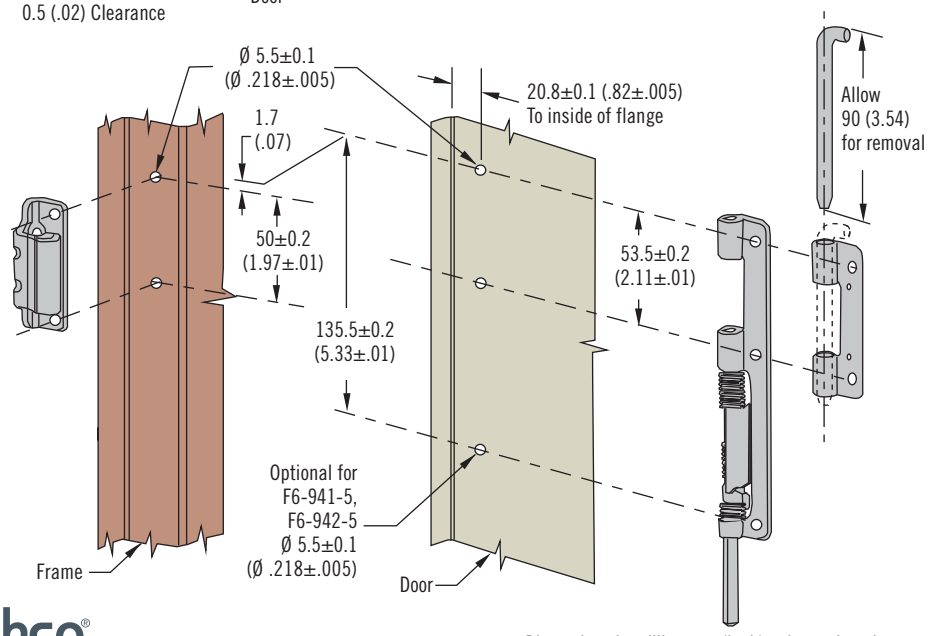

Installation Notes

Order separately 1 door leaf and 1 frame leaf for a complete assembly

Screws not supplied.
Hinge Leaves may be fastened to the door and the frame by: M5 (No. 10) hardware (machine screws are recommended) or by welding.

F6 Hinge

Door removal

Material and Finish

Steel, zinc plated or stainless steel

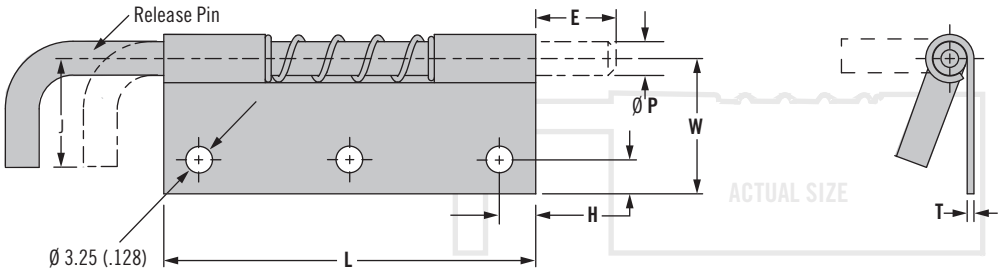

S Size	L	E	H	J	P	T	W
3 - 4	22.2 (.88)	4 (.16)	4.0 (.16)	10 (.39)	3.2 (.13)	0.8 (.03)	13 (.50)
7 - 8	34.9 (1.38)	6.4 (.25)	4.8 (.19)	13 (.50)	4.0 (.16)	1.0 (.04)	19 (.75)
11 - 12	50.8 (2.00)	9.5 (.38)	6.4 (.25)	16 (.63)	4.8 (.19)	1.3 (.05)	22 (.87)
15 - 16	69.9 (2.75)	12.7 (.50)	6.4 (.25)	19 (.75)	6.4 (.25)	1.5 (.06)	25.5 (1.00)

Part Number Selection

M Material and Finish
- **N** Steel, zinc plated
- **S** Stainless steel

S Size
- **3** 22 (0.87) Left Hand
- **4** 22 (0.87) Right Hand
- **7** 35 (1.38) Left Hand
- **8** 35 (1.38) Right Hand
- **11** 51 (2.00) Left Hand
- **12** 51 (2.00) Right Hand
- **15** 70 (2.75) Left Hand
- 16 70 (2.75) Right Hand

F6 - 23 - M S AW

Material and Finish

Steel, zinc plated or stainless steel

Part Number

See table

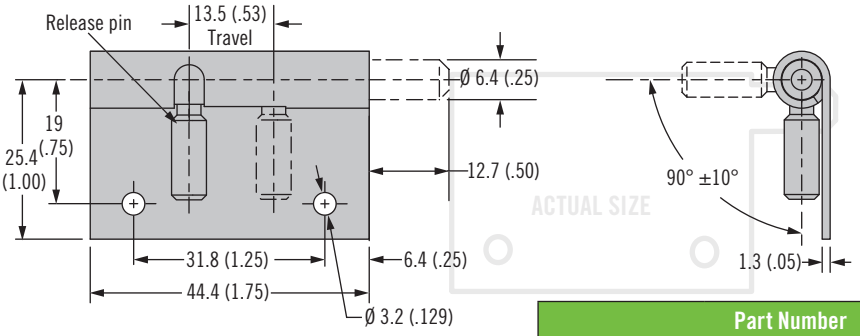

Part Number		
Handling	Steel	Stainless Steel
Right (shown)	F6-20-N1A50WR	F6-20-S1A50WR
Left	F6-20-N1A50WL	F6-20-S1A50WL

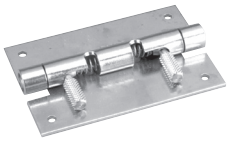

- **Locking feature for simple removal**

Material and Finish

Steel, zinc plated or stainless steel

Part Number

See table

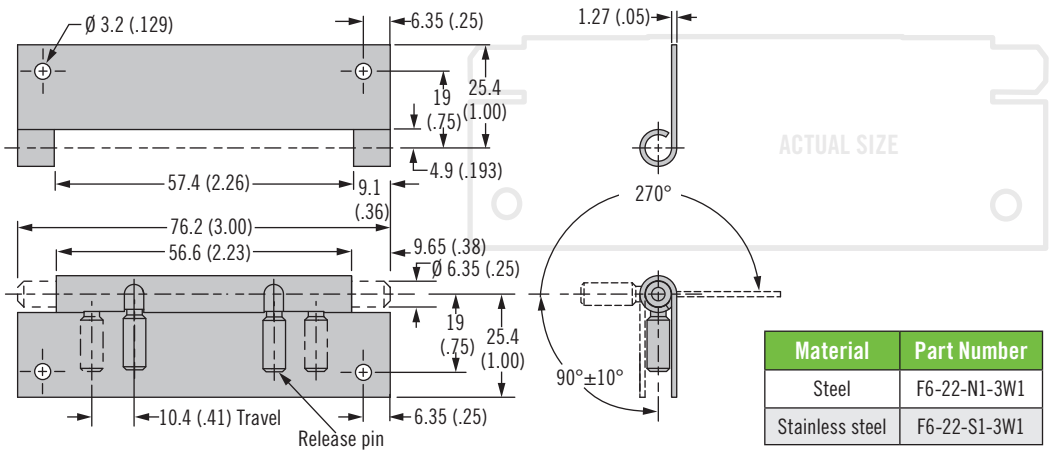

Material	Part Number
Steel	F6-22-N1-3W1
Stainless steel	F6-22-S1-3W1

Dimensions in millimeters (inch) unless otherwise stated

R6 Hinge

Concealed · 90° Opening

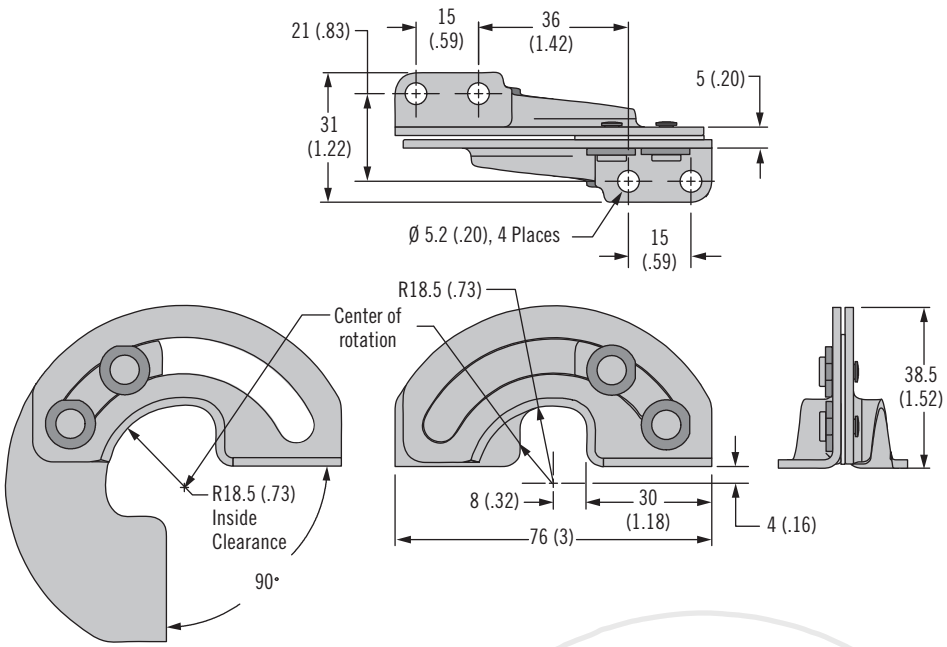

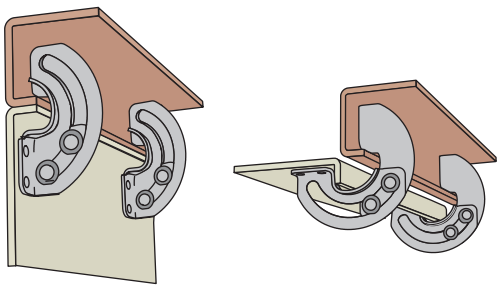

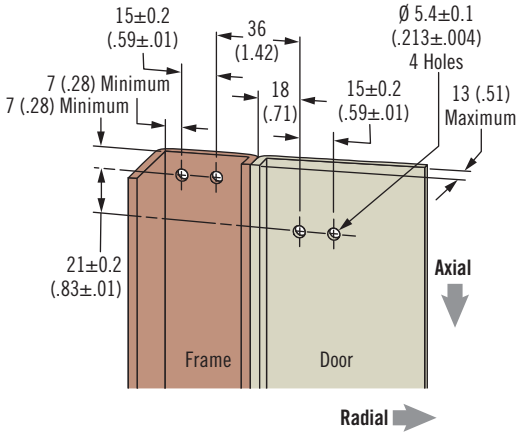

Part Number	
Steel	R6-21-11
Stainless steel	R6-21-23

- **Invisible when door is closed**

Material and Finish

Steel, zinc plated, or stainless steel

Performance Details

Zinc Plated Steel
Radial load:
Maximum static load:
625 N (140 lbf)
Average ultimate load:
2235 N (502 lbf)

Axial load:
Maximum static load: 205 N (46 lbf)
Average ultimate load:
420 N (94 lbf)

Stainless Steel
Radial load:
Maximum static load:
525 N (118 lbf)
Average ultimate load:
3035 N (682 lbf)

Axial load:
Maximum static load: 185 N (42 lbf)
Average ultimate load:
475 N (107 lbf)
Maximum holding torque:
18.2 N•m (161 in•lbf)

Operating temperature range:
-40° C (-40° F) to 85° C (185° F)

Installation Notes

Panel thickness exceeding 4 (.16) will require a 45° chamfer on both door and frame.

Screws not supplied.
Install using M5 (No. 10)

Part Number

See table

R6 Hinge

Concealed · 180º Opening

- **Invisible when door is closed**
- **Door-stay for horizontal door & lid applications**
- **Corrosion-resistant materials available**

Material and Finish

Steel, zinc plated, or stainless steel

Performance Details

Zinc Plated Steel
Radial load:
Maximum static load:
485 N (109 lbf)
Average ultimate load:
710 N (160 lbf)

Axial load:
Maximum static load: 100 N (23 lbf)
Average ultimate load:
295 N (66 lbf)

Maximum holding torque:
11.8 N•m (104 in•lbf)

Stainless Steel
Radial load:
Maximum static load:
505 N (114 lbf)
Average ultimate load:
1085 N (244 lbf)

Axial load:
Maximum static load: 165 N (37 lbf)
Average ultimate load:
345 N (78 lbf)

Operating temperature range:
-40º C (-40º F) to 85º C (185º F)

Installation Notes

Screws not supplied.
Install using M5 (No. 10) screws or by welding.

Maximum panel thickness is
4 (.16)

Part Number

See table

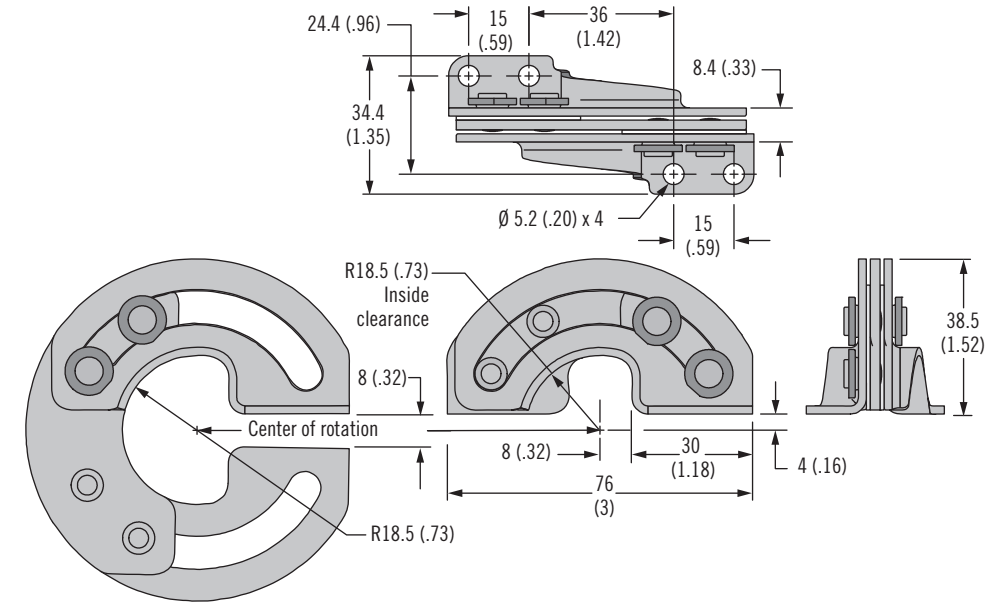

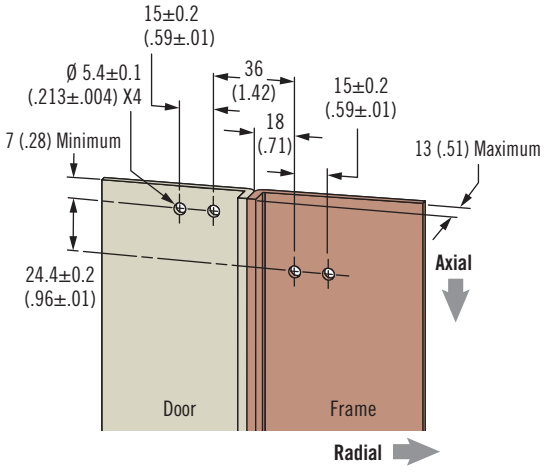

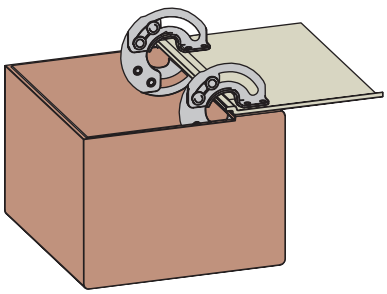

Part Number	
Steel	R6-20-11
Stainless steel	R6-20-23

Dimensions in millimeters (inch) unless otherwise stated

R6 Hinge

Concealed · Hold-open style

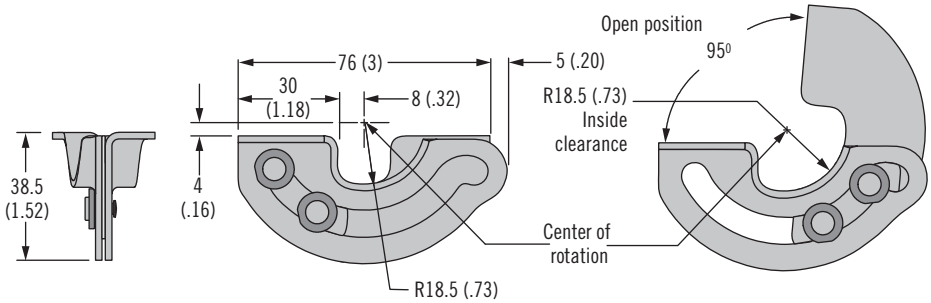

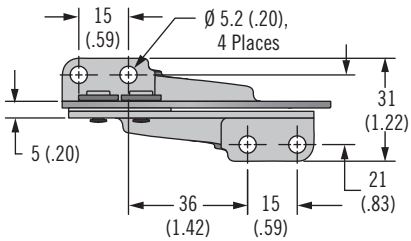

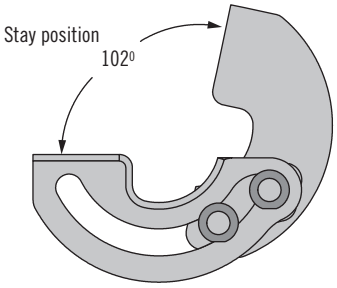

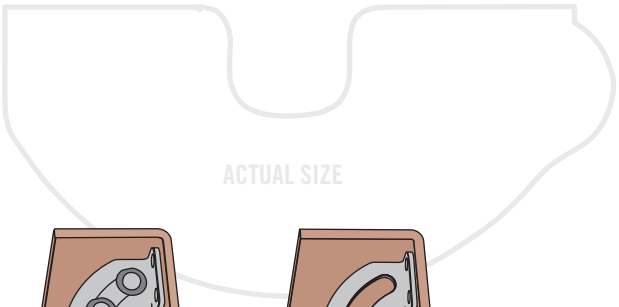

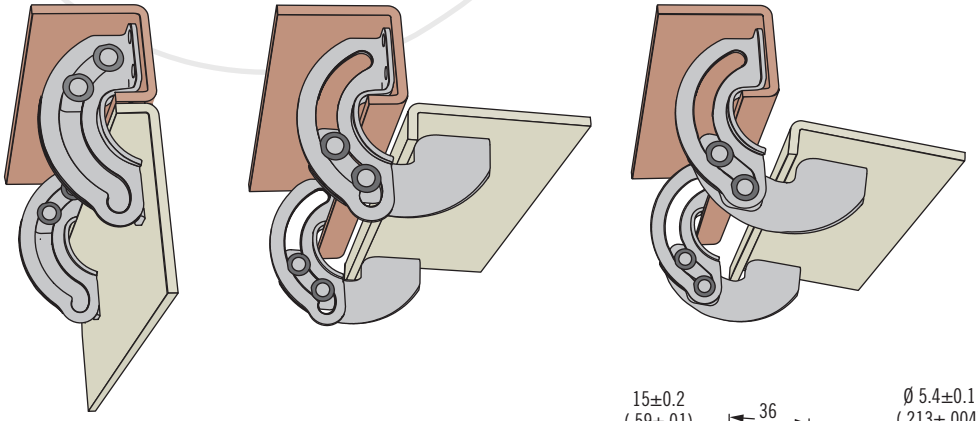

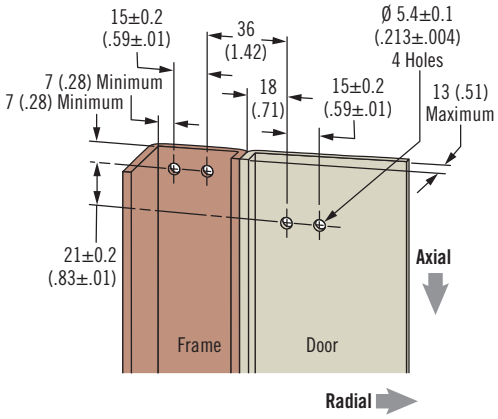

Part Number	
Steel	R6-22-11
Stainless steel	R6-22-23

- **Invisible when door is closed**
- **Holds doors open without secondary mechanical support**

Material and Finish

Steel, zinc plated, or stainless steel

Performance Details

*(loads applied with hinge in stay position)

Zinc Plated Steel
Radial load:
Maximum static load: 155 N (35 lbf)
Average ultimate load: 405 N (91 lbf)

Axial load:
Maximum static load: 200 N (45 lbf)
Average ultimate load: 415 N (93 lbf)

Maximum holding torque:
11.8 N•m (104 in•lbf)

Operating temperature range:
-40°C (-40°F) to 85°C (185°F)

Stainless Steel
Radial load:
Maximum static load: 280 N (63 lbf)
Average ultimate load:
570 N (128 lbf)*

Axial load:
Maximum static load: 305 N (69 lbf)
Average ultimate load:
430 N (97 lbf)

Maximum holding torque:
18.2 N•m (161 in•lbf)*

Operating temperature range:
-40° C (-40° F) to 85° C (185° F)

Installation Notes

Panel thickness exceeding 4 (.16) will require a 45˚ chamfer on both door and frame.

Part Number

See table

DZUS® QUARTER-TURN & QUICK ACCESS FASTENERS

DZUS® Quarter-Turn Fasteners

DZUS® Quarter-Turn Fasteners

Southco offers an extensive selection of *DZUS*® Quarter-Turn Fasteners to satisfy a broad range of requirements for quick access, high strength, and economical performance. Each product line comes with its own set of matched receptacles for accurate, secure engagement and convenient mounting in a range of applications.

The *DZUS*® advantage

- Low installation cost
- Fast, repeatable access
- Lower assembly cost
- Faster service calls
- Better ergonomics
- Improved aesthetics

PANEX Quarter-Turn Design

- Bail and wing design
- Snap-on, ergonomic bail covers
- Available in bright, black and chrome finishes

.....and more is on the way.

For the latest updates and additions to all of Southco's quick access products go to www.southco.com/dzus

Southco offers several fastener designs to assist in panel fastening and positioning applications

- Plungers provide quick installation and removal of components and can serve as a quick-release retractable hinge for removable doors
- Swell latches allow for quick and easy access, with convenient single-hole mounting, plus latch and handle in one assembly
- TL slide latches resist opening under vibration and shock loads

Quick Access Fasteners

Pages 500 - 509

D7

NY

56

56

TL

19

19

DZUS® Quarter-Turn Fasteners

System selection guide

Typical assembly

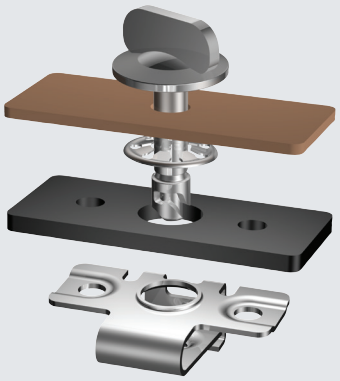

Notes

TMT measures total material thickness (TMT) of the application. Tolerance in this measurement must be below the figure given in the selection table.

Available on request. Requires a modification request to Southco Engineering. Please contact your local Southco representative or send us an email to info@southco.com

www.southco.com/DZUS

	DZUS® Quarter-Turn Systems		TMT Tolerance	Cycle Life	Tensile Load	Vibration Resistance	Stainless Steel Available
	Determine the best quick access fastening system for your application		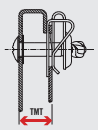	Guidelines: Moderate = 500-2000 High = 2000 +	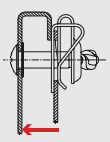	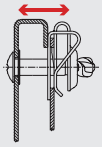	
QUARTER-TURN FASTENERS	**82 and 85 Lion** • High strength • High cycle life • Variety of styles		0.5 (.020)	High	High	Moderate	✔
	D8 *PANEX* Fasteners • Grip tolerant • Moderate cycle life • Variety of styles		0.9 (.035)	Moderate	Medium	Moderate	
	D9 Tech Line • Captive to outer panel • Moderate cycle life • Variety of style		0.23 (.009)	Moderate	Medium	Moderate	N/A
	D1 Dart • Plastic design • Light-weight • New Wing design		1.2 (.049)	High	Low	Moderate	N/A
	D4 Standard • High clamp force • High strength • Vibration resistant		0.6 (.024)	Moderate	High	High	✔
	D5 Panel Line • Captive to outer panel • Vibration resistant • Visual latched indication		0.23 (.009)	Moderate	High	High	N/A
	D7 Pilot • Push-to-close • Vibration resistant • Quarter-turn-to-open		2.4 (.98)	High	Medium	Moderate	
	D7 Arrow • Push-to-close • Quarter-turn-to-open • Light-duty		3.1 (.12)	High	Low	Moderate	N/A
	NY Q-Latch • Turn to close • Snap-in installation • Quarter-turn-to-open		2.26 (.089)	High	Low	Moderate	N/A
	NY Nylatch • Push-to-close • Snap-in installation • Pull-to-open		2.5 (.097)	High	Low	Moderate	N/A

	Receptacle Type - Check Below Availability and Recommended Panel Configuration													
	Determine frame type and select receptacle	Clip-On	Self-Clinching	Snap-In	Front Load Clip-In	Blind Press-In	Ultrasonic	Rivet-On	Weld-On	Side Mount	Vibration Isolating	Heavy Duty S-Spring	Flaring Assembly	Strip
QUARTER-TURN FASTENERS	82, 85 Lion	✔	✔	✔		✔	✔	✔	✔	✔	✔			
	D8 *PANEX* Fasteners	✔	✔	✔	✔	✔	✔	✔	✔	✔				
	D9 Tech Line		✔					✔						
	D1 Dart	✔		✔				✔						
	D4 Standard	✔		✔				✔	✔			✔		
	D5 Panel Line											✔		✔
	D7 Pilot			✔										
	D7 Arrow			✔									✔	
	NY Q-Latch & NY NYLATCH			✔									✔	
FRAME TYPE	Near Edge Installation	✔		✔	✔			✔	✔	✔	✔	✔	✔	✔
	Sheet Metal Installation	✔	✔	✔	✔			✔	✔	✔	✔	✔	✔	✔
	Plastic and Composites	✔		✔	✔	✔	✔	✔		✔	✔	✔	✔	✔
	Blind Holes and Tubular Frames			✔	✔	✔	✔						✔	
	Metal Casting	✔		✔	✔	✔		✔		✔	✔	✔	✔	✔
	High Vibration	✔		✔	✔			✔	✔	✔	✔	✔		✔

DZUS® Quarter-Turn Fasteners

Actuation styles

82
85
D8
D9
D1
D4
D5
D7
NY

DZUS® Online Help

Interactive product guide

- View product animations
- View solutions
- Get detailed product information including CAD models downloaded in your native format

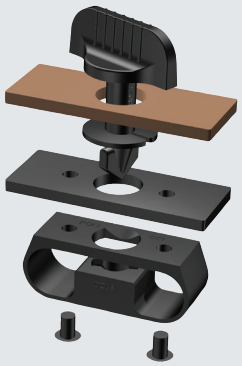

Available on request. Requires a modification request to *SOUTHCO*® Engineering. Please contact your local *SOUTHCO*® representative or send us an email to info@southco.com

www.southco.com/dzus

ACTUATION STYLES		Tool Actuated				Hand Actuated		
Select the actuation style		Slotted Access	Phillips Recess	Hex Recess	Security Recess	Bail Style	Wing Style	Knob Style
QUARTER-TURN FASTENERS	82/85 Lion	✔	✔	✔	✔	✔	✔	✔
	D8 *PANEX* Fasteners	✔	✔	✔	✔	✔	✔	✔
	D9 Tech Line							✔
	D1 Dart	✔		✔			✔	✔
	D4 Standard	✔	✔	✔		✔	✔	
	D5 Panel Line	✔						
	D7 Pilot		✔					✔
	D7 Arrow	✔		✔			✔	✔
	NY Q-Latch	✔					✔	
	D9 Tech Line		✔	✔				✔
	NY NYLATCH							✔

(*DZUS*® specification worksheet)

Use the following worksheet to specify the parts for your *DZUS*® quick access system (Example in blue)

System type: *82 DZUS*® Lion quarter-turn fastener

1. Select receptacle type: Clip-on: 82-47-113-15 page 441

Notes: Stud selection column letter shown will be used to determine stud length in step 4. Ensure the receptacle chosen will accommodate the frame thickness.

2. Select retainer and accessories and note any adjustment values:

Accessories: Cupped washer, black 82-46-101-41 page 443

Retainer: Stainless Steel, 82-32-201-20

Adjustment values:

When using a cupped washer, add 0.5 (.020) to outer panel thickness or total material thickness (TMT).

3. Specify stud length: To determine stud length, first determine the material thickness value, TMT.

Notes: Each receptacle has a unique formula to calculate the value of TMT. Use the formulas given with the receptacle you choose. Add accessory adjustment values to TMT as appropriate.

Select the configuration that best represents the application

Application configuration:	**Type 2 (page 441)**
Outer panel thickness:	**2 (.078)**
Frame thickness:	**2 (.078)**
Gap thickness:	**0 (0)**
Accessory adjustment:	**Add 0.5 (.020) to outer panel (P)**

Configuration Type 2:

Calculate TMT using the formulas given for the receptacle.

Example:

TMT = P + F + 1.4 (.055) + 0.5 (.020) (for cupped washer thickness)

TMT = 2 (.078) + 2 (.078) + 1.4 (.055) + 0.5 (.020) = 5.9 (.232).

4. Finish the stud part number: (page 437)

Head style:	**Wing head**
Material:	**Steel, zinc plated**

Final list of materials:

82 -47-113-15 Receptacle: Steel clip-on
82 -32-201-20 Retainer: Stainless steel
82 -46-101-41 Accessory: Cupped washer, black
82 -12-240-16 Stud: Wing head, K=240, steel, zinc plated

Notes: Ensure final list of materials are from the same product class and size

Choose system (page 432)

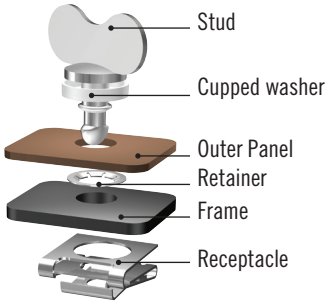

1. Select receptacle type

Clip-on receptacle 82-47-113-15

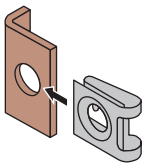

2. Select accessories

Cup washer add 0.5 (.020) to the outer panel thickness (P)
82-46-101-41

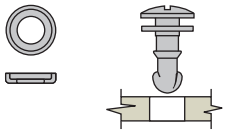

3. Calculate TMT

Type 1

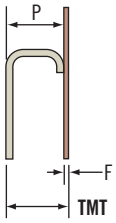

TMT = P + F

Type 2

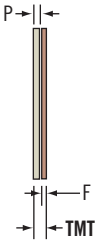

TMT = P + F + 1.4 (.055)

Configuration 2

Stud selection column
D

Use the TMT value to find the correct stud length on the stud selector page.

The correct column of TMT ranges is given on the receptacle page.

D		
TMT Range		K
All other receptacles		
Min.	Max.	
2.3 (.090)	2.8 (.110)	**100**
2.8 (.110)	3.3 (.130)	**120**
3.3 (.130)	3.8 (.150)	**140**
3.8 (.150)	4.3 (.170)	**160**
4.3 (.170)	4.8 (.190)	**180**
4.8 (.190)	5.3 (.210)	**200**
5.3 (.210)	5.8 (.230)	**220**
5.8 (.230)	6.3 (.250)	**240**

Stud: Part Number Selection

H Head style
- 11 Oval slot
- 12 Wing head
- 15 Bail RA
- 16 Bail RB
- 78 Hex recess
- 19 Oval Phillips recess
- T Tool head recess

K Length
Enter number from selection table

82 - H - K - M

M Material
- 16 Steel, zinc plated
- 20 Stainless steel

82 *DZUS*® Performance Quarter-Turn Fasteners

Studs

Material and Finish

Studs: Steel, zinc plated and chromate or stainless steel
Bail cover: ABS, black

Accessories

Tool head recess key:
Part number: 29-90-214-10

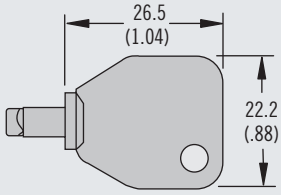

Installation Notes

Bail cover:
A retainer must be fitted under the stud head to fit flush with surface

Retainer part number 82-32-301-12 (see page 443)

H Head Styles - Tool Actuated

Oval Slot | Hex Recess | Oval Recess | Tool Head Recess | Flush Recess

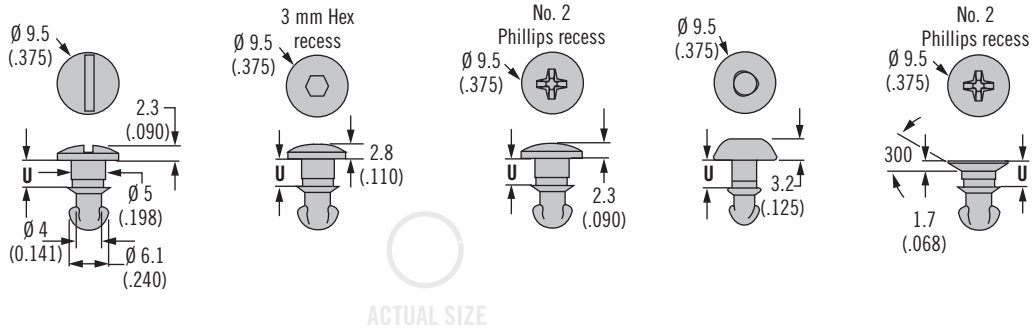

H Head Styles - Hand Actuated

Wing | Bail Style RA | Bail Style RB

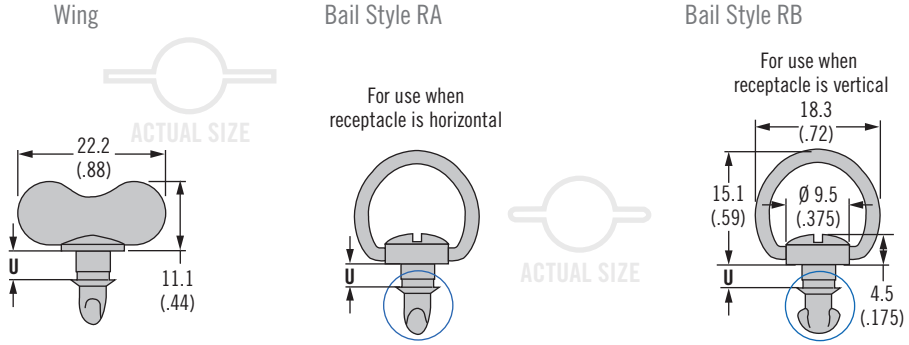

Optional Bail Cover

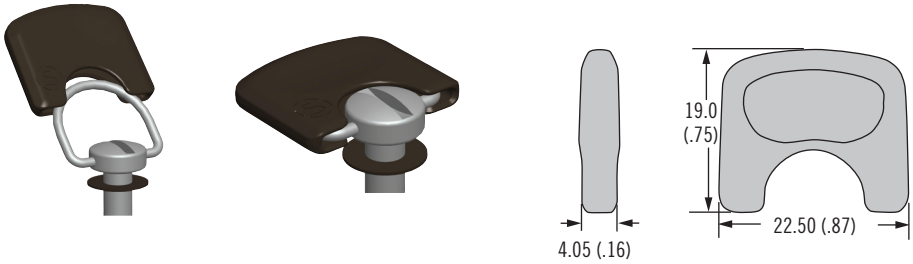

Bail Cover Part Number
82-2-B-000

Stud Panel Preparation

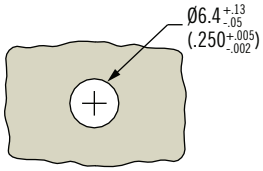

Flush Head Styles

(when outer panel is 1.3 (.050) or greater)

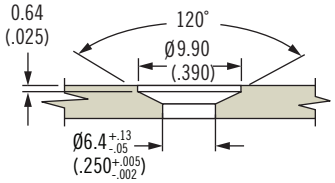

Dimensions in millimeters (inch) unless otherwise stated

82 *DZUS*® Lion Quarter-Turn Fasteners

Stud selection

H Head style
- **11** Oval slot
- **12** Wing head
- **15** Bail RA
- **16** Bail RB
- **19** Oval Phillips recess
- **28** Flush Phillips recess
- **78** Hex recess
- **T** Tool head recess (not available in stainless steel)

82 - H - K - M

K Length
Enter number from selection table below

M Material
- **16** Steel, zinc plated
- **20** Stainless steel (not available in tool head recess head style)

Stud Length Table

A		B		C		D		K	U
TMT Range For: 82-35-306-10		TMT Range For: 82-35-308-55 82-35-310-55		TMT Range For: 82-35-315-55		TMT Range For: All Other Receptacles			
Min.	Max.	Min.	Max.	Min.	Max.	Min.	Max.		
0.7 (.026)	1.2 (.045)	~	~	~	~	2.3 (.090)	2.8 (.110)	**100**	3.2 (.127)
1.2 (.045)	1.7 (.065)	~	~	~	~	2.8 (.110)	3.3 (.130)	**120**	3.7 (.147)
1.7 (.065)	2.2 (.085)	~	~	~	~	3.3 (.130)	3.8 (.150)	**140**	4.2 (.167)
2.2 (.085)	2.7 (.105)	0 (0)	0.5 (.019)	1.3 (.050)	1.8 (.070)	3.8 (.150)	4.3 (.170)	**160**	4.7 (.187)
2.7 (.105)	3.2 (.125)	0.5 (.019)	1 (.039)	1.8 (.070)	2.3 (.090)	4.3 (.170)	4.8 (.190)	**180**	5.3 (.207)
3.2 (.125)	3.7 (.145)	1 (.039)	1.5 (.059)	2.3 (.090)	2.8 (.110)	4.8 (.190)	5.3 (.210)	**200**	5.8 (.227)
3.7 (.145)	4.2 (.165)	1.5 (.059)	2 (.079)	2.8 (.110)	3.3 (.130)	5.3 (.210)	5.8 (.230)	**220**	6.3 (.247)
4.2 (.165)	4.7 (.185)	2 (.079)	2.5 (.099)	3.3 (.130)	3.8 (.150)	5.8 (.230)	6.3 (.250)	**240**	6.8 (.267)
4.7 (.185)	5.2 (.205)	2.5 (.099)	3 (.119)	3.8 (.150)	4.3 (.170)	6.4 (.250)	6.9 (.270)	**260**	7.3 (.287)
5.2 (.205)	5.7 (.225)	3 (.119)	3.5 (.139)	4.3 (.170)	4.8 (.190)	6.9 (.270)	7.4 (.290)	**280**	7.8 (.307)
5.7 (.225)	6.2 (.245)	3.5 (.139)	4.1 (.159)	4.8 (.190)	5.3 (.210)	7.4 (.290)	7.9 (.310)	**300**	8.3 (.327)
~	~	4.1 (.159)	4.6 (.179)	5.3 (.210)	5.8 (.230)	7.9 (.310)	8.4 (.330)	**320**	8.8 (.347)
~	~	4.6 (.179)	5.1 (.199)	5.8 (.230)	6.3 (.250)	8.4 (.330)	8.9 (.350)	**340**	9.3 (.367)
~	~	5.1 (.199)	5.6 (.219)	6.3 (.250)	6.8 (.270)	8.9 (.350)	9.4 (.370)	**360**	9.8 (.387)
~	~	5.6 (.219)	6.1 (.239)	6.8 (.270)	7.3 (.290)	9.4 (.370)	9.9 (.390)	**380**	10.3 (.407)
~	~	6.1 (.239)	6.6 (.259)	7.3 (.290)	7.8 (.310)	9.9 (.390)	10.4 (.410)	**400**	10.8 (.427)
~	~	6.6 (.259)	7.1 (.279)	7.8 (.310)	8.3 (.330)	10.4 (.410)	10.9 (.430)	**420**	11.4 (.447)
~	~	7.1 (.279)	7.6 (.299)	8.3 (.330)	8.8 (.350)	10.9 (.430)	11.4 (.450)	**440**	11.9 (.467)
~	~	7.6 (.299)	8.1 (.319)	8.8 (.350)	9.3 (.370)	11.4 (.450)	11.9 (.470)	**460**	12.4 (.487)
~	~	8.1 (.319)	8.6 (.339)	9.3 (.370)	9.8 (.390)	11.9 (.470)	12.4 (.490)	**480**	12.9 (.507)
~	~	8.6 (.339)	9.1 (.359)	9.8 (.390)	10.3 (.410)	12.5 (.490)	12.9 (.510)	**500**	13.4 (.527)
~	~	9.1 (.359)	9.6 (.379)	10.3 (.410)	10.8 (.430)	13 (.510)	13.5 (.530)	**520**	13.9 (.547)
~	~	9.6 (.379)	10.1 (.399)	10.8 (.430)	11.3 (.450)	13.5 (.530)	14 (.550)	**540**	14.4 (.567)
~	~	10.1 (.399)	10.6 (.419)	11.3 (.450)	11.8 (.470)	14 (.550)	14.5 (.570)	**560**	14.9 (.587)
~	~	10.6 (.419)	11.1 (.439)	11.8 (.470)	12.3 (.490)	14.5 (.570)	15 (.590)	**580**	15.4 (.607)

Part Number Selection

To select correct fastener:

1. Select receptacle
Choose a receptacle from pages 438-442

2. Select retainer and accessories
from page 443 and note any adjustment values

3. Specify stud length
Calculate the total material thickness (TMT) using the formula given for the receptacle selected. Find the range of TMT using the stud length selection table (left) using the column (A, B, C, or D) given for the receptacle selected, find K

4. Complete the stud part number
by specifying the head style H, stud length K, and material M

Example:
For rivet-on with base receptacle 82-35-302-15 use column D
For TMT value calculated as 5.2 (.206), K = 200
For slotted head style in steel material, completed part number: 82-11-200-16
A complete example can be found on page 435

Notes
Stainless steel material may require a higher minimum order quantity. Contact Southco for details.

82 *DZUS*® Lion Quarter-Turn Fasteners

Receptacles

Material and Finish

Steel, zinc immersion coating

Installation Notes

Install with Ø 2.5 (3⁄32) rivets, spring plate must float freely after riveting

Part Number

See table

Notes

Utilize stud selection column indicated when choosing a stud length from the stud length table on page 437

Rivet-On With Base

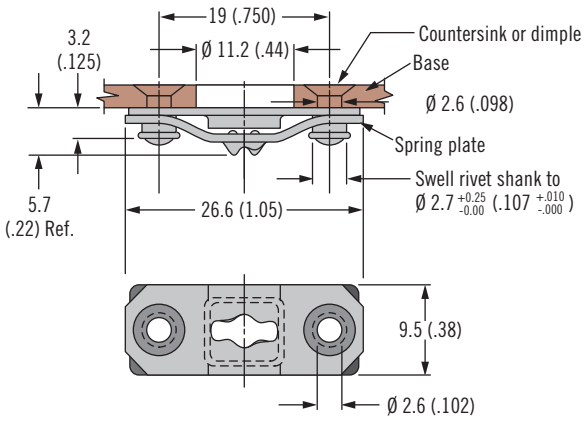

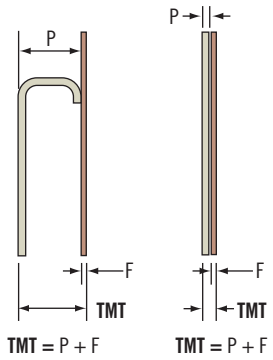

ACTUAL SIZE

Part Number	Stud Selection Column
82-35-302-15	D

Material and Finish

Steel, zinc immersion coating or stainless steel

Installation Notes

Install with Ø 2.5 (3⁄32) rivets, spring plate must float freely after riveting

Part Number

See table

Notes

Utilize stud selection column indicated when choosing a stud length from the stud length table on page 437

Rivet-On Without Base

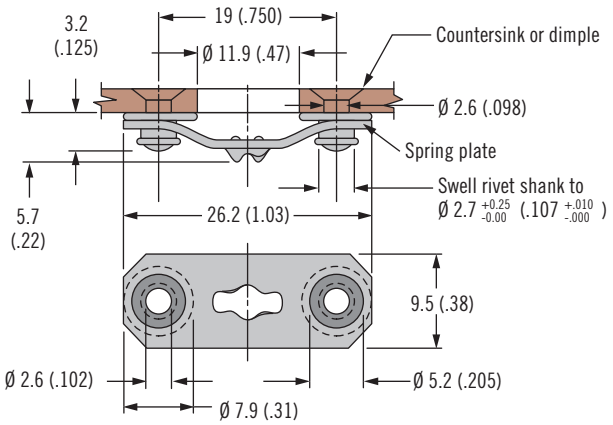

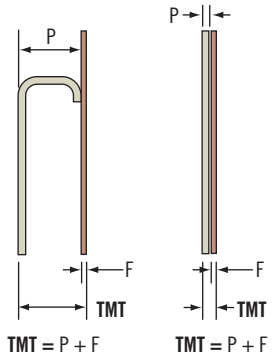

ACTUAL SIZE

Material	Part Number	Stud Selection Column
Steel	82-35-295-15	D
Stainless steel	82-35-295-20	

Dimensions in millimeters (inch) unless otherwise stated

Weld-On

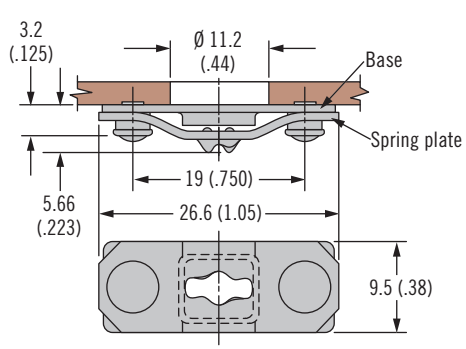

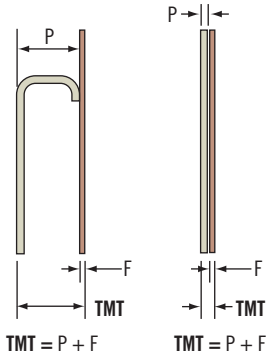

ACTUAL SIZE

Part Number	Stud Selection Column
82-35-303-15	D

Material and Finish
Steel, zinc immersion coating

Installation Notes
Spring plate must float freely after welding

Part Number
See table

Notes
Utilize stud selection column indicated when choosing a stud length from the stud length table on page 437

Side Mount

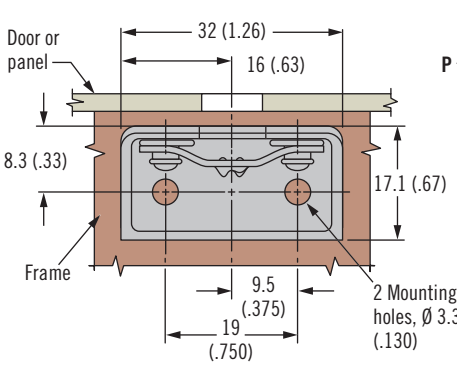

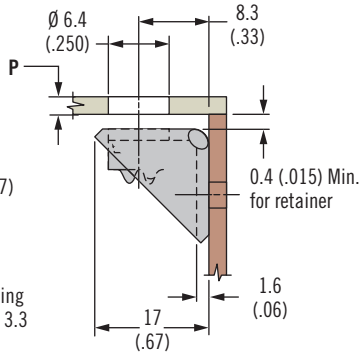

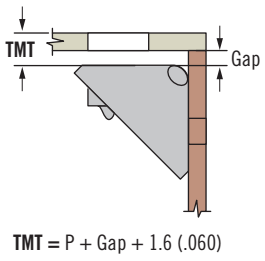

ACTUAL SIZE

Part Number	Stud Selection Column
82-45-101-15	D

Material and Finish
Steel, zinc immersion coating

Installation Notes
Install with Ø 2.5 (3/32) rivets

Part Number
See table

Notes
Utilize stud selection column indicated when choosing a stud length from the stud length table on page 437

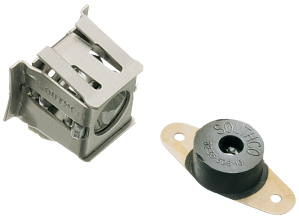

82 *DZUS*® Lion Quarter-Turn Fasteners

Receptacles

Material and Finish

Steel, zinc plated and neoprene

Installation Notes

Install with Ø 2.5 (3/32) rivets

Part Number

See table

Notes

Utilize stud selection column indicated when choosing a stud length from the stud length table on page 437

Vibration Isolating

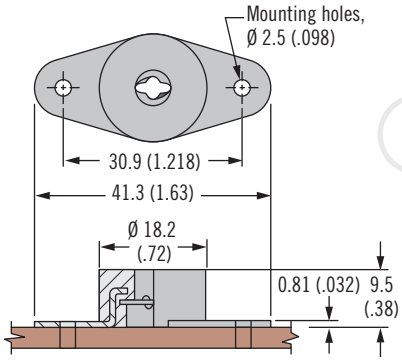

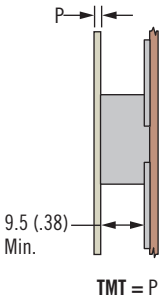

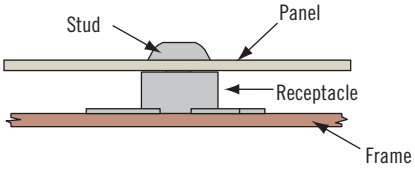

Part Number	Stud Selection Column
82-35-306-10	A

Material and Finish

Steel, zinc plated and stainless steel

Installation Notes

Installation Tool

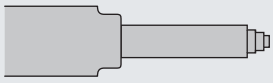

Part Number: 29-8125-309

Part Number

See table

Notes

Utilize stud selection column indicated when choosing a stud length from the stud length table on page 437

Snap-In - Front Mount

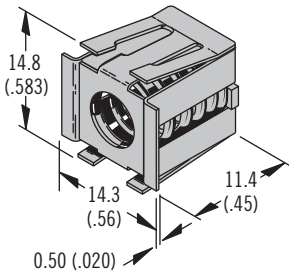

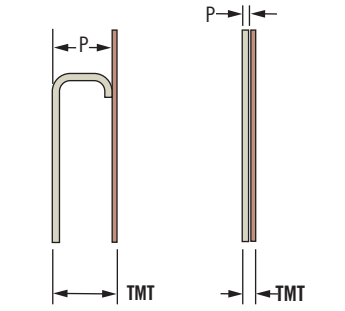

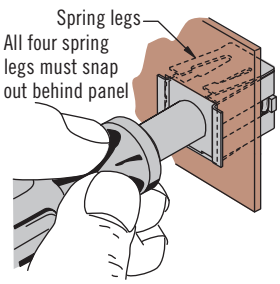

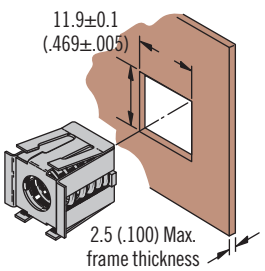

Part Number	Stud Selection Column
82-35-309-56	D

Dimensions in millimeters (inch) unless otherwise stated

82 *DZUS*® Lion Quarter-Turn Fasteners

Receptacles

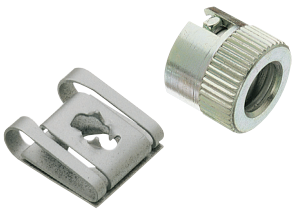

Clip-On

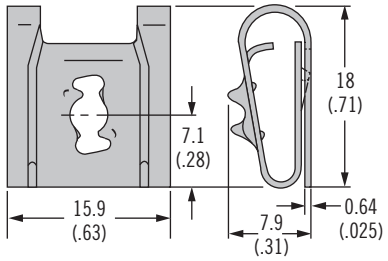

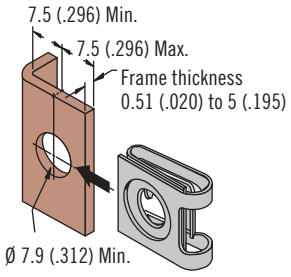

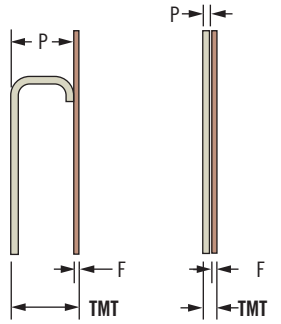

TMT = P + F + 0.76 (.030)

TMT = P + F + 1.4 (.055)

By Hand

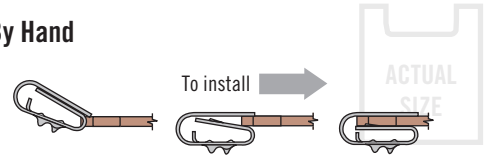

With Screwdriver

Material	Part Number	Stud Selection Column
Steel	82-47-113-15	D
Stainless steel	82-47-113-20	

Material and Finish

Steel, zinc immersion coating or stainless steel

Part Number

See table

Notes

Utilize stud selection column indicated when choosing a stud length from the stud length table on page 437

Press-In

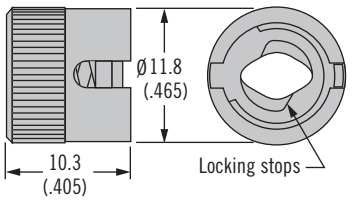

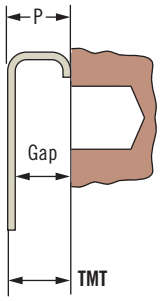

TMT = P + Gap - 0.5 (.020) (when gap is > retainer thickness)

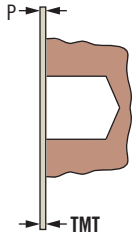

TMT = P + (Retainer adjustment value) - 0.5 (.020)

Material and Finish

Steel, zinc plated and stainless steel

Installation Notes

Press receptacle flush to frame

Notes

Receptacle shown installed flush to the frame. To eliminate the gap between the frame and outer panel, install to a depth ≥ the thickness of the selected retainer. This depth should be added to the TMT.

Solid Install

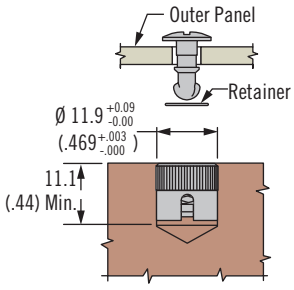

Blind Install

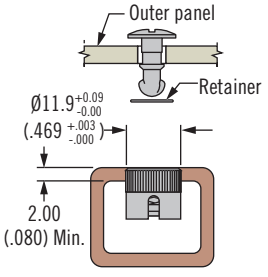

Part Number	Stud Selection Column
82-35-308-55	B

Part Number

See table

Notes

Utilize stud selection column indicated when choosing a stud length from the stud length table on page 437

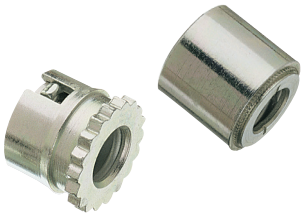

82 *DZUS*® Lion Quarter-Turn Fasteners

Receptacles · Self-clinching

Material and Finish

Steel, zinc plated and stainless steel

Installation Notes

Press receptacle flush to frame

Notes

Receptacle shown installed flush to the frame. To eliminate the gap between the frame and outer panel, install to a depth ≥ the thickness of the selected retainer. This depth should be added to the TMT.

Part Number

See table

Notes

Utilize stud selection column indicated when choosing a stud length from the stud length table on page 437

Ultrasonic For Thermoplastics

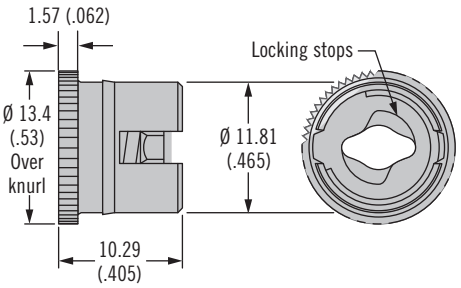

ACTUAL SIZE

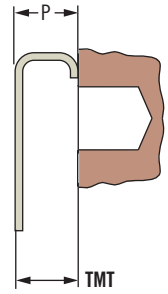

TMT = P - 0.5 (.020)

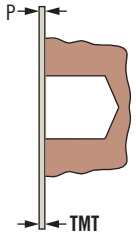

TMT = P + (Retainer adjustment value) - 0.5 (.020)

Installation

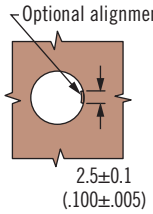

Blind Hole Installation

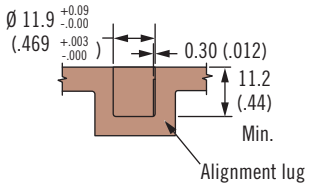

Thru Hole Installation

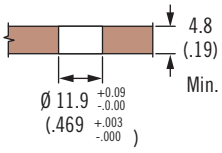

Part Number	Stud Selection Column
82-35-310-55	**B**

Material and Finish

Steel, zinc plated and stainless steel

Installation Notes

For use in low carbon steels, aluminum and stainless steels in the annealed condition that are RB85 or softer

See page 627 for installation guidelines

Part Number

See table

Notes

Utilize stud selection column indicated when choosing a stud length from the stud length table on page 437

Shielded – Self-Clinching

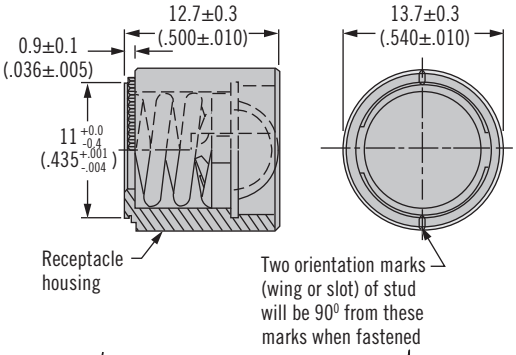

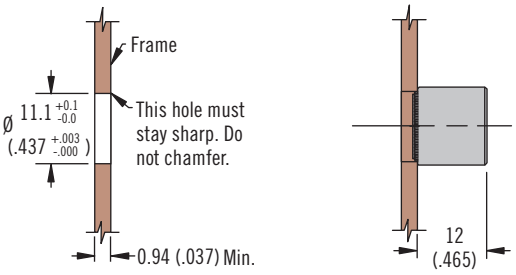

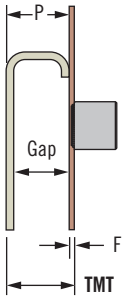

TMT = P + F
(when gap is > retainer thickness)

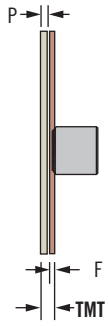

Frame thickness (F) > 0.9 (.036) + Retainer thickness: **TMT** = P + F

Frame thickness (F) ≤ 0.9 (.036) + Retainer thickness:
TMT = P + 0.9 (.036) + Retainer thickness

ACTUAL SIZE

Part Number	Stud Selection Column
82-35-315-55	**C**

Dimensions in millimeters (inch) unless otherwise stated

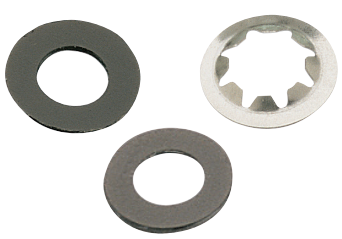

Retainer Push-On

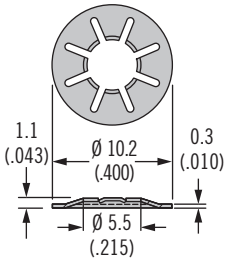

Retainer Push-On Plastic

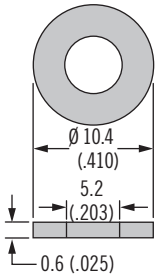

Retainer Split

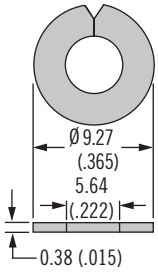

Sealing Washer

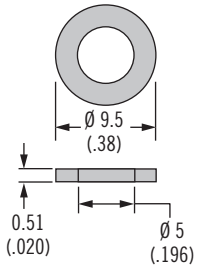

Ejector Spring

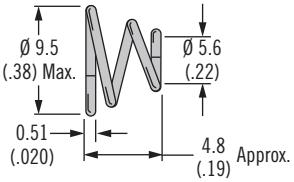

Cupped Washer

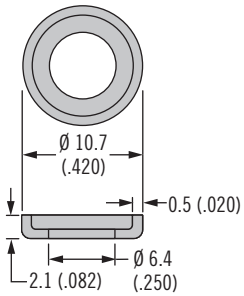

Flat Wear Washer

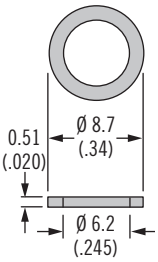

Snap-In Retainer

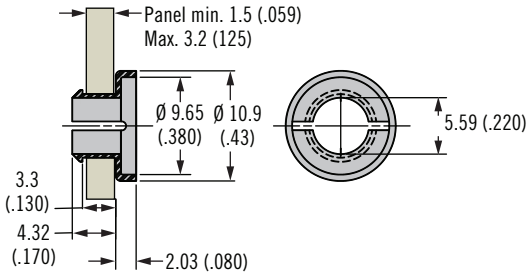

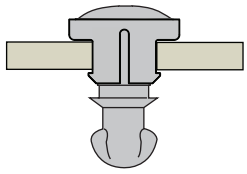

Type	Part Number	Material	Adjustment Value
Push-on retainer	82-32-201-20	Stainless steel	Add 0.25 (.010)
Push-on plastic retainer	82-32-301-12	Nylon, black	Add 0.64 (.025)
Split retainer	82-32-101-20	Stainless steel	Add 0.38 (.015)
Sealing washer	82-43-201-38	Neoprene nitrile rubber, black	Add 0.51 (.020)
Ejector spring	43-13-1-24	Stainless steel	Add 0.51 (.020)
Cupped washer	82-46-101-39	Nylon, white	Add 0.51 (.020)
	82-46-101-41	Nylon, black	
Flat wear washer	82-46-103-39	Nylon, white	Add 0.51 (.020)
Snap-in retainer	82-32-401-41	Nylon, black	Add 0.51 (.020)

Material and Finish
See table

Installation Notes
For standard retainers:

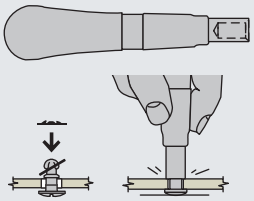

Part Number: 82-0-22542-11

For split retainers:

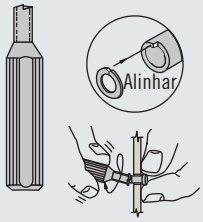

Part Number: 82-0-7595-11

Notes
For snap-in retainer:
Min. stud K = 180 when using snap-in retainer (see page 437 for K reference).

Install stud into retainer before inserting into panel

Part Number
See table

Notes
Adjustment value:
When using accessories the components increase TMT

Add the adjustment value to your outer panel thickness (P) when calculating TMT (see page 435 for example)

85 *DZUS*® Lion Quarter-Turn Fasteners

Studs

Material and Finish

Studs: Steel, zinc plated or stainless steel
Bail cover: ABS, black

Accessories

Tool head recess key:
Part number: 29-90-215-10

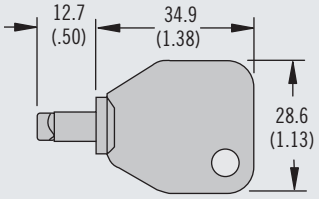

Installation Notes

Bail cover:
A wear washer must be fitted under the stud head to fit flush with surface

Wear washer part number 85-34-301-12 (see page 449)

H Head Styles - Tool Actuated

Oval Slot

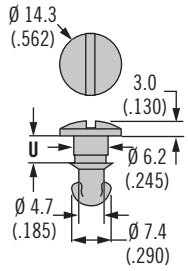

Hex Recess

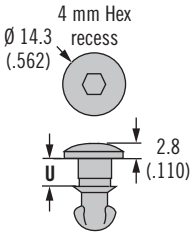

Phillips Recess

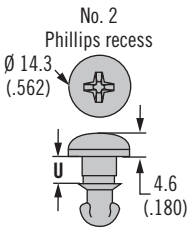

Tool Head Recess

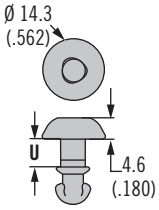

ACTUAL SIZE

H Head Styles - Hand Actuated

Wing

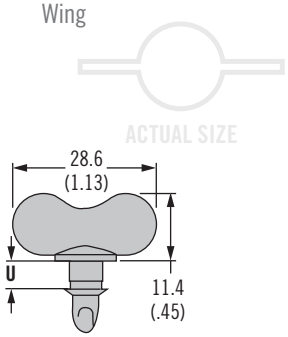

Bail Style RA

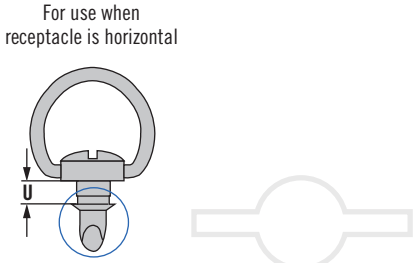

Bail Style RB

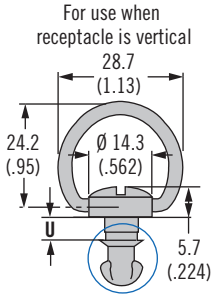

Optional Bail Cover

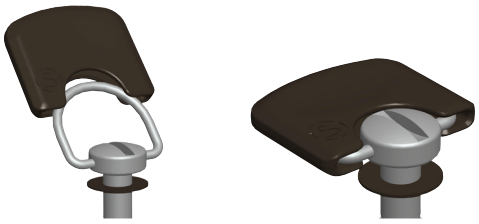

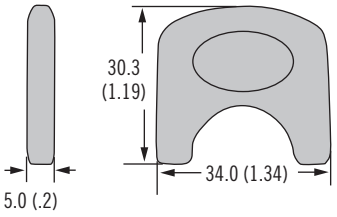

Bail Cover Part Number
85-5-B-000

Stud Panel Preparation

Prepare Hole

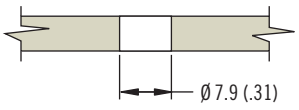

Dimensions in millimeters (inch) unless otherwise stated

85 *DZUS*® Lion Quarter-Turn Fasteners

Stud selection

Part Number Selection

H Head style

- **11** Oval slot
- **12** Wing head
- **15** Bail RA
- **16** Bail RB
- **78** Hex recess
- **P** Oval Phillips recess
- **T** Tool head recess (not available in stainless steel)

K Length
Enter number from selection table below

85 - H - K - M

M Material

- **16** Steel, zinc plated
- **20** Stainless steel (not available in tool head recess head style)

Stud Length Table

A		B		C		K	U
TMT Range For: 85-35-308-55		TMT Range For: 85-35-311-55		TMT Range For: All other receptacles			
Min.	Max.	Min.	Max.	Min.	Max.		
~	~	~	~	2.3 (.090)	2.8 (.110)	**100**	5.2 (.205)
~	~	~	~	2.8 (.110)	3.3 (.130)	**120**	5.7 (.225)
~	~	~	~	3.3 (.130)	3.8 (.150)	**140**	6.2 (.245)
~	~	~	~	3.8 (.150)	4.3 (.170)	**160**	6.7 (.265)
~	~	~	~	4.3 (.170)	4.8 (.190)	**180**	7.2 (.285)
~	~	~	~	4.8 (.190)	5.3 (.210)	**200**	7.7 (.305)
~	~	~	~	5.3 (.210)	5.8 (.230)	**220**	8.3 (.325)
~	~	1.3 (.050)	1.8 (.070)	5.8 (.230)	6.3 (.250)	**240**	8.8 (.345)
0.4 (.015)	0.9 (.035)	1.8 (.070)	2.3 (.090)	6.4 (.250)	6.9 (.270)	**260**	9.3 (.365)
0.9 (.035)	1.4 (.055)	2.3 (.090)	2.8 (.110)	6.9 (.270)	7.4 (.290)	**280**	9.8 (.385)
1.4 (.055)	1.9 (.075)	2.8 (.110)	3.3 (.130)	7.4 (.290)	7.9 (.310)	**300**	10.3 (.405)
1.9 (.075)	2.4 (.095)	3.3 (.130)	3.8 (.150)	7.9 (.310)	8.4 (.330)	**320**	10.8 (.425)
2.4 (.095)	2.9 (.115)	3.8 (.150)	4.3 (.170)	8.4 (.330)	8.9 (.350)	**340**	11.3 (.445)
2.9 (.115)	3.4 (.135)	4.3 (.170)	4.8 (.190)	8.9 (.350)	9.4 (.370)	**360**	11.8 (.465)
3.4 (.135)	3.9 (.155)	4.8 (.190)	5.3 (.210)	9.4 (.370)	9.9 (.390)	**380**	12.3 (.485)
3.9 (.155)	4.4 (.175)	5.3 (.210)	5.8 (.230)	9.9 (.390)	10.4 (.410)	**400**	12.8 (.505)
4.4 (.175)	4.9 (.195)	5.8 (.230)	6.3 (.250)	10.4 (.410)	10.9 (.430)	**420**	13.3 (.525)
5 (.195)	5.5 (.215)	6.4 (.250)	6.9 (.270)	10.9 (.430)	11.4 (.450)	**440**	13.8 (.545)
5.5 (.215)	6 (.235)	6.9 (.270)	7.4 (.290)	11.4 (.450)	11.9 (.470)	**460**	14.4 (.565)
6 (.235)	6.5 (.255)	7.4 (.290)	7.9 (.310)	11.9 (.470)	12.4 (.490)	**480**	14.9 (.585)
6.5 (.255)	7 (.275)	7.9 (.310)	8.4 (.330)	12.5 (.490)	12.9 (.510)	**500**	15.4 (.605)
7 (.275)	7.5 (.295)	8.4 (.330)	8.9 (.350)	13 (.510)	13.5 (.530)	**520**	15.9 (.625)
7.5 (.295)	8 (.315)	8.9 (.350)	9.4 (.370)	13.5 (.530)	14 (.550)	**540**	16.4 (.645)
8 (.315)	8.5 (.335)	9.4 (.370)	9.9 (.390)	14 (.550)	14.5 (.570)	**560**	16.9 (.665)
8.5 (.335)	9 (.355)	9.9 (.390)	10.4 (.410)	14.5 (.570)	15 (.590)	**580**	17.4 (.685)

To select correct fastener:

1. Select receptacle
Choose a receptacle from page 446-448

2. Select retainer and accessories
from page 449 and note any adjustment values

3. Specify stud length
Calculate the total material thickness (TMT) using the formula given for the receptacle selected. Find the range of TMT using the stud length selection table (left) using the column (A, B or C) given for the receptacle selected, find K

4. Complete the stud part number
by specifying the head style H, stud length K, and material M

Example:
For rivet-on with base receptacle 85-35-295-15 use column C
For TMT value calculated as 5.2 (.206), K = 200
For slotted head style in steel material, completed part number: 85-11-200-16
A complete example can be found on page 435

Notes
Stainless steel material may require a higher minimum order quantity. Contact Southco for details.

85 *DZUS*® Lion Quarter-Turn Fasteners

Receptacles

Material and Finish

Steel, zinc immersion coating or stainless steel

Part Number

See table

Notes

Utilize stud selection column indicated when choosing a stud length from the stud length table on page 445

Clip-On

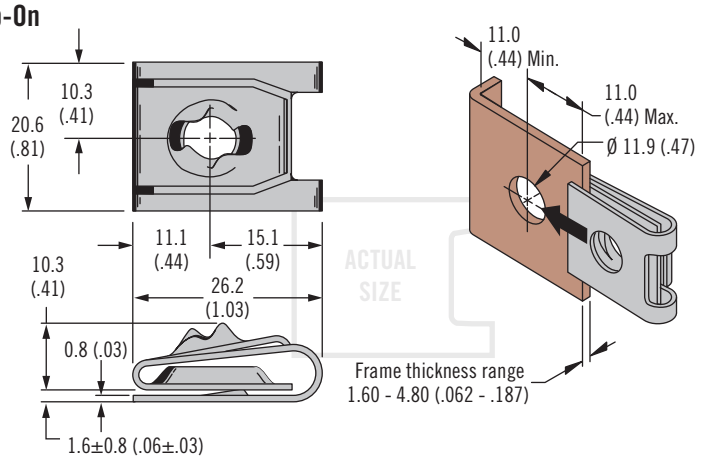

By Hand

With Screwdriver

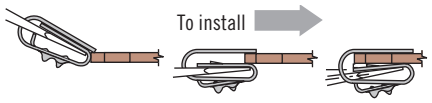

Material	Part Number	Stud Selection Column
Steel	85-47-101-15	C
Stainless steel	85-47-101-20	

Material and Finish

Steel, zinc plated and stainless steel

Installation Tool

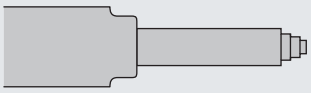

Part Number: 29-8125-309

Part Number

See table

Notes

Utilize stud selection column indicated when choosing a stud length from the stud length table on page 445

Snap-In – Front Mount

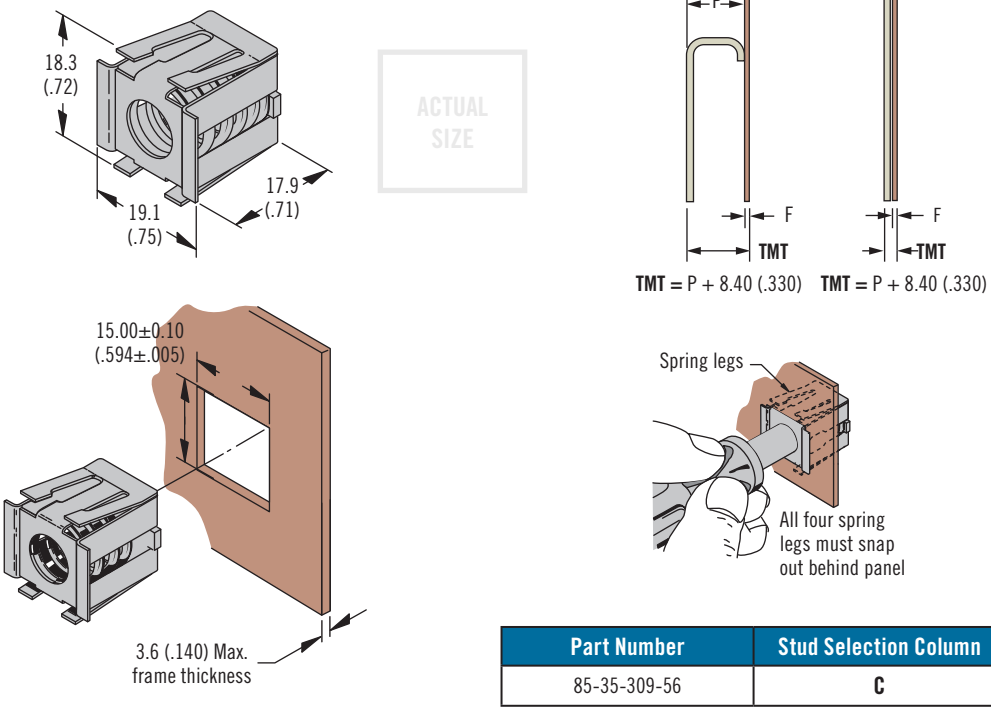

Part Number	Stud Selection Column
85-35-309-56	C

Dimensions in millimeters (inch) unless otherwise stated

85 *DZUS*® Lion Quarter-Turn Fasteners

Receptacles

Press-In

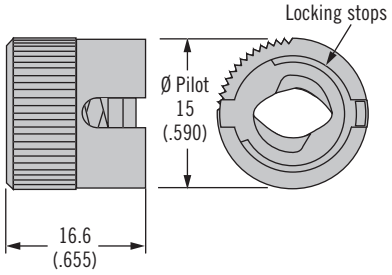

ACTUAL SIZE

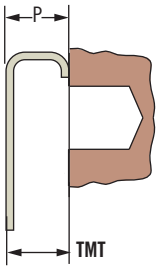

TMT = P + Gap - 0.6 (.025)
(when gap is > retainer thickness)

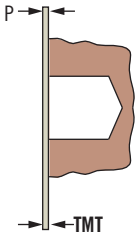

TMT = P +
(Retainer adjustment value)
- 0.6 (.025)

Solid Install

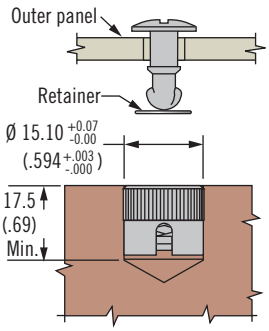

Blind Install

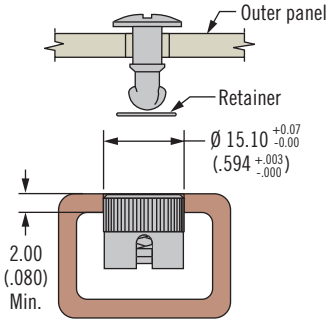

Part Number	Stud Selection Column
85-35-308-55	A

Material and Finish

Steel, zinc plated and stainless steel

Installation Notes

Press receptacle flush to frame

Notes

Receptacle shown installed flush to the frame. To eliminate the gap between the frame and outer panel, install to a depth ≥ the thickness of the selected retainer. This depth should be added to the TMT.

Part Number

See table

Notes

Utilize stud selection column indicated when choosing a stud length from the stud length table on page 445

Shielded – Self-Clinching

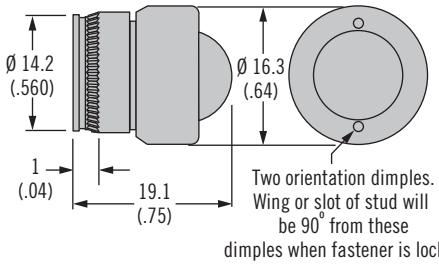

ACTUAL SIZE

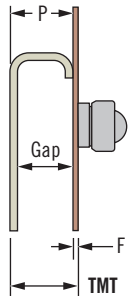

TMT = P + F
(when gap is >
retainer thickness)

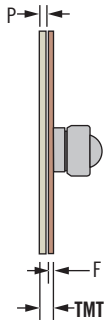

Frame thickness (F) > 0.9 (.036)
+ Retainer thickness: **TMT** = P + F

Frame thickness (F) ≥ 0.9 (.036)
+ Retainer thickness:
TMT = P + 0.9 (.036) + Retainer thickness

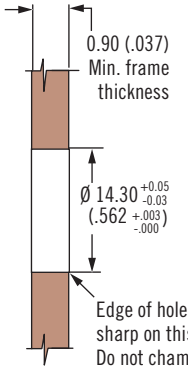

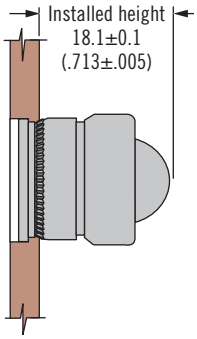

Part Number	Stud Selection Column
85-35-311-55	B

Material and Finish

Steel, zinc plated and stainless steel

Installation Notes

For use in low carbon steels, aluminum and stainless steels in the annealed condition that are R_B85 or softer.

See page 627 for installation guidelines

Installation Tool

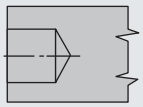

Part number: 90-2825-11

Part Number

See table

Notes

Utilize stud selection column indicated when choosing a stud length from the stud length table on page 445

85 *DZUS*® Lion Quarter-Turn Fasteners

Receptacles

Rivet-On With Base

Material and Finish
Steel, zinc immersion coating or stainless steel

Installation Notes
Install with Ø 3 (.125) rivets, spring must float freely after riveting

Part Number
See table

Notes
Utilize stud selection column indicated when choosing a stud length from the stud length table on page 445

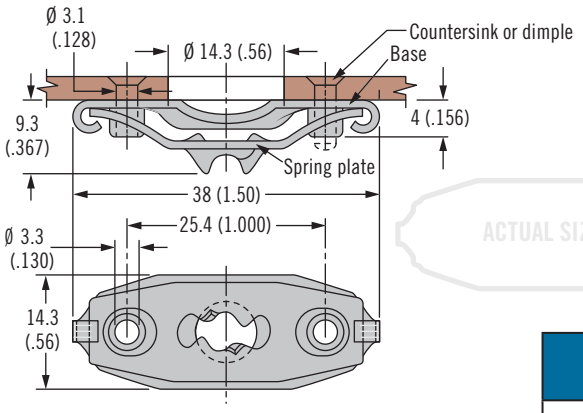

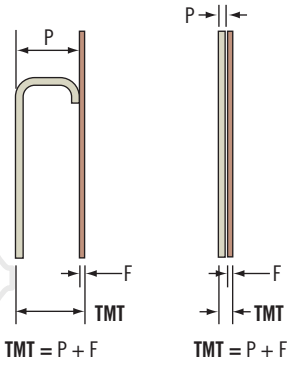

Material	Part Number	Stud Selection Column
Steel	85-35-295-15	C
Stainless steel	85-35-295-20	

Weld-On

Material and Finish
Steel, zinc immersion coating

Installation Notes
Spring must float freely after welding

Part Number
See table

Notes
Utilize stud selection column indicated when choosing a stud length from the stud length table on page 445

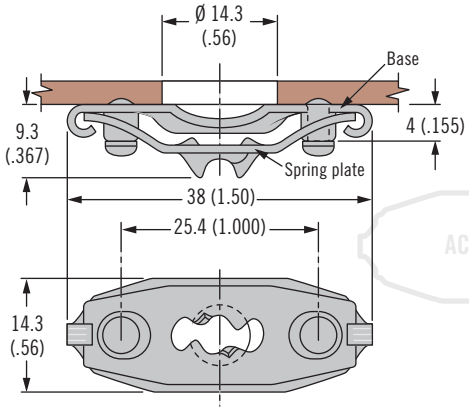

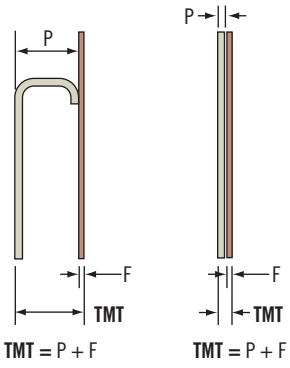

Part Number	Stud Selection Column
85-35-296-15	C

Side Mount

Material and Finish
Steel, zinc immersion coating

Part Number
See table

Notes
Utilize stud selection column indicated when choosing a stud length from the stud length table on page 445

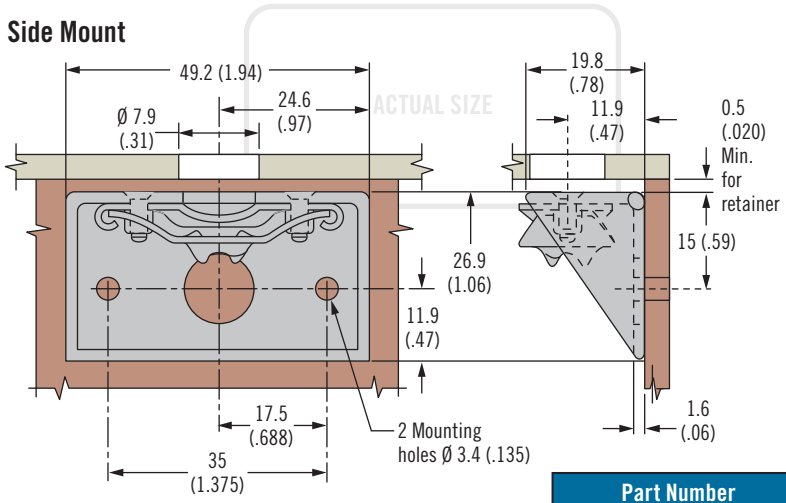

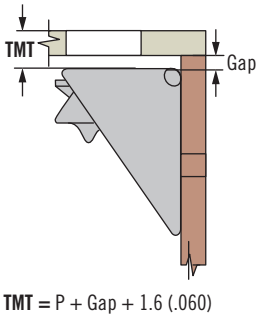

Part Number	Stud Selection Column
85-45-101-15	C

Dimensions in millimeters (inch) unless otherwise stated

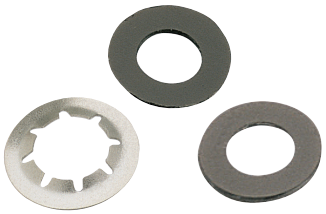

Retainers

Push-On - Stainless Steel

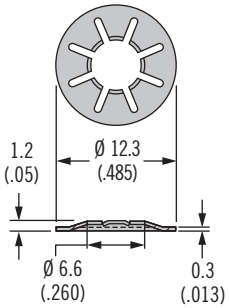

Push-On - Plastic

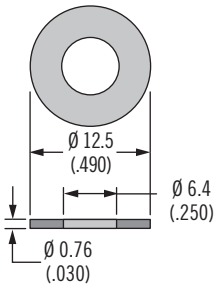

Push-On - Neoprene

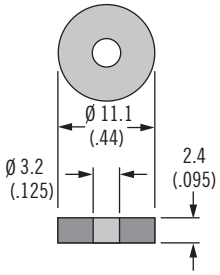

Sealing Washer

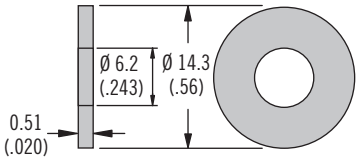

Ejector Spring

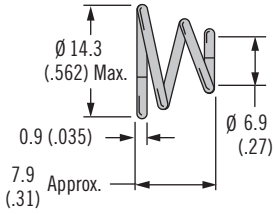

Cupped Washer

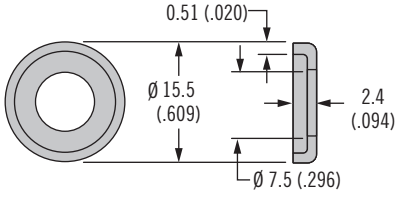

Flat Wear Washer

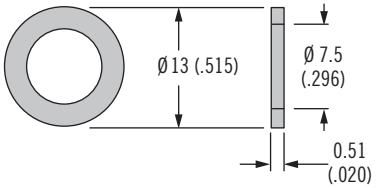

Type	Part Number	Material	Adjustment Value
Push-on - Stainless steel	85-34-201-20	Stainless steel	Add 0.33 (.013)
Push-on - Plastic	85-34-301-12	Nylon, black	Add 0.76 (.030)
Push-on - Neoprene	85-33-101-27	Neoprene, black	Add 1.22 (.048)
Sealing washer	85-43-201-38	Neoprene nitrile rubber, black	Add 0.51 (.020)
Ejector spring	14-18-150-24	Stainless steel	Add 1.00 (.039)
Cupped washer	85-46-101-39	Nylon, white	Add 0.51 (.020)
	85-46-101-41	Nylon, black	
Flat wear washer	85-46-103-39	Nylon, white	Add 0.51 (.020)

Material and Finish
See table

Installation Notes
For standard retainers use tool

Part number 85-0-22543-11

Part Number
See table

Adjustment value:
When using accessories the components add thickness

Add the adjustment value to your outer panel thickness (P) when calculating TMT (see page 435 for example)

D8 *DZUS® PANEX* Quarter-Turn Fasteners

Studs · Size 4

Material and Finish

Studs: Steel, zinc plated plus chromate or chrome plated
Bail cover: ABS, black

H Head Styles - Tool Actuated

Oval Slot

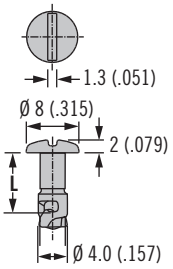

Hex Recess

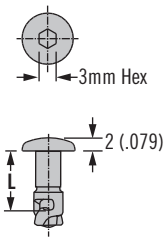

Phillips Recess

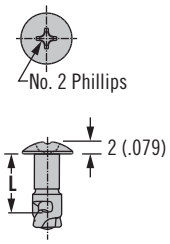

H Head Styles - Hand Actuated

Wing

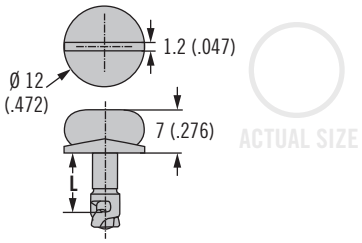

Bail

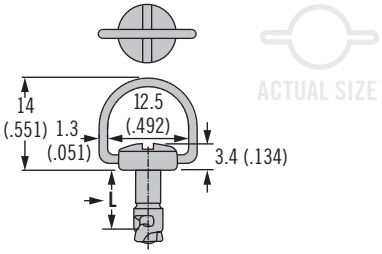

Installation Notes

Bail cover:
A Retainer must be fitted under the stud head to fit flush with surface

Retainer part number
D8-324-100-040 (see page 455)

Optional Bail Cover

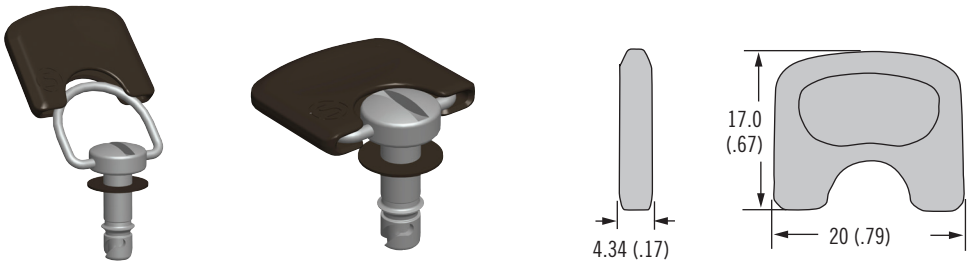

Bail Cover Part Number
D8-4-B-000

Stud Panel Preparation

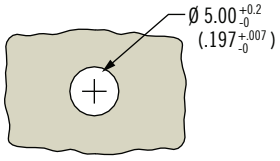

Dimensions in millimeters (inch) unless otherwise stated

D8 *DZUS® PANEX* Quarter-Turn Fasteners

Stud selection · Size 4

Part Number Selection

H Head style
- **1** Slot recess
- **2** Hex recess
- **3** Wing
- **4** Bail
- **7** Phillips recess

K Length
Enter number from selection table below

D8 - 314 - H K - F

F Finish
- **170** Chrome plated
- **190** Zinc plated
- **191** Zinc plated, black

Stud Length Table

A		B		C		D		E		K	L ±.15 ±(.006)
TMT Range For: D8-334-400-121 D8-334-500-121		TMT Range For: D8-334-300-121 D8-334-310-121 D8-334-700-121		TMT Range For: D8-334-200-190		TMT Range For: D8-334-100-300		TMT Range For: D8-334-110-190			
Min.	Max.	Min.	Max.	Min.	Max.	Min.	Max.	Min.	Max.		
1.0 (.04)	1.9 (.07)	1.5 (.06)	2.4 (.09)	~	~	~	~	~	~	**08**	8 (.315)
2.0 (.08)	2.9 (.11)	2.5 (.10)	3.4 (.13)	~	~	~	~	~	~	**09**	9 (.354)
3.0 (.12)	3.9 (.15)	3.5 (.14)	4.4 (.17)	~	~	0.7 (.03)	1.6 (.06)	1.7 (.07)	2.6 (.10)	**10**	10 (.394)
4.0 (.16)	4.9 (.19)	4.5 (.18)	5.4 (.21)	~	~	1.7 (.07)	2.6 (.10)	2.7 (.11)	3.6 (.14)	**11**	11 (.433)
5.0 (.20)	5.9 (.23)	5.5 (.22)	6.4 (.25)	1.5 (.06)	2.4 (.09)	2.7 (.11)	3.6 (.14)	3.7 (.15)	4.6 (.18)	**12**	12 (.472)
6.0 (.24)	6.9 (.27)	6.5 (.26)	7.4 (.29)	2.5 (.10)	3.4 (.13)	3.7 (.15)	4.6 (.18)	4.7 (.19)	5.6 (.22)	**13**	13 (.512)
7.0 (.28)	7.9 (.31)	7.5 (.30)	8.4 (.33)	3.5 (.14)	4.4 (.17)	4.7 (.19)	5.6 (.22)	5.7 (.22)	6.6 (.26)	**14**	14 (.551)
8.0 (.31)	8.9 (.35)	8.5 (.33)	9.4 (.37)	4.5 (.18)	5.4 (.21)	5.7 (.22)	6.6 (.26)	6.7 (.26)	7.6 (.30)	**15**	15 (.591)
9.0 (.35)	9.9 (.39)	9.5 (.37)	10.4 (.41)	5.5 (.22)	6.4 (.25)	6.7 (.26)	7.6 (.30)	7.7 (.30)	8.6 (.34)	**16**	16 (.630)
10.0 (.39)	10.9 (.43)	10.5 (.41)	11.4 (.45)	6.5 (.26)	7.4 (.29)	7.7 (.30)	8.6 (.34)	8.7 (.34)	9.6 (.38)	**17**	17 (.669)
11.0 (.43)	11.9 (.47)	11.5 (.45)	12.4 (.49)	7.5 (.30)	8.4 (.33)	8.7 (.34)	9.6 (.38)	9.7 (.38)	10.6 (.42)	**18**	18 (.709)
12.0 (.47)	12.9 (.51)	12.5 (.49)	13.4 (.53)	8.5 (.33)	9.4 (.37)	9.7 (.38)	10.6 (.42)	10.7 (.42)	11.6 (.46)	**19**	19 (.748)
13.0 (.51)	13.9 (.55)	13.5 (.53)	14.4 (.57)	9.5 (.37)	10.4 (.41)	10.7 (.42)	11.6 (.46)	11.7 (.46)	12.6 (.50)	**20**	20 (.787)
14.0 (.55)	14.9 (.59)	14.5 (.57)	15.4 (.61)	10.5 (.41)	11.4 (.45)	11.7 (.46)	12.6 (.50)	12.7 (.50)	13.6 (.54)	**21**	21 (.827)
15.0 (.59)	15.9 (.63)	15.5 (.61)	16.4 (.65)	11.5 (.45)	12.4 (.49)	12.7 (.50)	13.6 (.54)	13.7 (.54)	14.6 (.57)	**22**	22 (.866)
16.0 (.63)	16.9 (.67)	16.5 (.65)	17.4 (.69)	12.5 (.49)	13.4 (.53)	13.7 (.54)	14.6 (.57)	14.7 (.58)	15.6 (.61)	**23**	23 (.906)
17.0 (.67)	17.9 (.70)	17.5 (.69)	18.4 (.72)	13.5 (.53)	14.4 (.57)	14.7 (.58)	15.6 (.61)	15.7 (.62)	16.6 (.65)	**24**	24 (.945)
18.0 (.71)	18.9 (.74)	18.5 (.73)	19.4 (.76)	14.5 (.57)	15.4 (.61)	15.7 (.62)	16.6 (.65)	16.7 (.66)	17.6 (.69)	**25**	25 (.984)
19.0 (.75)	19.9 (.78)	19.5 (.77)	20.4 (.80)	15.5 (.61)	16.4 (.65)	16.7 (.66)	17.6 (.69)	17.7 (.70)	18.6 (.73)	**26**	26 (1.02)
20.0 (.79)	20.9 (.82)	20.5 (.81)	21.4 (.84)	16.5 (.65)	17.4 (.69)	17.7 (.70)	18.6 (.73)	18.7 (.74)	19.6 (.77)	**27**	27 (1.06)
21.0 (.83)	21.9 (.86)	21.5 (.85)	22.4 (.88)	17.5 (.69)	18.4 (.72)	18.7 (.74)	19.6 (.77)	19.7 (.78)	20.6 (.81)	**28**	28 (1.10)
22.0 (.87)	22.9 (.90)	22.5 (.89)	23.4 (.92)	18.5 (.73)	19.4 (.76)	19.7 (.78)	20.6 (.81)	20.7 (.81)	21.6 (.85)	**29**	29 (1.14)
23.0 (.91)	23.9 (.94)	23.5 (.93)	24.4 (.96)	19.5 (.77)	20.4 (.80)	20.7 (.81)	21.6 (.85)	21.7 (.85)	22.6 (.89)	**30**	30 (1.18)

To select correct fastener:

1. Select receptacle
Choose a receptacle from pages 452-454

2. Select retainer and accessories
from page 455 and note any adjustment values

3. Specify stud length
Calculate the total material thickness (TMT) using the formula given for the receptacle selected. Find the range of TMT using the length selection table (left) using the column (A, B ,C ,D or E) given for the receptacle selected.

4. Complete the stud part number
by specifying the head style H, stud length K, and material M

Example:
For rivet-on
D8-334-400-121 use column A
For TMT value calculated as 5.2 (.206), K = 12
For slotted head style in steel, zinc plated material, completed part number: D8-314-112-190
A complete example can be found on page 435.

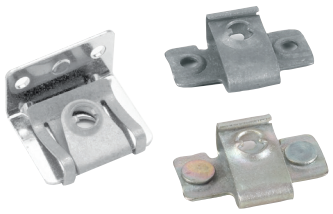

D8 *DZUS® PANEX* Quarter-Turn Fasteners

Receptacles · Size 4

Rivet-On

Material and Finish
Steel, zinc immersion coating

Installation Notes
Install with Ø 3 (.125) rivets

Part Number
See table

Notes
Utilize stud selection column indicated when choosing a stud length from the stud length table on page 451

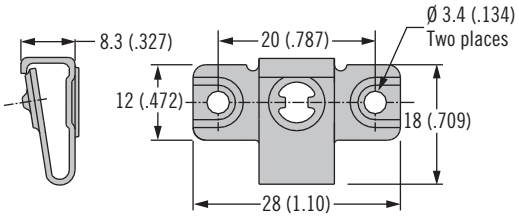

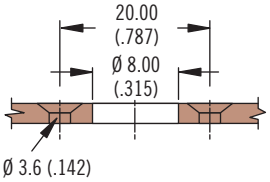

ACTUAL SIZE

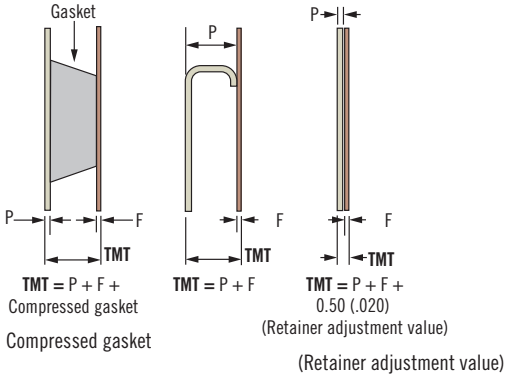

Part Number	Stud Selection Column
D8-334-400-121	A

Weld-On

Material and Finish
Steel, zinc immersion coating

Part Number
See table

Notes
Utilize stud selection column indicated when choosing a stud length from the stud length table on page 451

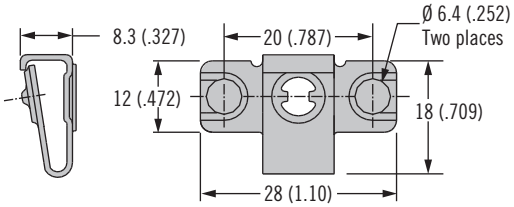

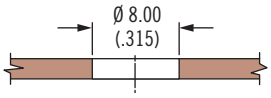

ACTUAL SIZE

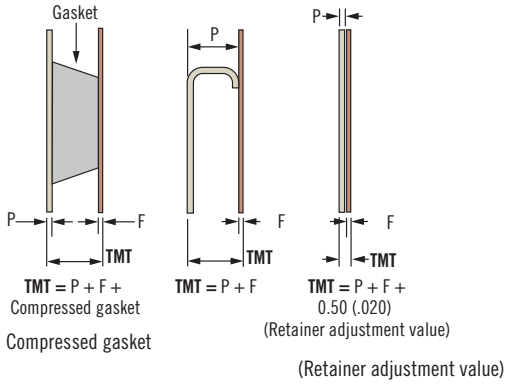

Part Number	Stud Selection Column
D8-334-500-121	A

Side Mount

Material and Finish
Steel, zinc immersion coating

Part Number
See table

Notes
Utilize stud selection column indicated when choosing a stud length from the stud length table on page 451

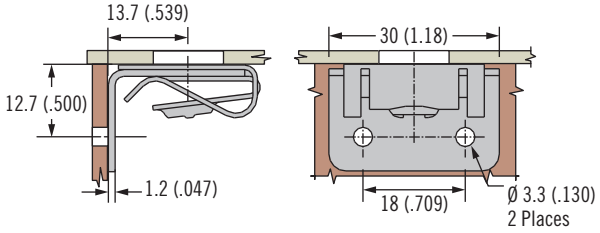

ACTUAL SIZE

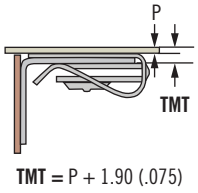

Part Number	Stud Selection Column
D8-334-310-121	B

Dimensions in millimeters (inch) unless otherwise stated

D8 *DZUS® PANEX* Quarter-Turn Fasteners

Receptacles · Size 4

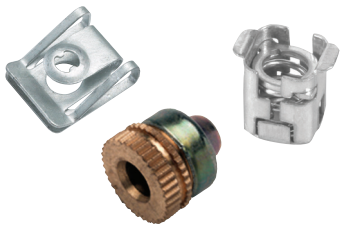

Clip-On

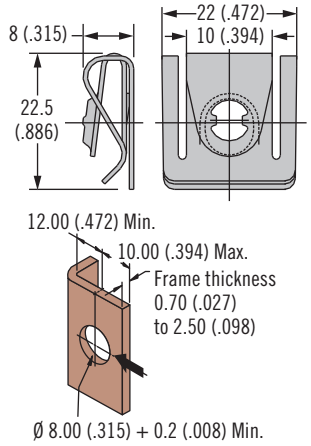

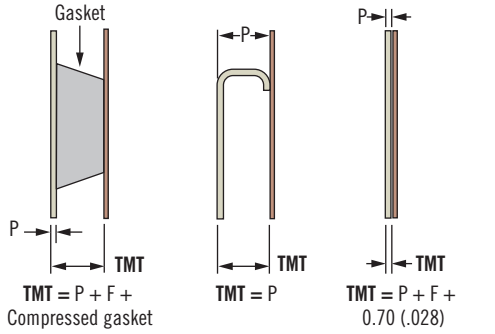

Part Number	Stud Selection Column
D8-334-300-121	B

Material and Finish

Steel, zinc immersion coating

Part Number

See table

Notes

Utilize stud selection column indicated when choosing a stud length from the stud length table on page 451

Front Mount Clip-In

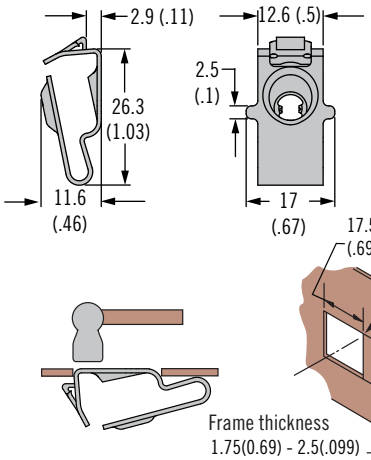

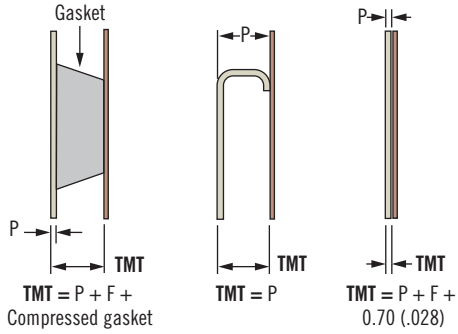

Part Number	Stud Selection Column
D8-334-700-121	B

Material and Finish

Steel, zinc immersion coating

Part Number

See table

Notes

Utilize stud selection column indicated when choosing a stud length from the stud length table on page 451

Front Mount Snap-In

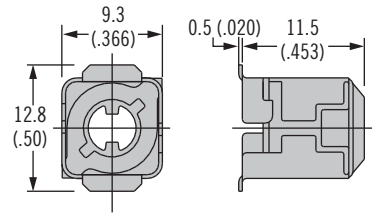

Installation

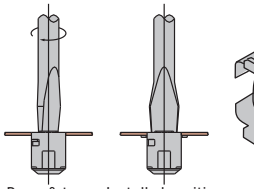

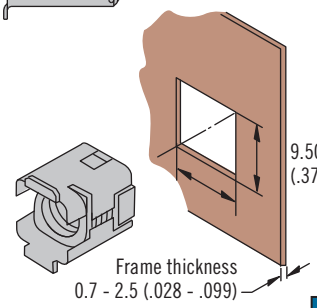

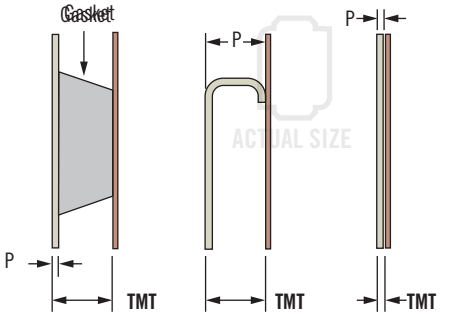

Part Number	Stud Selection Column
D8-334-200-190	C

Material and Finish

Steel, zinc plated

Part Number

See table

Notes

Utilize stud selection column indicated when choosing a stud length from the stud length table on page 451

D8 *DZUS® PANEX* Quarter-Turn Fasteners

Receptacles · Size 4

Material and Finish

Brass and steel, zinc plated

Installation Notes

Press receptacle flush to frame

Notes

Receptacle shown installed flush to the frame. To eliminate the gap between the frame and outer panel, install to a depth ≥ the thickness of the selected retainer. This depth should be added to the TMT.

Part Number

See table

Notes

Utilize stud selection column indicated when choosing a stud length from the stud length table on page 451

Press-In - Front Mount

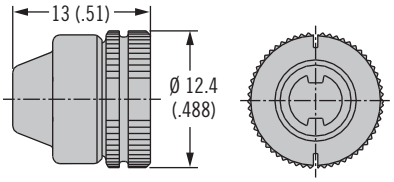

ACTUAL SIZE

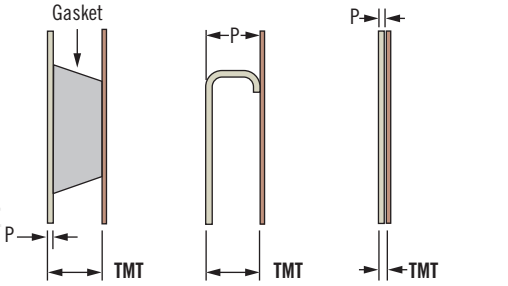

Solid Install

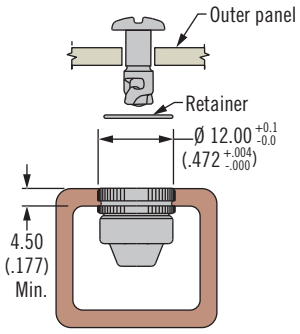

Blind Install

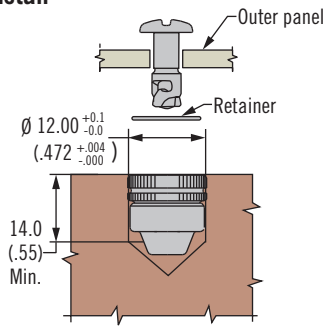

Part Number	Stud Selection Column
D8-334-100-300	D

Material and Finish

Steel, zinc plated

Notes

For use in low carbon steels, aluminum and stainless steels in the annealed condition that are RB85 or softer

See page 627 for installation guidelines

Part Number

See table

Notes

Utilize stud selection column indicated when choosing a stud length from the stud length table on page 451

Press-In - Self-Clinching

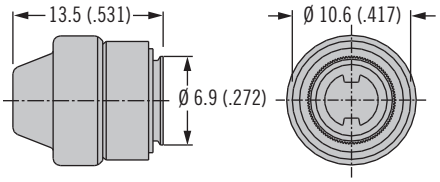

ACTUAL SIZE

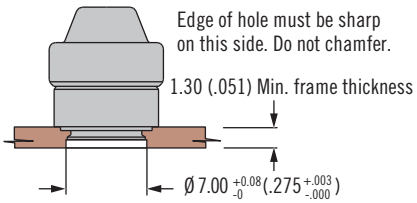

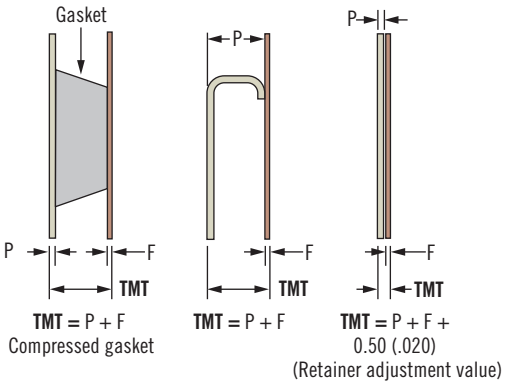

Part Number	Stud Selection Column
D8-334-110-190	E

Dimensions in millimeters (inch) unless otherwise stated

DZUS® | southco®

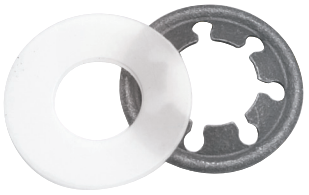

Retainer Push-On

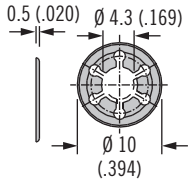

Retainer Push-On Plastic

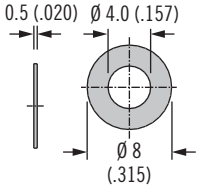

Material and Finish

See table

Part Number

See table

Type	Part Number	Material	Adjustment Value
Push-on plastic	D8-324-100-040	High density polyethylene, black	Included in TMT calculation
Push-on	D8-324-101-200	Stainless steel	

Retainer Spring (Must be secured with steel retainer)

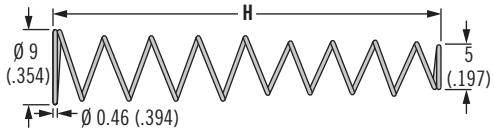

With Retaining Spring

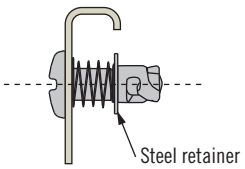

Without Retaining Spring

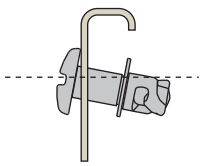

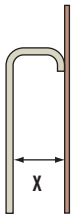

Part Number	H	X Min.	X Max.
D8-324-200-200	48 (1.89)	14 (.551)	44 (1.73)
D8-324-201-200	20 (.787)	5 (.197)	16 (.630)

D8 *DZUS® PANEX* Quarter-Turn Fasteners

Studs · Size 6

Material and Finish

Studs: Steel, zinc plated and chromate or chrome plated or stainless steel
Key: Steel with zinc plate and chromate
Bail cover: ABS, black

Accessories

Tamper resistant stud key:
Part number: D8-316-007-969

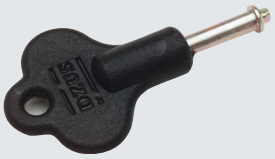

Installation Notes

Bail cover: A Retainer must be fitted under the stud head to fit flush with surface

Retainer part number D8-326-100-040 (see page 461)

H Head Styles - Tool Actuated

Oval Slot

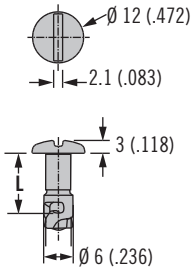

Hex Recess

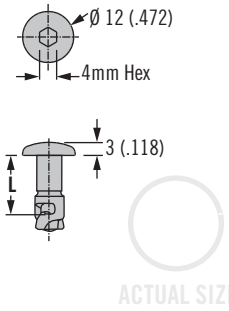

Phillips Recess

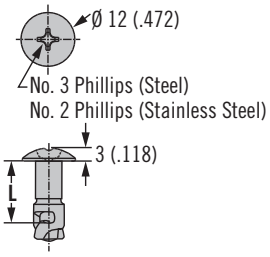

Tamper Resistant

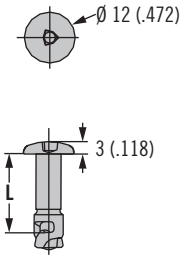

H Head Styles - Hand Actuated

Wing

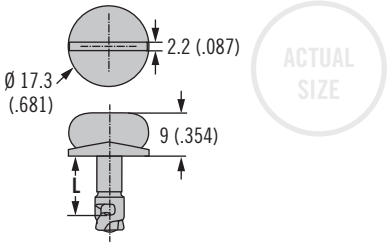

Bail

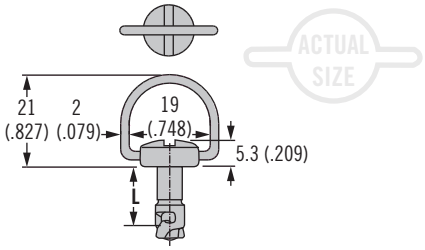

Optional Bail Cover

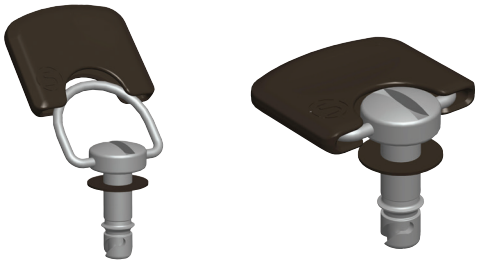

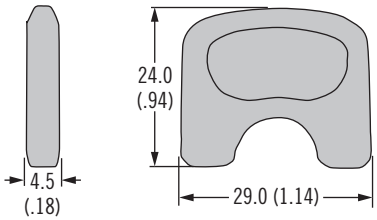

Bail Cover Part Number
D8-6-B-000

Stud Panel Preparation

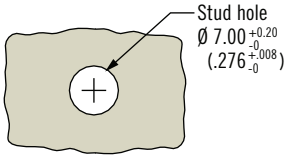

Dimensions in millimeters (inch) unless otherwise stated

D8 *DZUS® PANEX* Quarter-Turn Fasteners

Stud selection · Size 6

H Head style
- **1** Slot recess
- **2** Hex recess
- **3** Wing
- **4** Bail (standard stud only)
- **6** Tamper resistant
- **7** Phillips recess

D8 - 316 - H K - F

F Finish
- **170** Chrome plated
- **190** Zinc plated
- **191** Zinc plated, black
- **200** Stainless Steel (Slot recess, Hex recess, Phillips recess)

K Length
Enter number from selection table below

Stud Length Table

A		B		C		D		E		K	L ±.15 ±(.006)
TMT Range For: D8-336-400-121 D8-336-500-121		TMT Range For: D8-336-300-121 D8-336-310-121 D8-336-330-121 D8-336-700-121		TMT Range For: D8-336-200-190		TMT Range For: D8-336-100-300		TMT Range For: D8-336-110-190			
Min.	Max.	Min.	Max.	Min.	Max.	Min.	Max.	Min.	Max.		
~	~	1.5 (.06)	2.4 (.09)	~	~	~	~	~	~	**09**	9 (.354)
2.5 (.10)	3.4 (.13)	2.5 (.10)	3.4 (.13)	~	~	~	~	~	~	**10**	10 (.394)
3.5 (.14)	4.4 (.17)	3.5 (.14)	4.4 (.17)	~	~	~	~	~	~	**11**	11 (.433)
4.5 (.18)	5.4 (.21)	4.5 (.18)	5.4 (.21)	~	~	0.7 (.03)	1.6 (.06)	1.7 (.07)	2.6 (.10)	**12**	12 (.472)
5.5 (.22)	6.4 (.25)	5.5 (.22)	6.4 (.25)	~	~	1.7 (.07)	2.6 (.10)	2.7 (.11)	3.6 (.14)	**13**	13 (.512)
6.5 (.26)	7.4 (.29)	6.5 (.26)	7.4 (.29)	~	~	2.7 (.11)	3.6 (.14)	3.7 (.15)	4.6 (.18)	**14**	14 (.551)
7.5 (.30)	8.4 (.33)	7.5 (.30)	8.4 (.33)	~	~	3.7 (.15)	4.6 (.18)	4.7 (.19)	5.6 (.22)	**15**	15 (.591)
8.5 (.33)	9.4 (.37)	8.5 (.33)	9.4 (.37)	0.8 (.03)	1.7 (.07)	4.7 (.19)	5.6 (.22)	5.7 (.22)	6.6 (.26)	**16**	16 (.630)
9.5 (.37)	10.4 (.41)	9.5 (.37)	10.4 (.41)	1.8 (.07)	2.7 (.11)	5.7 (.22)	6.6 (.26)	6.7 (.26)	7.6 (.30)	**17**	17 (.669)
10.5 (.41)	11.4 (.45)	10.5 (.41)	11.4 (.45)	2.8 (.11)	3.7 (.15)	6.7 (.26)	7.6 (.30)	7.7 (.30)	8.6 (.34)	**18**	18 (.709)
11.5 (.45)	12.4 (.49)	11.5 (.45)	12.4 (.49)	3.8 (.15)	4.7 (.19)	7.7 (.30)	8.6 (.34)	8.7 (.34)	9.6 (.38)	**19**	19 (.748)
12.5 (.49)	13.4 (.53)	12.5 (.49)	13.4 (.53)	4.8 (.19)	5.7 (.22)	8.7 (.34)	9.6 (.38)	9.7 (.38)	10.6 (.42)	**20**	20 (.787)
13.5 (.53)	14.4 (.57)	13.5 (.53)	14.4 (.57)	5.8 (.23)	6.7 (.26)	9.7 (.38)	10.6 (.42)	10.7 (.42)	11.6 (.46)	**21**	21 (.827)
14.5 (.57)	15.4 (.61)	14.5 (.57)	15.4 (.61)	6.8 (.27)	7.7 (.30)	10.7 (.42)	11.6 (.46)	11.7 (.46)	12.6 (.50)	**22**	22 (.866)
15.5 (.61)	16.4 (.65)	15.5 (.61)	16.4 (.65)	7.8 (.31)	8.7 (.34)	11.7 (.46)	12.6 (.50)	12.7 (.50)	13.6 (.54)	**23**	23 (.906)
16.5 (.65)	17.4 (.69)	16.5 (.65)	17.4 (.69)	8.8 (.35)	9.7 (.38)	12.7 (.50)	13.6 (.54)	13.7 (.54)	14.6 (.57)	**24**	24 (.945)
17.5 (.69)	18.4 (.72)	17.5 (.69)	18.4 (.72)	9.8 (.39)	10.7 (.42)	13.7 (.54)	14.6 (.57)	14.7 (.58)	15.6 (.61)	**25**	25 (.984)
18.5 (.73)	19.4 (.76)	18.5 (.73)	19.4 (.76)	10.8 (.43)	11.7 (.46)	14.7 (.58)	15.6 (.61)	15.7 (.62)	16.6 (.65)	**26**	26 (1.02)
19.5 (.77)	20.4 (.80)	19.5 (.77)	20.4 (.80)	11.8 (.46)	12.7 (.50)	15.7 (.62)	16.6 (.65)	16.7 (.66)	17.6 (.69)	**27**	27 (1.06)
20.5 (.81)	21.4 (.84)	20.5 (.81)	21.4 (.84)	12.8 (.50)	13.7 (.54)	16.7 (.66)	17.6 (.69)	17.7 (.70)	18.6 (.73)	**28**	28 (1.10)
21.5 (.85)	22.4 (.88)	21.5 (.85)	22.4 (.88)	13.8 (.54)	14.7 (.58)	17.7 (.70)	18.6 (.73)	18.7 (.74)	19.6 (.77)	**29**	29 (1.14)
22.5 (.89)	23.4 (.92)	22.5 (.89)	23.4 (.92)	14.8 (.58)	15.7 (.62)	18.7 (.74)	19.6 (.77)	19.7 (.78)	20.6 (.81)	**30**	30 (1.18)

Part Number Selection

To select correct fastener:

1. Select receptacle
Choose a receptacle from pages 458-460

2. Select retainer and accessories
from page 461 and note any adjustment values

3. Specify stud length
Calculate the total material thickness (TMT) using the formula given for the receptacle selected. Find the range of TMT using the stud length selection table (left) using the column (A, B, C, D or E) given for the receptacle selected.

4. Complete the stud part number
by specifying the head style H, stud length K, and material M

Example:
For rivet-on
D8-336-400-121 use column A
For TMT value calculated as 5.2 (.206), K = 12
For slotted head style in steel material, completed part number: D8-316-112-190
A complete example can be found on page 435.

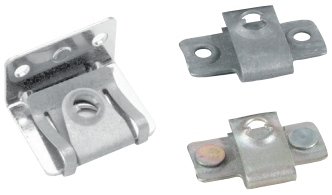

D8 *DZUS® PANEX* Quarter-Turn Fasteners

Receptacles · Size 6

Rivet-On

Material and Finish

Steel, zinc immersion coating or stainless steel

Installation Notes

Install with Ø 3 (.125) rivets

Part Number

See table

Notes

Utilize stud selection column indicated when choosing a stud length from the stud length table on page 457

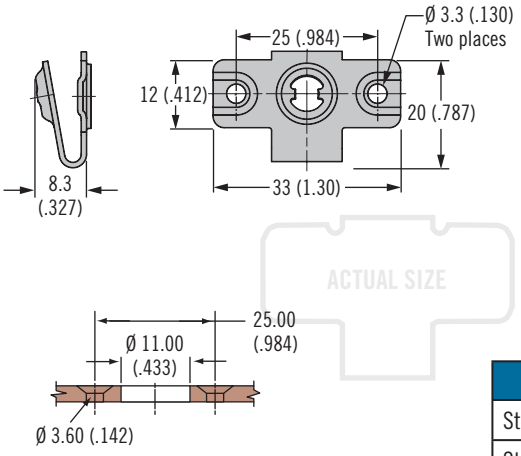

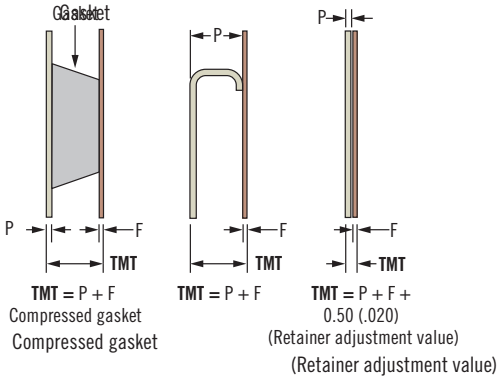

Part Number		Stud Selection Column
Steel	D8-336-400-121	A
Stainless steel	D8-336-400-200	

Weld-On

Material and Finish

Steel, zinc immersion coating

Part Number

See table

Notes

Utilize stud selection column indicated when choosing a stud length from the stud length table on page 457

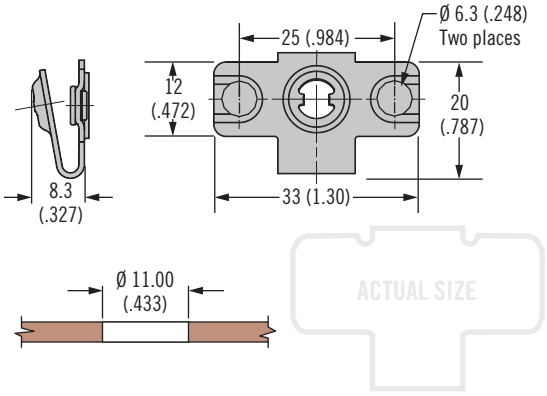

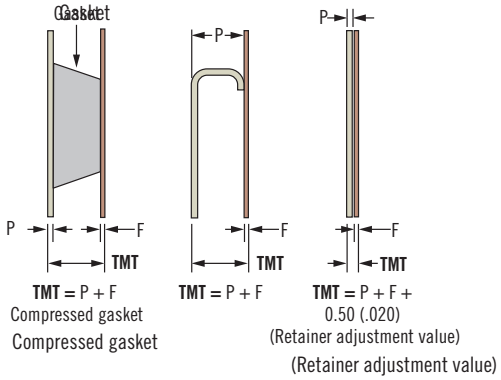

Part Number	Stud Selection Column
D8-336-500-121	A

Side Mount

Material and Finish

Steel, zinc immersion coating

Part Number

See table

Notes

Utilize stud selection column indicated when choosing a stud length from the stud length table on page 457

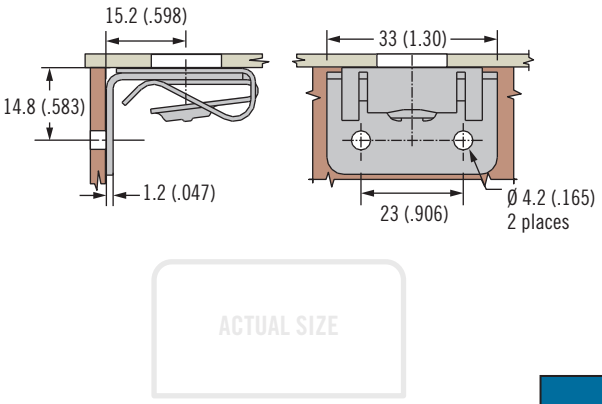

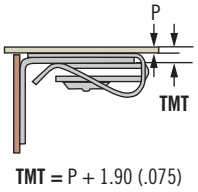

Part Number	Stud Selection Column
D8-336-310-121	B

Dimensions in millimeters (inch) unless otherwise stated

D8 *DZUS® PANEX* Quarter-Turn Fasteners

Receptacles · Size 6

Clip-On

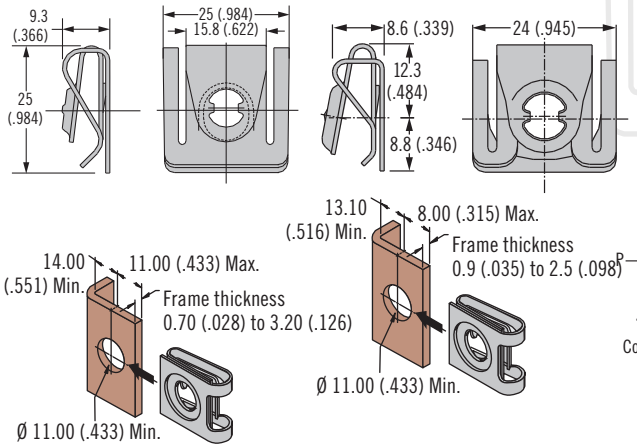

Clip-On - Mini

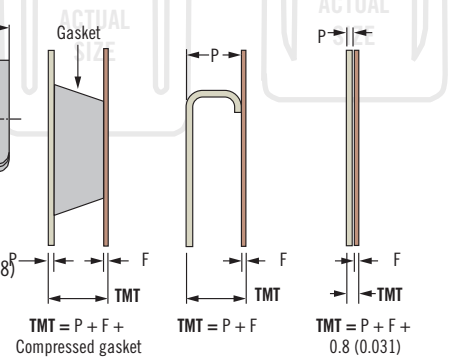

Style	Material	Part Number	C	Stud Selection Column
Clip-On	Steel	D8-336-300-121	0.8(0.031)	B
Clip-On-Mini	Steel	D8-336-330-121	0.7(0.028)	
Clip-On-Mini	Stainless steel	D8-336-330-200		

Front Mount Clip-In

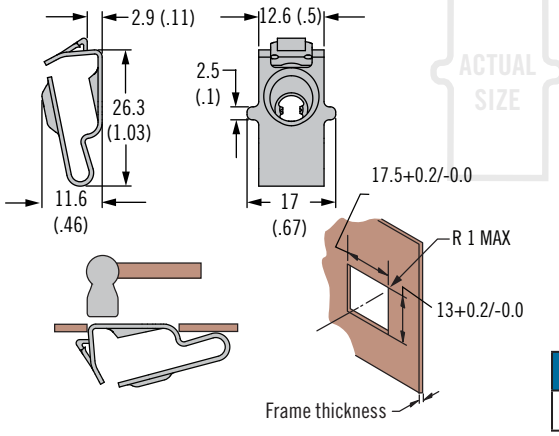

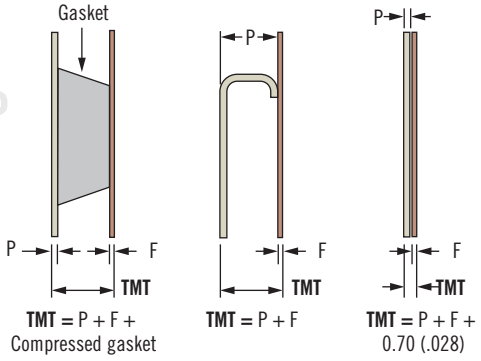

Part Number	Stud Selection Column
D8-336-700-121	B

Front Mount Snap-In

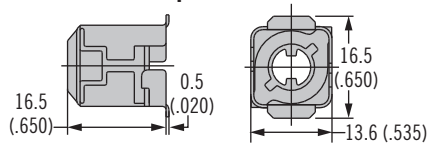

Installation

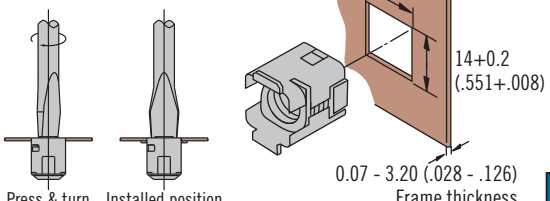

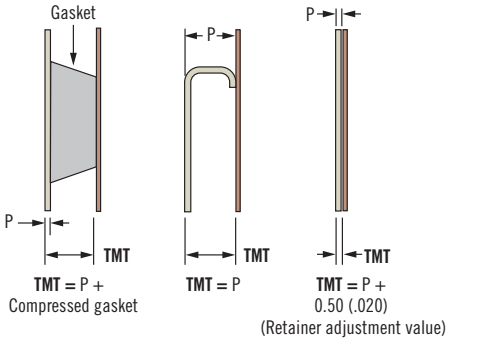

Part Number	Stud Selection Column
D8-336-200-190	C

Material and Finish

Steel, zinc immersion coating

Part Number

See table

Notes

Utilize stud selection column indicated when choosing a stud length from the stud length table on page 457

Material and Finish

Steel, zinc immersion coating

Part Number

See table

Notes

Utilize stud selection column indicated when choosing a stud length from the stud length table on page 457

Material and Finish

Steel, zinc plated

Part Number

See table

Notes

Utilize stud selection column indicated when choosing a stud length from the stud length table on page 457

D8 *DZUS® PANEX* Quarter-Turn Fasteners

Receptacles · Size 6

Material and Finish

Brass and steel, zinc plated

Installation Notes

Press receptacle flush to frame

Notes

Receptacle shown installed flush to the frame. To eliminate the gap between the frame and outer panel, install to a depth ≥ the thickness of the selected retainer. This depth should be added to the TMT.

Part Number

See table

Notes

Utilize stud selection column indicated when choosing a stud length from the stud length table on page 457

Press-In - Front Mount

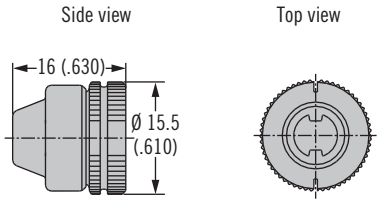

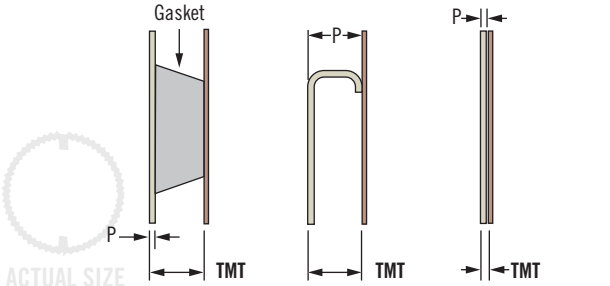

ACTUAL SIZE

Solid Install

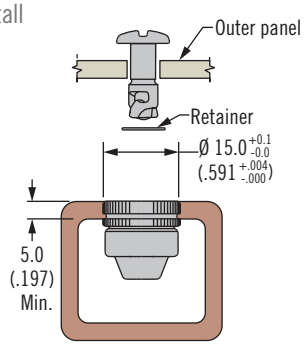

Blind Install

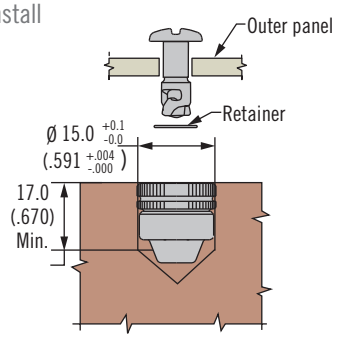

Part Number	Stud Selection Column
D8-336-100-300	D

Press-In - Self-Clinching

Material and Finish

Steel, zinc plated

Installation Notes

See page 627 for installation guidelines

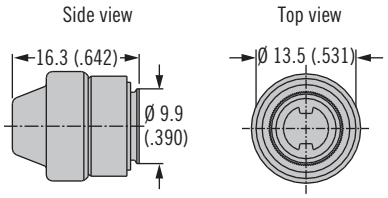

ACTUAL SIZE

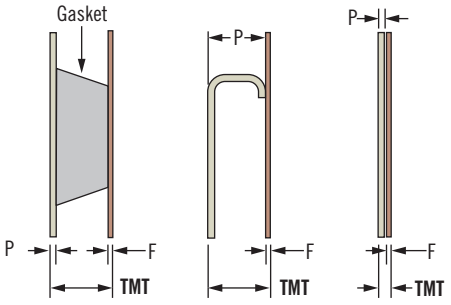

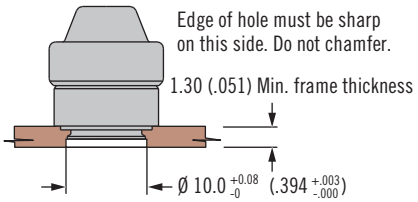

Part Number

See table

Notes

Utilize stud selection column indicated when choosing a stud length from the stud length table on page 457

Part Number	Stud Selection Column
D8-336-110-190	E

Dimensions in millimeters (inch) unless otherwise stated

DZUS® | southco®

D8 *DZUS® PANEX* Quarter-Turn Fasteners

Retainers and Accessories · Size 6

Retainer Push-On, Stainless Steel

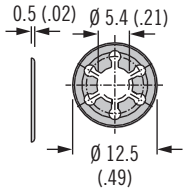

Retainer Push-On, Plastic

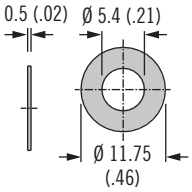

Cupped Washer

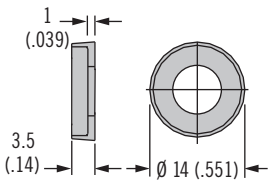

Ejector Spring

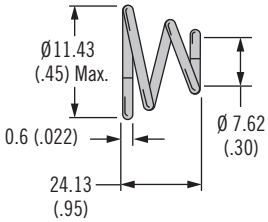

Ejector Spring and Cup Assembly

(Must be secured with stainless steel retainer)

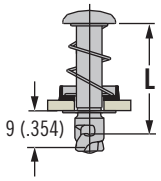

Type	Part Number	Material	Adjustment Value
Push-on plastic	D8-326-100-040	High density polyethylene, black	Included in TMT calculation
Push-on	D8-326-101-200	Stainless steel	
Cupped washer	D8-376-001-049	Thermoplastic, black	Add 1.00 (.039)
Ejector spring	D4-EHF5-3-950QA	Stainless steel	Add 1.00 (.039)

Retainer Spring (Must be secured with steel retainer)

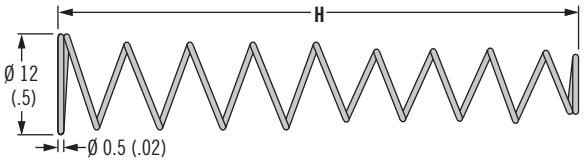

With Retaining Spring

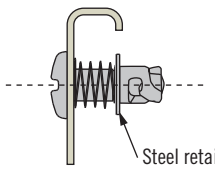

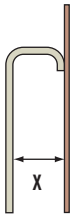

Without Retaining Spring

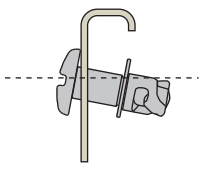

Part Number	H	X Min.	X Max.
D8-326-200-200	48 (1.89)	19 (.75)	44 (1.73)
D8-326-201-200	25 (.98)	5 (.197)	21 (.83)

Material and Finish

See table

Accessories

When using the ejecting version add 2 (.079) to your TMT

Notes

Cupped washer only available for tool recess head styles (slot, Phillips, hex, tamper resistant)

Assembly consists of spring, cup and stud ordered separately, shipped bulk

Part Number

See table

D8 *DZUS® PANEX* Quarter-Turn Fasteners

Studs · Size 9

Material and Finish

Studs: Steel, zinc plated and chromate or chrome plated

H Head Styles - Tool Actuated

Oval Slot

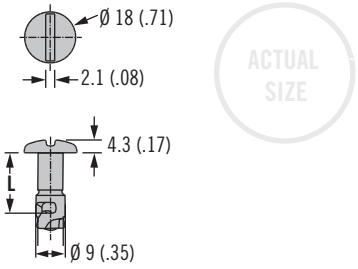

Hex Recess

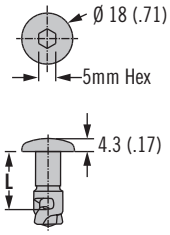

Phillips Recess

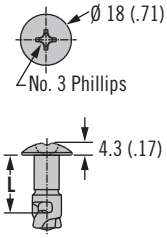

H Head Styles - Hand Actuated

Wing

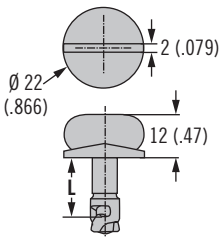

Bail

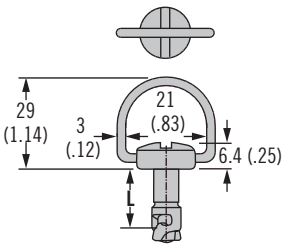

Stud Panel Preparation

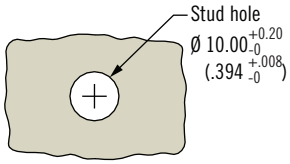

Dimensions in millimeters (inch) unless otherwise stated

D8 *DZUS® PANEX* Quarter-Turn Fasteners

Stud selection · Size 9

H Head style
- **1** Slot recess
- **2** Hex recess
- **3** Wing
- **4** Bail
- **7** Phillips recess

K Length
Enter number from selection table below

F Finish
- **170** Chrome plated
- **190** Zinc plated
- **191** Zinc plated, black

D8 - 319 - H K - F

Stud Length Table					
A		B		K	L ±.15 (.006)
TMT Range For: D8-339-400-121 D8-339-500-121 D8-339-300-121 D8-339-301-121 D8-339-305-121		TMT Range For: D8-339-200-190			
Min.	Max.	Min.	Max.		
3.0 (.12)	3.9 (.15)	~	~	**11**	11 (.433)
4.0 (.16)	4.9 (.19)	~	~	**12**	12 (.472)
5.0 (.20)	5.9 (.23)	~	~	**13**	13 (.512)
6.0(.24)	6.9 (.27)	~	~	**14**	14 (.551)
7.0 (.28)	7.9 (.31)	~	~	**15**	15 (.591)
8.0 (.31)	8.9 (.35)	~	~	**16**	16 (.630)
9.0 (.35)	9.9 (.39)	~	~	**17**	17 (.669)
10.0 (.39)	10.9 (.43)	~	~	**18**	18 (.709)
11.0 (.43)	11.9 (.47)	~	~	**19**	19 (.748)
12.0 (.47)	12.9 (.51)	~	~	**20**	20 (.787)
13.0 (.51)	13.9 (.55)	~	~	**21**	21 (.827)
14.0 (.55)	14.9 (.59)	2.5 (.10)	3.4 (.13)	**22**	22 (.866)
15.0 (.59)	15.9 (.63)	3.5 (.14)	4.4 (.17)	**23**	23 (.906)
16.0 (.63)	16.9 (.67)	4.5 (.18)	5.4 (.21)	**24**	24 (.945)
17.0 (.67)	17.9 (.70)	5.5 (.22)	6.4 (.25)	**25**	25 (.984)
18.0 (.71)	18.9 (.74)	6.5 (.26)	7.4 (.29)	**26**	26 (1.02)
19.0 (.75)	19.9 (.78)	7.5 (.30)	8.4 (.33)	**27**	27 (1.06)
20.0 (.79)	20.9 (.82)	8.5 (.33)	9.4 (.37)	**28**	28 (1.10)
21.0 (.83)	21.9 (.86)	9.5 (.37)	10.4 (.41)	**29**	29 (1.14)
22.0 (.87)	22.9 (.90)	10.5 (.41)	11.4 (.45)	**30**	30 (1.18)

Part Number Selection

To select correct fastener:

1. Select receptacle
Choose a receptacle from pages 464-466

2. Select retainer and accessories
from page 467 and note any adjustment values

3. Specify stud length
Calculate the total material thickness (TMT) using the formula given for the receptacle selected. Find the range of TMT using the stud length selection table (left) using the column (A, or B) given for the receptacle selected.

4. Complete the stud part number
by specifying the head style H, stud length K, and material M

Example:
For rivet-on
D8-339-400-121 use column A
For TMT value calculated as 5.2 (.206), K = 13
For slotted head style in steel, zinc plated material, completed part number: D8-319-113-190
A complete example can be found on page 435.

Notes
Stainless steel material may require a higher minimum order quantity. Contact Southco for details.

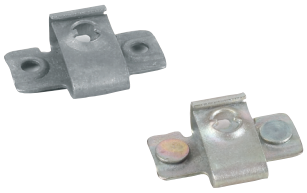

D8 *DZUS® PANEX* Quarter-Turn Fasteners

Receptacles · Size 9

Material and Finish

Steel, zinc immersion coating

Installation Notes

Install with Ø 3 (.125) rivets

Part Number

See table

Notes

Utilize stud selection column indicated when choosing a stud length from the stud length table on page 463

Rivet-On

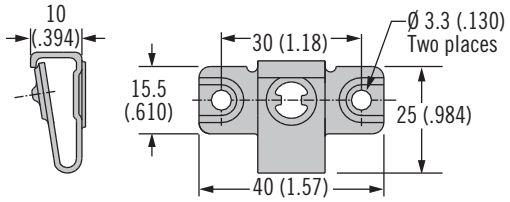

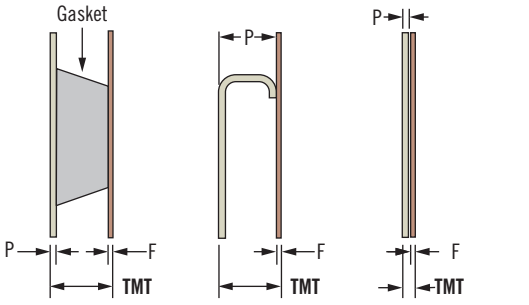

ACTUAL SIZE

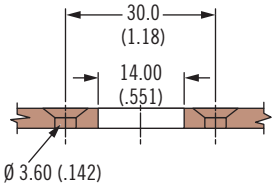

Part Number	Stud Selection Column
D8-339-400-121	A

Weld-On

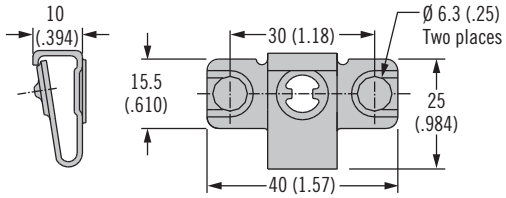

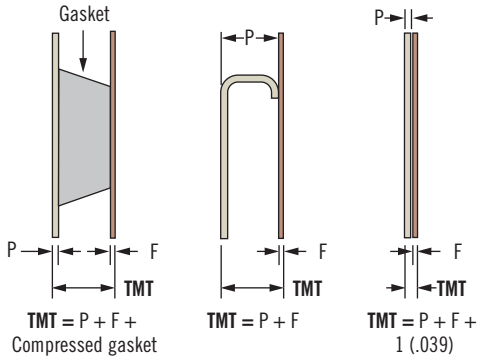

ACTUAL SIZE

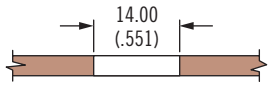

Part Number	Stud Selection Column
D8-339-500-121	A

Dimensions in millimeters (inch) unless otherwise stated

D8 *DZUS® PANEX* Quarter-Turn Fasteners

Receptacles · Size 9

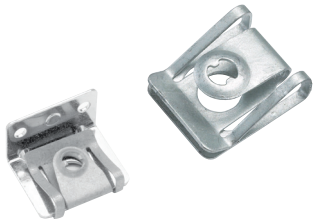

Side Mount

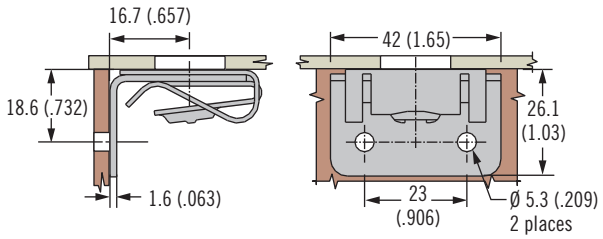

Part Number	Stud Selection Column
D8-339-305-121	A

Material and Finish

Steel, zinc immersion coating

Part Number

See table

Notes

Utilize stud selection column indicated when choosing a stud length from the stud length table on page 463

Clip-On

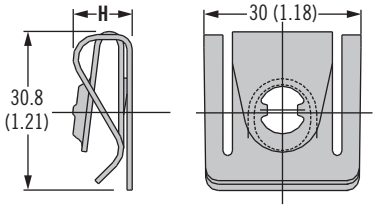

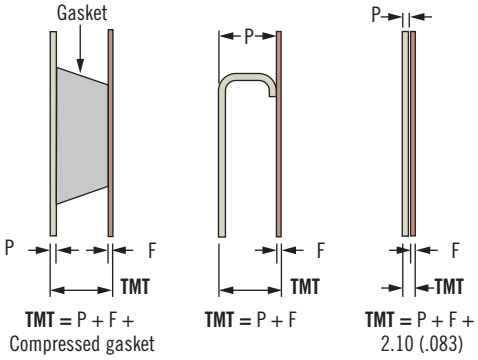

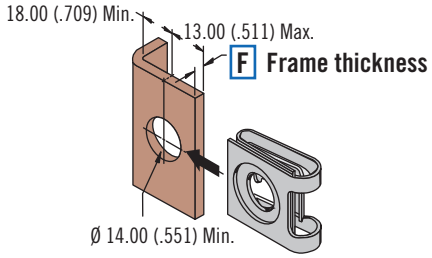

F Frame Thickness Range	Part Number	H	Stud Selection Column
0.7 - 3.2 (.028 - .126)	D8-339-300-121	10.7 (.421)	A
3.2 - 5.5 (.126 - .217)	D8-339-301-121	11.3 (.445)	

Material and Finish

Steel, zinc immersion coating

Part Number

See table

Notes

Utilize stud selection column indicated when choosing a stud length from the stud length table on page 463

D8 *DZUS® PANEX* Quarter-Turn Fasteners

Receptacles · Size 9

Material and Finish

Steel, zinc plated

Front Mount

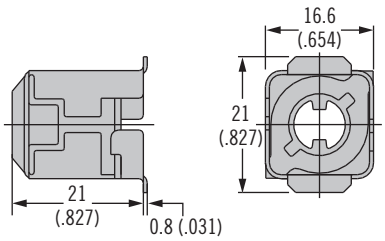

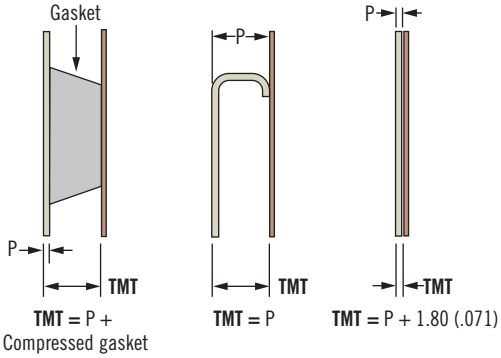

ACTUAL SIZE

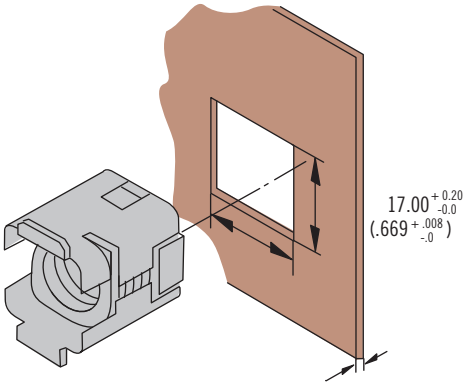

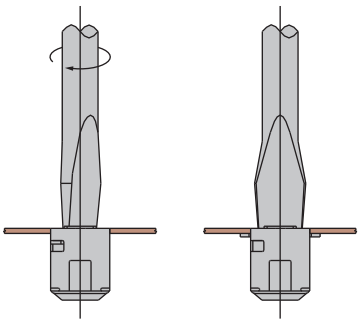

Part Number

See table

Type	Part Number	Stud Selection Column
Front mount	D8-339-200-190	**B**

Notes

Utilize stud selection column indicated when choosing a stud length from the stud length table on page 463

Dimensions in millimeters (inch) unless otherwise stated

Retainer Push-On, Plastic

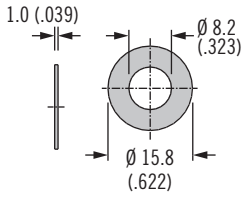

Retainer Push-On, Steel

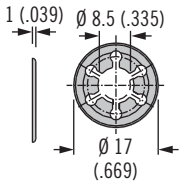

Type	Part Number	Material	Adjustment Value
Push-on Plastic	D8-329-101-040	Nylon 6/6 Black	Included in TMT calculation
Push-on	D8-329-101-200	Stainless steel	

Retainer Spring (Must be secured with steel retainer)

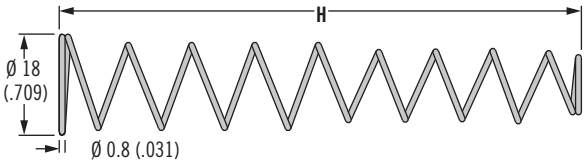

With Retaining Spring

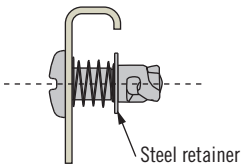

Without Retaining Spring

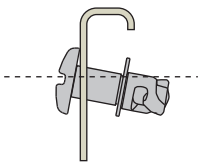

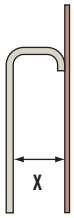

Part Number	H	X Min.	X Max.
D8-329-200-200	48 (1.89)	7 (.276)	43 (1.69)

Material and Finish

See table

D9 *DZUS*® Tech Line Quarter-Turn Fasteners

D9-47 Stud Assemblies · Press-in style

- **Designed for hand operation**
- **Spring ejected**
- **Wide variety of receptacle options**

Material and Finish

Stud and ferrule: Steel, hardened, zinc plated plus sealer
Spring: Music wire, zinc plated
Knob: Aluminum, natural or black powder coated

Installation Notes

1. Prepare panel as shown. Top edge of hole should be sharp.
2. Press stud assembly into panel until ferrule is installed as shown.
3. See page 627 for more installation guidelines.

Part Number

See table

Black Knob Option

For black powdered coated knob, add "000" to the part number.
Example:
D9-47-1301-K, natural
D9-47-1301-K000, black

Receptacle Details

See page 471

Notes

To ensure you receive *SOUTHCO*® quality parts, look for the segmented circle.

Press-in Style Stud Assembly

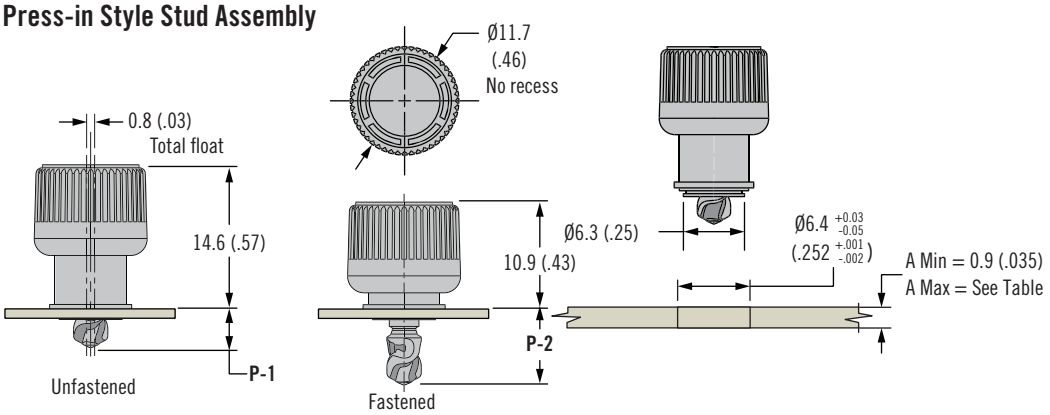

Stud Length Table

A: Flat receptacle D9-61-11 mounted below panel			B: Flat receptacle D9-61-11 mounted above panel			C: Saddle receptacle D9-62-11			D: Press-in receptacle D9-63-11			Stud Assemblies			
TMT Range			TMT Range			TMT Range			TMT Range						
Min	Nom-inal	Max	Min	Nom-inal	Max	Min	Nom-inal	Max	Min	Nom-inal	Max	P-1	P-2	Stud Length	Part Number
2.1 (.08)	2.8 (.11)	3.0 (.12)	2.9 (.11)	3.6 (.14)	3.8 (.15)	5.3 (.21)	6.0 (.24)	6.2 (.24)	1.4 (.06)	2.1 (.08)	2.3 (.09)	4.6 (.18)	8.3 (.33)	1	D9-47-1301-K
3.1 (.12)	3.8 (.15)	4.0 (.16)	3.9 (.15)	4.6 (.18)	4.8 (.19)	6.3 (.25)	7.0 (.28)	7.2 (.28)	2.4 (.09)	3.1 (.12)	3.3 (.13)	5.6 (.22)	9.3 (.37)	2	D9-47-1302-K
4.1 (.16)	4.8 (.19)	5.0 (.20)	4.9 (.19)	5.6 (.22)	5.8 (.23)	7.3 (.29)	8.0 (.31)	8.2 (.32)	3.4 (.13)	4.1 (.16)	4.3 (.17)	6.6 (.26)	10.3 (.41)	3	D9-47-1303-K
5.1 (.20)	5.8 (.23)	6.0 (.24)	5.9 (.23)	6.6 (.26)	6.8 (.27)	8.3 (.33)	9.0 (.35)	9.2 (.36)	4.4 (.17)	5.1 (.20)	5.3 (.21)	7.6 (.30)	11.3 (.44)	4	D9-47-1304-K

Receptacle Types (Stud Assembly shown fastened for P-2 = 8.75 (.34) all views)
Q = 0.9 (.035) MIN Frame (all receptacle views)

Column A

With flat receptacle D9-61-11 mounted below panel

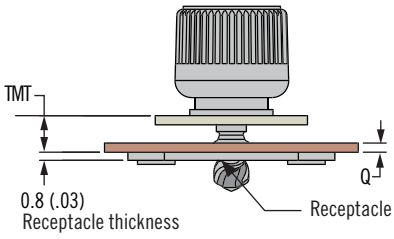

Column B

With flat receptacle D9-61-11 mounted above panel

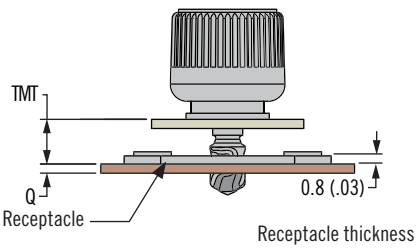

Column C

With saddle receptacle D9-62-11

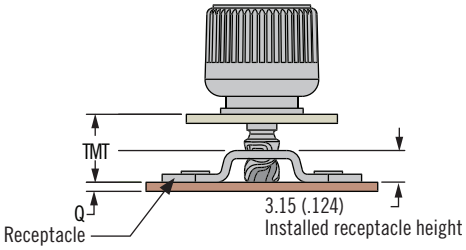

Column D

With press-in receptacle D9-63-11

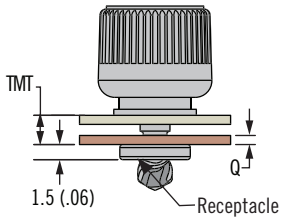

Dimensions in millimeters (inch) unless otherwise stated

DZUS® | southco®

D9 *DZUS*® Tech Line Quarter-Turn Fasteners

D9-47 Stud Assemblies · Flare-in style

Flare-in Style Stud Assembly

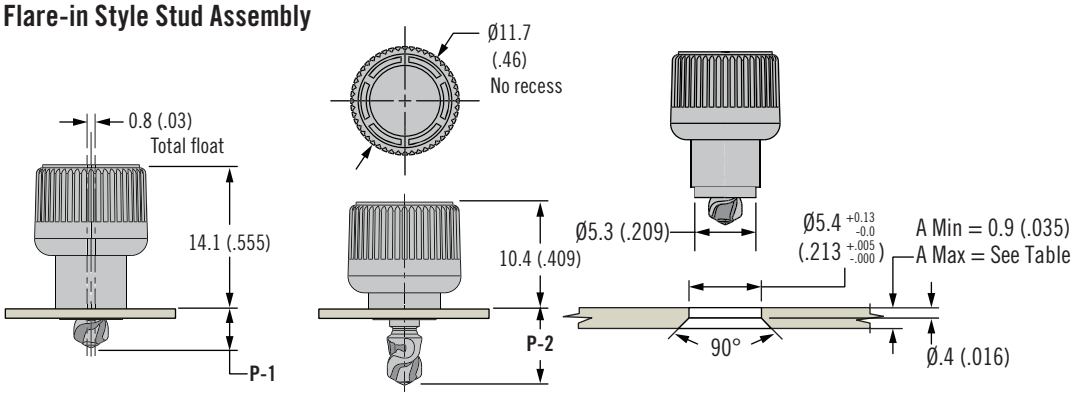

Stud Length Table															
A			B			C			D			Stud Assemblies			
Flat receptacle D9-61-11 mounted below panel			Flat receptacle D9-61-11 mounted above panel			Saddle receptacle D9-62-11			Press-in receptacle D9-63-11						
TMT Range			TMT Range			TMT Range			TMT Range						
Min	Nom-inal	Max	Min	Nom-inal	Max	Min	Nom-inal	Max	Min	Nom-inal	Max	P-1	P-2	Stud Length	Part Number
2.1 (.08)	2.8 (.11)	3.0 (.12)	2.9 (.11)	3.6 (.14)	3.8 (.15)	5.3 (.21)	6.0 (.24)	6.2 (.24)	1.4 (.06)	2.1 (.08)	2.3 (.09)	4.6 (.18)	8.3 (.33)	1	D9-47-3301-K
3.1 (.12)	3.8 (.15)	4.0 (.16)	3.9 (.15)	4.6 (.18)	4.8 (.19)	6.3 (.25)	7.0 (.28)	7.2 (.28)	2.4 (.09)	3.1 (.12)	3.3 (.13)	5.6 (.22)	9.3 (.37)	2	D9-47-3302-K
4.1 (.16)	4.8 (.19)	5.0 (.20)	4.9 (.19)	5.6 (.22)	5.8 (.23)	7.3 (.29)	8.0 (.31)	8.2 (.32)	3.4 (.13)	4.1 (.16)	4.3 (.17)	6.6 (.26)	10.3 (.41)	3	D9-47-3303-K
5.1 (.20)	5.8 (.23)	6.0 (.24)	5.9 (.23)	6.6 (.26)	6.8 (.27)	8.3 (.33)	9.0 (.35)	9.2 (.36)	4.4 (.17)	5.1 (.20)	5.3 (.21)	7.6 (.30)	11.3 (.44)	4	D9-47-3304-K

Receptacle Types (Stud Assemby shown fastened for P-2 = 9.3 (.366) all views)
Q = 0.9 (.035) MIN Frame (all receptacle views)

Column A

With flat receptacle D9-61-11 mounted below panel

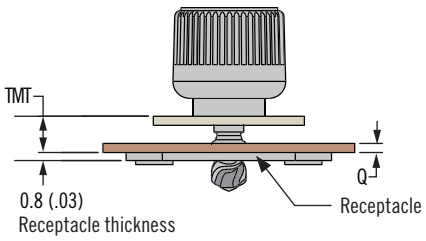

Column B

With flat receptacle D9-61-11 mounted above panel

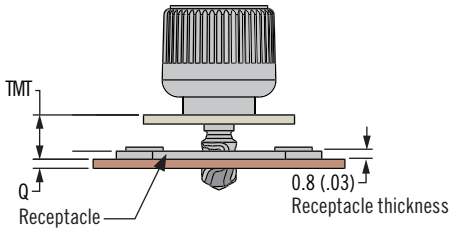

Column C

With saddle receptacle D9-62-11

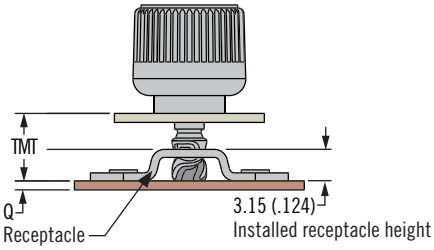

Column D

With press-in receptacle D9-63-11

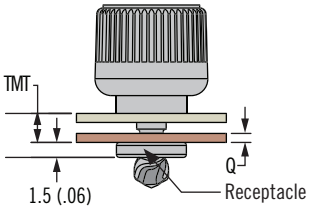

- **Designed for hand operation**
- **Spring ejected**
- **Wide variety of receptacle options**

Material and Finish

Stud: Steel, hardened, zinc plated plus sealer
Spring: Music wire, zinc plated
Knob: Aluminum, natural or black powder coated
Ferrule: Aluminum, natural

Installation Notes

1. Drill then counter-sink panel as shown.
2. Insert stud assembly into prepared hole in panel and flare stand-off using tool 47-106. Use LIGHT pressure

Part Number

See table

Black Knob Option

For black powdered coated knob, add "000" to the part number.
Example:
D9-47-3301-K, natural
D9-47-3301-K000, black

Receptacle Details

See page 471

Notes

To ensure you receive *SOUTHCO*® quality parts, look for the segmented circle.

DZUS® | southco®

Dimensions in millimeters (inch) unless otherwise stated

D9 *DZUS*® Tech Line Quarter-Turn Fasteners

D9-47 Stud Assemblies · Surface Mount Technology (SMT) style

- **Designed for hand operation**
- **Spring ejected**
- **Wide variety of receptacle options**

Material and Finish

Stud: Steel, hardened, zinc plated plus sealer
Spring: Music wire, zinc plated
Knob: Aluminum, natural or black powder coated
Retainer (not shown): Plastic
Ferrule: Steel, tin plated

Installation Notes

Visit www.southco.com for additional installation guidelines

Part Number

See table

Black Knob Option

For black powdered coated knob, add "000" to the part number.
Example:
D9-47-2301-K-R, natural
D9-47-2301-K000-R, black

Specify Package Option

Package Details
Stud Assemblies shipped in Reel Package

Receptacle Details

See page 471

Notes

To ensure you receive *SOUTHCO*® quality parts, look for the segmented circle.

SMT Style Stud Assembly

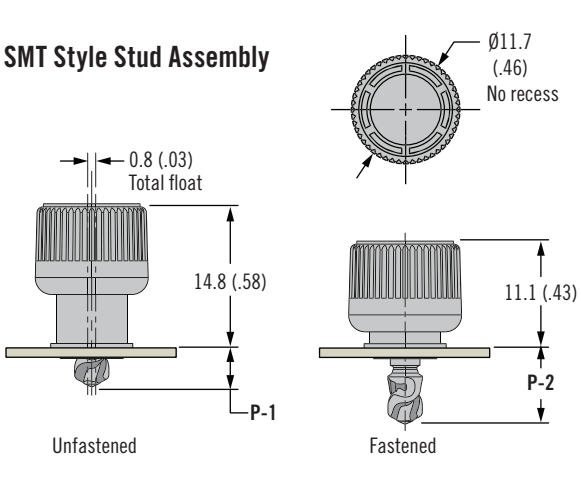

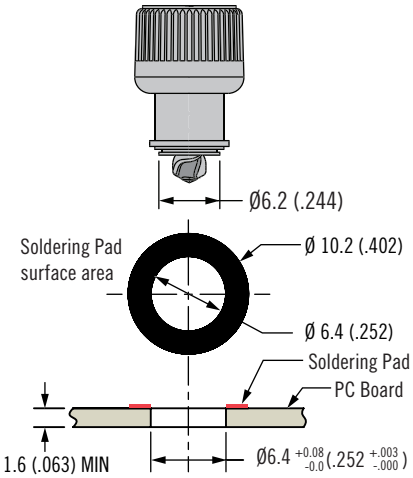

Stud Length Table															
A			B			C			D			Stud Assemblies			
Flat receptacle D9-61-11 mounted below panel			Flat receptacle D9-61-11 mounted above panel			Saddle receptacle D9-62-11			Press-in receptacle D9-63-11						
TMT Range			TMT Range			TMT Range			TMT Range						
Min	Nom-inal	Max	Min	Nom-inal	Max	Min	Nom-inal	Max	Min	Nom-inal	Max	P-1	P-2	Stud Length	Part Number
Stud length not viable			2.2 (.09)	2.9 (.11)	3.1 (.12)	4.55 (.18)	5.25 (.21)	5.45 (.21)	Stud length not viable			3.8 (.15)	7.45 (.29)	1	D9-47-2301-K-R
2.4 (.09)	3.1 (.12)	3.3 (.13)	3.2 (.13)	3.9 (.15)	4.1 (.16)	5.55 (.22)	6.25 (.25)	6.45 (.25)	Stud length not viable			4.8 (.19)	8.45 (.33)	2	D9-47-2302-K-R
3.4 (.13)	4.1 (.16)	4.3 (.17)	4.2 (.17)	4.9 (.19)	5.1 (.20)	6.55 (.26)	7.25 (.29)	7.45 (.29)	1.8 (.07)	2.5 (.10)	2.7 (.11)	5.8 (.23)	9.45 (.37)	3	D9-47-2303-K-R
4.4 (.17)	5.1 (.20)	5.3 (.21)	5.2 (.20)	5.9 (.23)	6.1 (.24)	7.55 (.30)	8.25 (.32)	8.45 (.33)	2.8 (.11)	3.5 (.14)	3.7 (.15)	6.8 (.27)	10.45 (.41)	4	D9-47-2304-K-R

Receptacle Types (Stud Assemby shown fastened for P-2 = 8.45 (.333) all views)
Q = 0.9 (.035) MIN Frame (all receptacle views)

Column A

With flat receptacle D9-61-11 mounted below panel

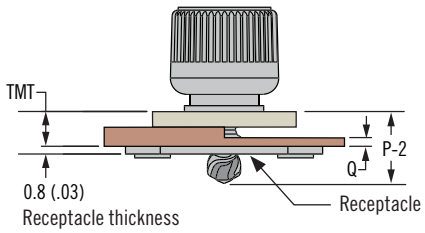

Column B

With flat receptacle D9-61-11 mounted above panel

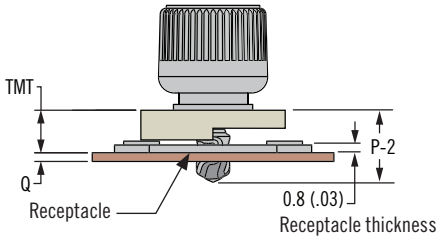

Column C

With saddle receptacle D9-62-11

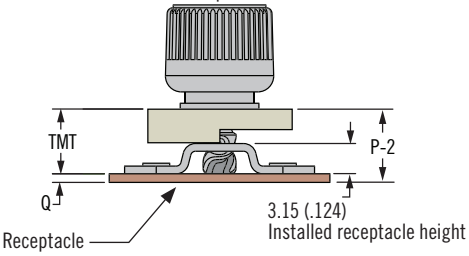

Column D

With press-in receptacle D9-63-11

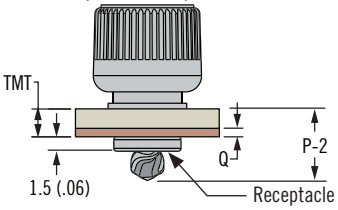

Dimensions in millimeters (inch) unless otherwise stated

DZUS® | southco®

Flat Type Receptacle

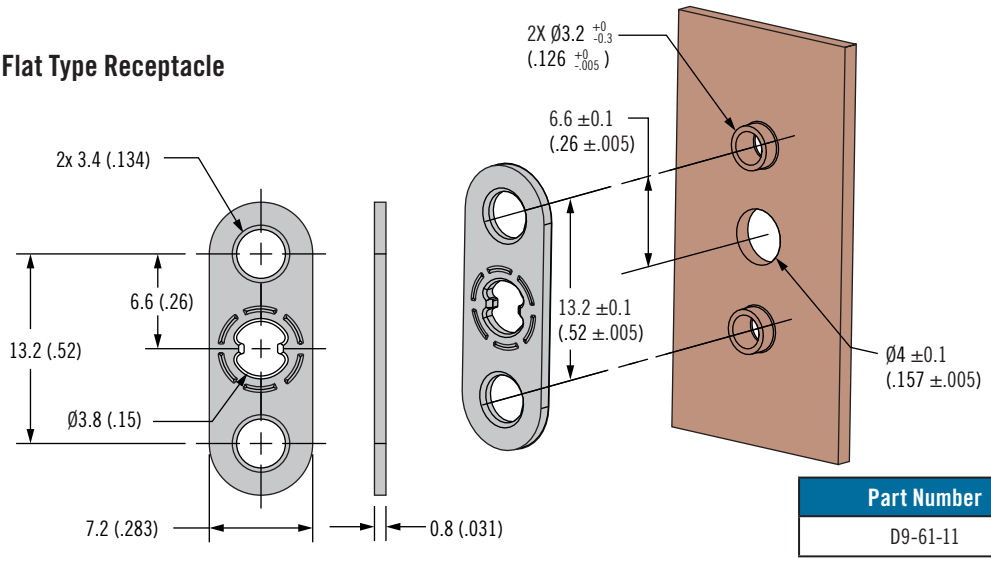

Part Number
D9-61-11

Material and Finish
Steel, zinc plate

Suitable for use with all assembly styles and stud lengths

Part Number
See table

Saddle Type Receptacle

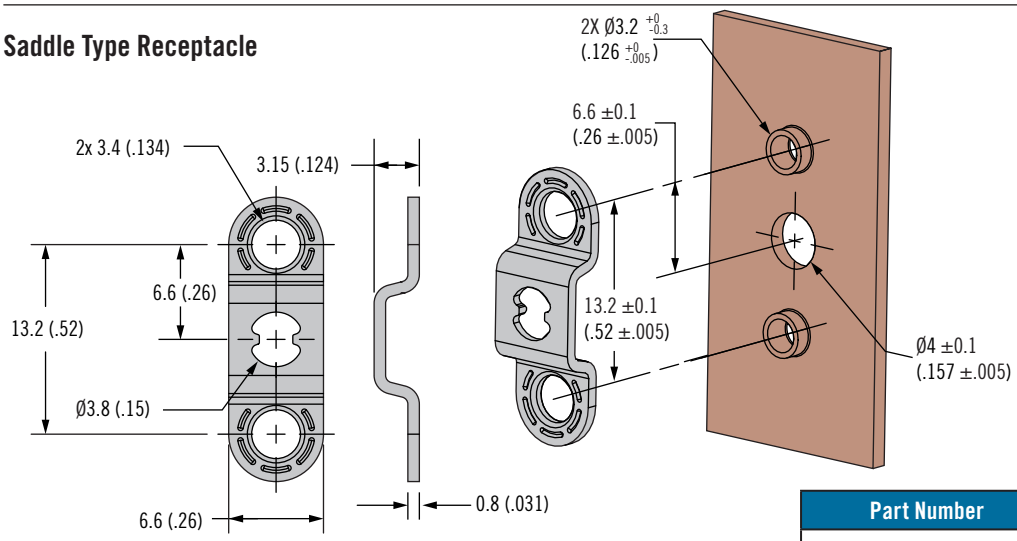

Part Number
D9-62-11

Material and Finish
Steel, zinc plate

Suitable for use with all assembly styles and stud lengths

Part Number
See table

Self-Clinching Type Receptacle

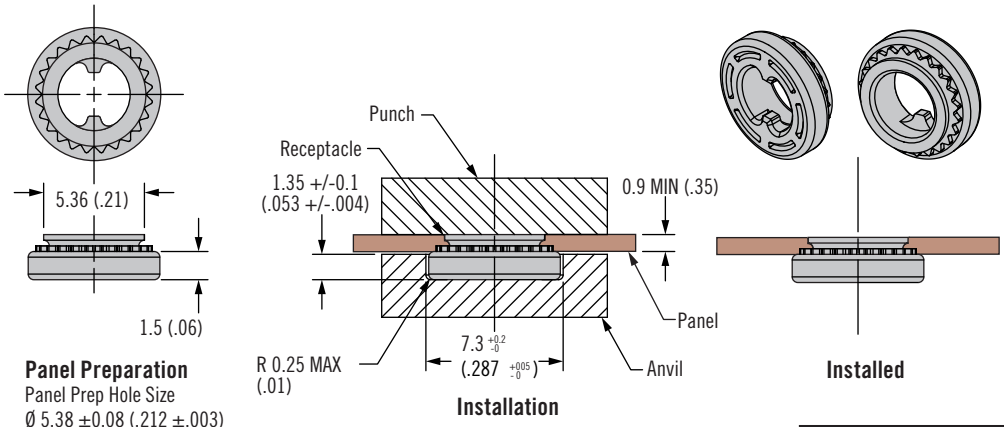

Panel Preparation
Panel Prep Hole Size
Ø 5.38 ±0.08 (.212 ±.003)

Installation

Part Number
D9-63-11

Material and Finish
Steel, zinc plate plus sealer

Installation Notes
1. Drill or punch panel prep hole.
2. Place receptacle into anvil and put panel over lip of receptacle
3. While keeping punch and anvil parallel, apply force until shoulder of receptacle contacts panel. Recommended load of 13,400 N (3000 lbf) for steel, Rb 70 max, 11,200 N (2500 lbf) for aluminum

Part Number
See table

D9 *DZUS*® Tech Line Quarter-Turn Fasteners

D9-52 Stud Assemblies · Press-in style

- **Designed for hand or tool operation**
- **Spring ejected**
- **Wide variety of receptacle options**
- **Designate access points with color**

Material and Finish

Stud: Hardened carbon steel, zinc plated, chromate, plus sealer
Spring: Music wire, zinc plated
Standoff: Carbon steel, zinc plated, chromate, plus sealer
Prism: PC/ABS

Press-in Style Stud Assembly

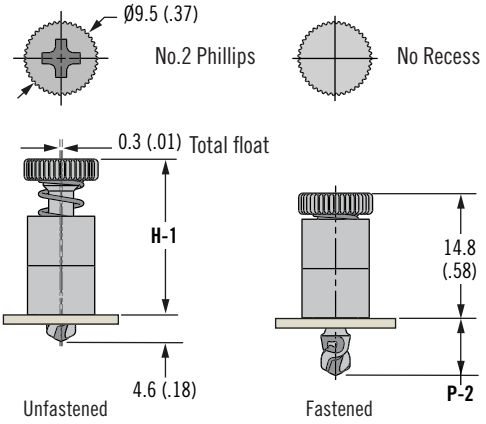

Installation

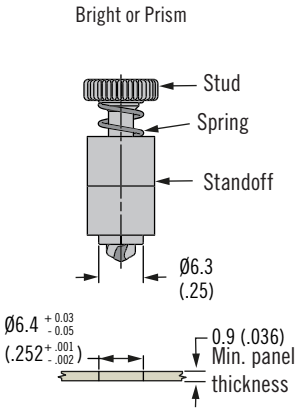

000 Black
008 Blue
013 Red
014 Green
Your color (contact Southco)

Stud Length Table

A	B	C	D	Stud Assemblies					
Flat receptacle D9-61-11 mounted below panel	Flat receptacle D9-61-11 mounted above panel	Saddle receptacle D9-62-11	Press-in receptacle D9-63-11						
TMT Range	TMT Range	TMT Range	TMT Range	P-2	H-1	Part Number, Press-in			
						Bright Head		Prism Head	
Min / Nom-inal / Max	Min / Nom-inal / Max	Min / Nom-inal / Max	Min / Nom-inal / Max			No Recess	Phillips Recess	No Recess	Phillips Recess
2.1 (.08) / 2.8 (.11) / 3.0 (.12)	2.9 (.11) / 3.6 (.14) / 3.8 (.15)	5.3 (.21) / 6.0 (.24) / 6.2 (.24)	1.4 (.06) / 2.1 (.08) / 2.3 (.09)	8.3 (.33)	18.5 (.73)	D9-52-1301-K	D9-52-1311-K	D9-52-1301-K000	D9-52-1311-K000
3.1 (.12) / 3.8 (.15) / 4.0 (.16)	3.9 (.15) / 4.6 (.18) / 4.8 (.19)	6.3 (.25) / 7.0 (.28) / 7.2 (.28)	2.4 (.09) / 3.1 (.12) / 3.3 (.13)	9.3 (.37)	19.5 (.77)	D9-52-1302-K	D9-52-1312-K	D9-52-1302-K000	D9-52-1312-K000
4.1 (.16) / 4.8 (.19) / 5.0 (.20)	4.9 (.19) / 5.6 (.22) / 5.8 (.23)	7.3 (.29) / 8.0 (.31) / 8.2 (.32)	3.4 (.13) / 4.1 (.16) / 4.3 (.17)	10.3 (.41)	20.5 (.81)	D9-52-1303-K	D9-52-1313-K	D9-52-1303-K000	D9-52-1313-K000
5.1 (.20) / 5.8 (.23) / 6.0 (.24)	5.9 (.23) / 6.6 (.26) / 6.8 (.27)	8.3 (.33) / 9.0 (.35) / 9.2 (.36)	4.4 (.17) / 5.1 (.20) / 5.3 (.21)	11.3 (.44)	21.5 (.85)	D9-52-1304-K	D9-52-1314-K	D9-52-1304-K000	D9-52-1314-K000

Q=0.9 (.035) MIN Frame Thickness (All receptacle views)

Installation notes:

1. Prepare panel as shown. Top edge of hole should be sharp.
2. Press stud assembly into panel until Standoff is installed as shown.
3. See page 627 for more installation guidelines.

Specifying Prism Color:

To indicate color, change the last three digits of the part number.
Example D9-52-1301-K000, black, D9-52-1301-K013, red
Receptacle Details See page 471

Column A
Flat receptacle D9-61-11 mounted below panel

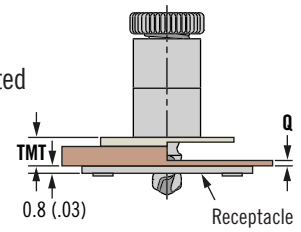

Column B
Flat receptacle D9-61-11 mounted above panel

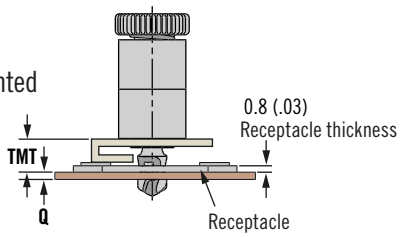

Column C
Saddle receptacle D9-62-11

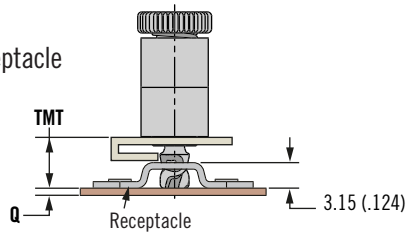

Column D
Press-in receptacle D9-63-11

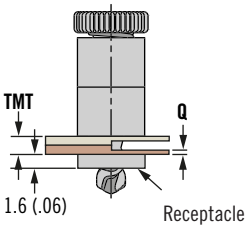

Dimensions in millimeters (inch) unless otherwise stated

DZUS® | southco®

D9 *DZUS*® Tech Line Quarter-Turn Fasteners

D9-52 Stud Assemblies · Flare-in Style

Flare-in Style Stud Assembly

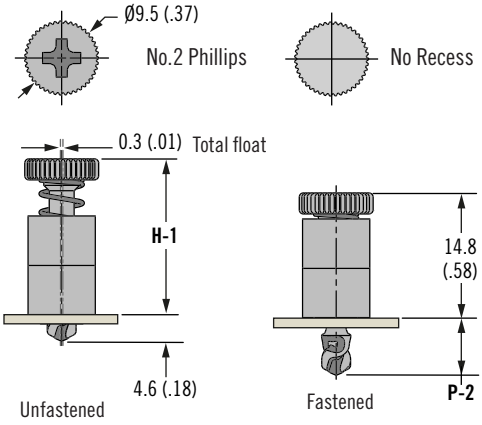

Installation

Bright or Prism

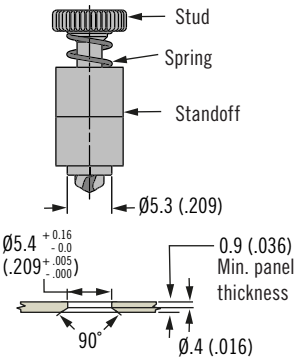

000 Black

008 Blue

013 Red

014 Green

Your color (contact Southco)

- **Designed for hand or tool operation**
- **Spring ejected**
- **Wide variety of receptacle options**
- **Designate access points with color**

Material and Finish

Stud: Steel, hardened, zinc plated plus sealer
Spring: Music wire, zinc plated
Standoff: Aluminum, natural
Prism: PC/ABS

Stud Length Table

A			B			C			D			Stud Assemblies					
Flat receptacle D9-61-11 mounted below panel			Flat receptacle D9-61-11 mounted above panel			Saddle receptacle D9-62-11			Press-in receptacle D9-63-11								
TMT Range			TMT Range			TMT Range			TMT Range			P-2	H-1	Part Number, Press-in			
														Bright Head		Prism Head	
Min	Nominal	Max	Min	Nominal	Max	Min	Nominal	Max	Min	Nominal	Max			No Recess	Phillips Recess	No Recess	Phillips Recess
2.1 (.08)	2.8 (.11)	3.0 (.12)	2.9 (.11)	3.6 (.14)	3.8 (.15)	5.3 (.21)	6.0 (.24)	6.2 (.24)	1.4 (.06)	2.1 (.08)	2.3 (.09)	8.3 (.33)	18.5 (.73)	D9-52-3301-K	D9-52-3311-K	D9-52-3301-K000	D9-52-3311-K000
3.1 (.12)	3.8 (.15)	4.0 (.16)	3.9 (.15)	4.6 (.18)	4.8 (.19)	6.3 (.25)	7.0 (.28)	7.2 (.28)	2.4 (.09)	3.1 (.12)	3.3 (.13)	9.3 (.37)	19.5 (.77)	D9-52-3302-K	D9-52-3312-K	D9-52-3302-K000	D9-52-3312-K000
4.1 (.16)	4.8 (.19)	5.0 (.20)	4.9 (.19)	5.6 (.22)	5.8 (.23)	7.3 (.29)	8.0 (.31)	8.2 (.32)	3.4 (.13)	4.1 (.16)	4.3 (.17)	10.3 (.41)	20.5 (.81)	D9-52-3303-K	D9-52-3333-K	D9-52-3303-K000	D9-52-3333-K000
5.1 (.20)	5.8 (.23)	6.0 (.24)	5.9 (.23)	6.6 (.26)	6.8 (.27)	8.3 (.33)	9.0 (.35)	9.2 (.36)	4.4 (.17)	5.1 (.20)	5.3 (.21)	11.3 (.44)	21.5 (.85)	D9-52-3304-K	D9-52-3314-K	D9-52-3304-K000	D9-52-3314-K000

Q=0.9 (.035) MIN Frame Thickness (All receptacle views)

Column A
Flat receptacle D9-61-11 mounted below panel

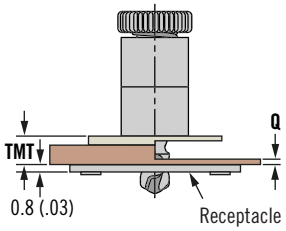

Column B
Flat receptacle D9-61-11 mounted above panel

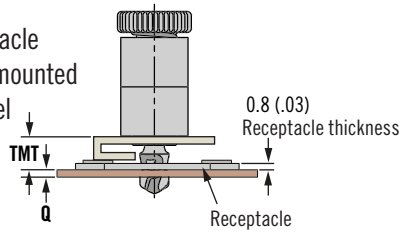

Column C
Saddle receptacle D9-62-11

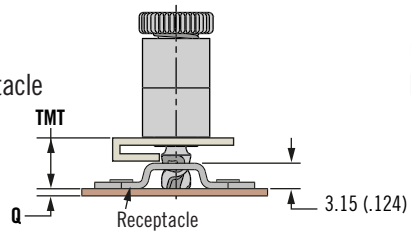

Column D
Press-in receptacle D9-63-11

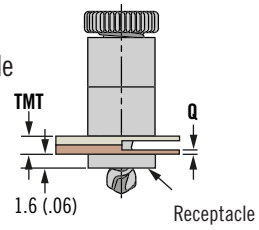

Installation notes:

1. Drill then counter-sink panel as shown.
2. Insert stud assembly into prepared hole in panel and flare stand-off using tool 47-106. Use LIGHT pressure

Specifying Prism Color:

To indicate color, change the last three digits of the part number.
Example D9-52-1311-K**000**, black,
D9-52-1311-K**013**, red
Receptacle Details See page 471

D9 - *DZUS*® Tech Line Quick Access Fasteners

D9-PR PCI Riser Cage Fastener Assembly

- **Designed for 2U Servers**
- **Hand operation**
- **Spring ejected**
- **Wide variety of receptacle options**

Fastener Assembly Material and Finish

Cap: UL94-V0 PA6
Assembly Cover:PC-ABS, black
Pin, Washer:Stainless steel, passivate Lower Stud, Bracket, Clip: Steel, zinc plate Rotation Limiter, Upper Stud: Zinc alloy, chromate sealer

Installation Notes

Maximum installation torque of mounting screws to attach assembly covers
0.7 Nm (6 in-lbs) using M3 screws.

Performance Details

Maximun torque to be applied to cap is 1.1 Nm (10 in-lbs)

Part Numbers

See tables

Receptacle Details

(order separately)
See page 471

Fastener Assembly

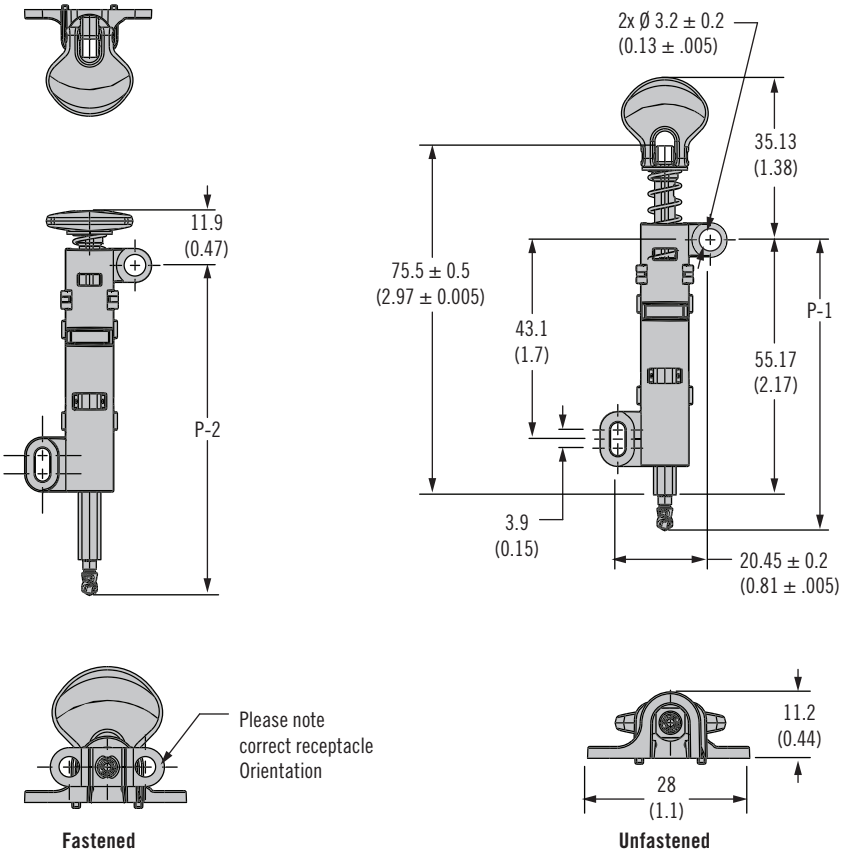

Fastened **Unfastened**

To fasten, push on cap to place lower stud into receptacle and turn cap 180° and fold down.

Part Number	TMT	P-1	P-2	Cap Color
D9-PR-20-000	4.25 (0.16)	62.4 ± 1.2 (2.45 ± 0.04)	70.9 ± 1.2 (2.78 ± 0.04)	Black
D9-PR-20-072				Blue
D9-PR-21-000	4.45 (0.17)	62.6 ± 1.2 (2.46 ± 0.04)	71.1 ± 1.2 (2.79 ± 0.04)	Black
D9-PR-21-072				Blue
D9-PR-22-000	4.65 (0.18)	62.8 ± 1.2 (2.47 ± 0.04)	71.3 ± 1.2 (2.80 ± 0.04)	Black
D9-PR-22-072				Blue

TMT = Customer panel thickness + Customer PCB thickness + Southco receptacle thickness + Southco gasket compressed thickness (0.55 mm)

Gasket

Part Number	Material	Color
D9-81 (order separately)	High density foam	Gray

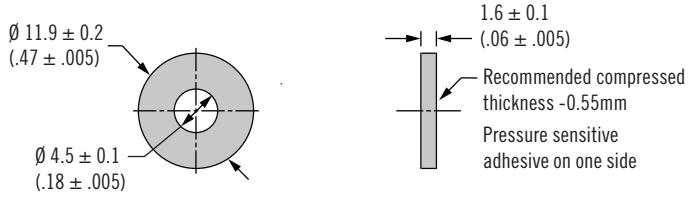

Dimensions in millimeters (inch) unless otherwise stated

D9 - *DZUS*® Tech Line Quick Access Fasteners

D9-PR PCI Riser Cage Fastener Assembly

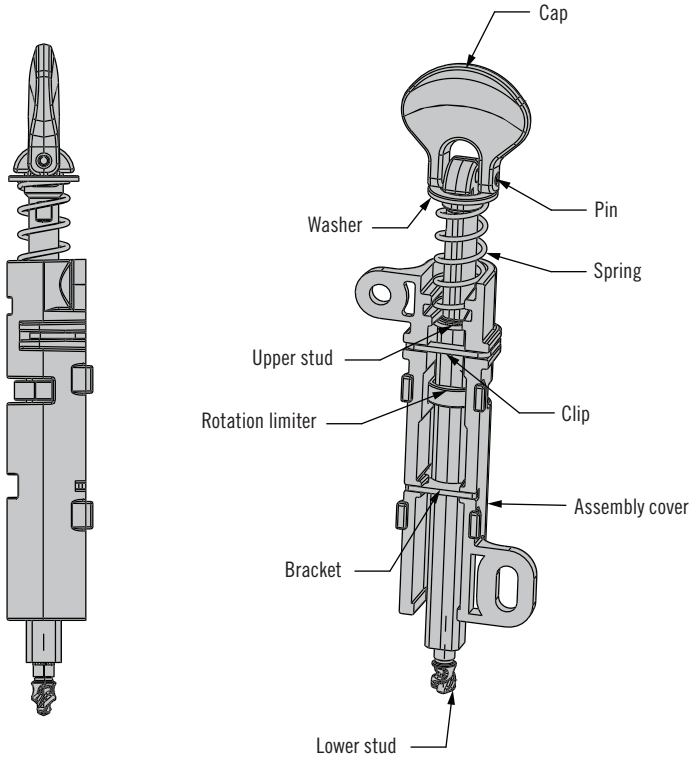

Panel Preparation

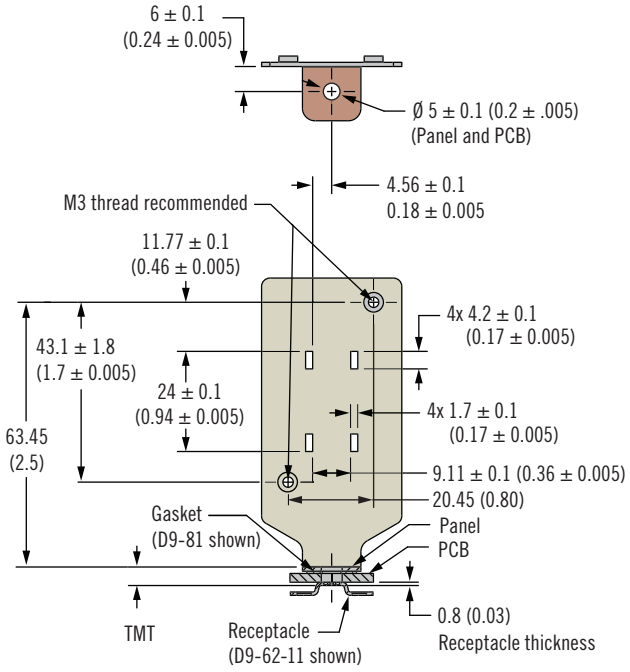

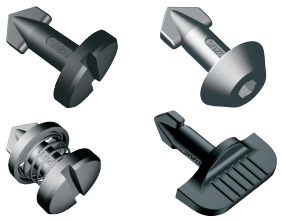

D1 *DZUS*® Dart Quarter-Turn Fasteners

Studs, Glass-filled nylon

Material and Finish

Glass-filled nylon, black

Adjustment formula

Add 2.3 (.090) to panel thickness and recalculate your TMT when using self-ejecting stud assembly

To select correct fastener:

1. Select receptacle

Choose a receptacle from pages 475-477

2. Select retainer and accessories

from page 477 and note any adjustment values

3. Specify stud length

Calculate the total material thickness (TMT) using the formula given for the receptacle selected. Find the range of TMT using the stud length selection table (right) using the column (A, B, C, or D) given for the receptacle selected.

4. Complete the stud part number

by specifying the head style H, stud length K, and material M

Example: For rivet-on D1-004-001-010 use column **A**
For TMT value calculated as 5.2 (.206), K = 55
For slotted head style, completed part number: D1-004-055-030
A complete example can be found on page 435.

H Head Styles - Tool Actuated

Slot Recess

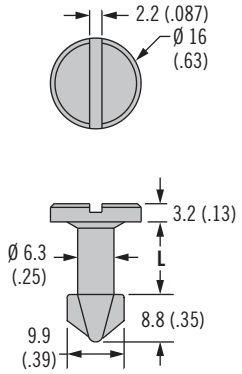

Hex Recess

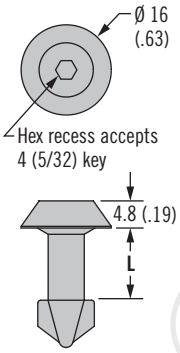

H Head Styles - Hand Actuated

Slotted Recess Knob

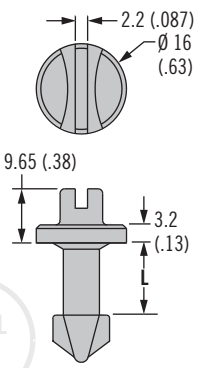

Wing

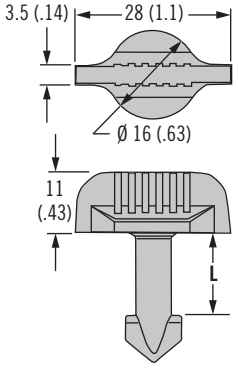

ACTUAL SIZE

Standard Stud Assembly

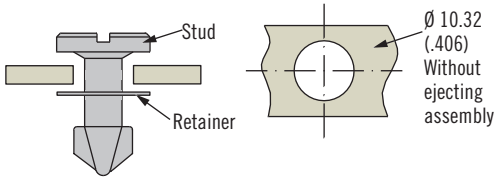

Self-Ejecting Stud Assembly

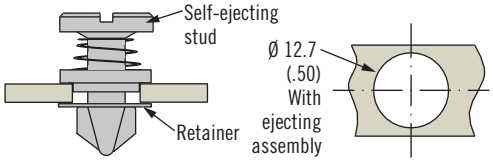

Stud Length Table

A		B		C		D		K	L
TMT Range For: D1-004-001-010		TMT Range For: D1-004-00(F)-010		TMT Range For: D1-004-92(F)-010		TMT Range For: D1-004-91(F)-010 D1-004-01(F)-010			
Min.	Max.	Min.	Max.	Min.	Max.	Min.	Max.		
2.54 (.100)	3.80 (.149)	~	~	4.32 (.170)	5.58 (.219)	4.13 (.163)	5.39 (.212)	**045**	11.4 (.45)
3.81 (.150)	5.07 (.199)	3.81 (.150)	5.07 (.199)	5.59 (.220)	6.85 (.269)	5.40 (.213)	6.66 (.262)	**050**	12.7 (.50)
5.08 (.200)	6.34 (.249)	5.08 (.200)	6.34 (.249)	6.86 (.270)	8.12 (.319)	6.67 (.263)	7.93 (.312)	**055**	14.0 (.55)
6.35 (.250)	7.61 (.299)	6.35 (.250)	7.61 (.299)	8.13 (.320)	9.39 (.369)	7.94 (.313)	9.20 (.362)	**060**	15.2 (.60)
7.62 (.300)	8.88 (.349)	7.62 (.300)	8.88 (.349)	9.40 (.370)	10.66 (.419)	9.21 (.363)	10.47 (.412)	**065**	16.5 (.65)
8.89 (.350)	10.15 (.399)	8.89 (.350)	10.15 (.399)	10.67 (.420)	11.93 (.469)	10.48 (.413)	11.74 (.462)	**070**	17.8 (.70)
10.16 (.400)	11.42 (.449)	10.16 (.400)	11.42 (.449)	11.94 (.470)	13.20 (.519)	11.75 (.463)	13.01 (.512)	**075**	19.1 (.75)
11.43 (.450)	12.69 (.499)	11.43 (.450)	12.69 (.499)	13.21 (.520)	14.47 (.569)	13.02 (.513)	14.28 (.562)	**080**	20.3 (.80)
12.70 (.500)	13.96 (.549)	12.70 (.500)	13.96 (.549)	14.48 (.570)	15.74 (.619)	14.29 (.563)	15.55 (.612)	**085**	21.6 (.85)
13.97 (.550)	15.23 (.599)	13.97 (.550)	15.23 (.599)	15.75 (.620)	17.01 (.669)	15.56 (.613)	16.82 (.662)	**090**	22.9 (.90)
15.24 (.600)	16.50 (.649)	15.24 (.600)	16.50 (.649)	17.02 (.670)	18.28 (.719)	16.83 (.663)	18.09 (.712)	**095**	24.1 (.95)
16.51 (.650)	17.77 (.699)	16.51 (.650)	17.77 (.699)	18.29 (.720)	19.55 (.769)	18.10 (.713)	19.36 (.762)	**100**	25.4 (1.0)

Part Number Selection

H Head style
004 Slot recess
125 Wing
166 Hex recess
444 Slot recess knob

D1 - H - K - 030 SE

K Length
Enter number from selection table above

SE Self-ejecting
SE Self-ejecting assembly
Omit for standard stud only

Dimensions in millimeters (inch) unless otherwise stated

DZUS® | southco®

D1 *DZUS*® Dart Quarter-Turn Fasteners

Receptacles, Acetal

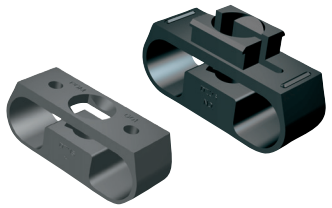

Rivet-On

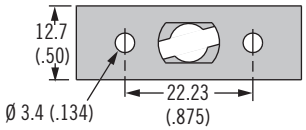

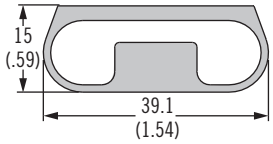

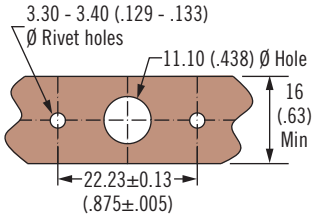

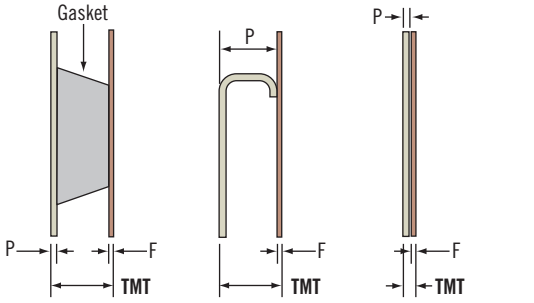

ACTUAL SIZE

Part Number	Stud Selection Column
D1-004-001-010	A

Material and Finish

Acetal, black

Notes

After selecting receptacle use stud selection letter **A** and follow instruction on page 474

Part Number

See table

Snap-In Back Load

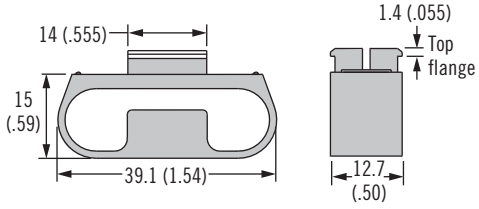

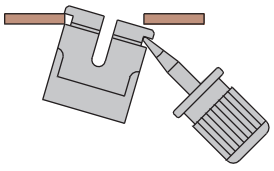

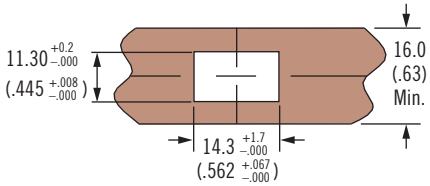

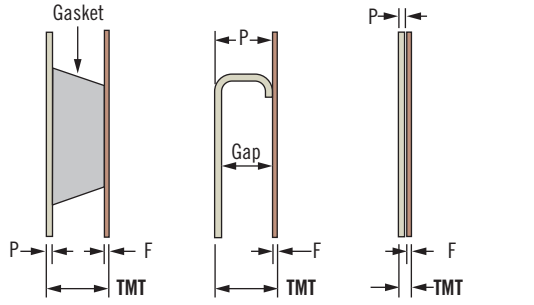

ACTUAL SIZE

F Frame Thickness		Part Number	Stud Selection Column
Min.	Max.		
.90 (.035)	1.27 (.050)	D1-004-002-010	B
1.63 (.064)	2.00 (.080)	D1-004-003-010	
2.30 (.090)	2.64 (.104)	D1-004-004-010	
3.00 (.119)	3.40 (.135)	D1-004-005-010	
3.65 (.144)	4.00 (.158)	D1-004-006-010	

Material and Finish

Acetal black

Notes

Utilize stud selection column indicated when choosing a stud length from the stud length table on page 474

Part Number

See table

D1 *DZUS*® Dart Quarter-Turn Fasteners

Receptacles, Acetal

Material and Finish

Acetal, black

Part Number

See table

Notes

Utilize stud selection column indicated when choosing a stud length from the stud length table on page 474

Mini Snap-In - Back Load

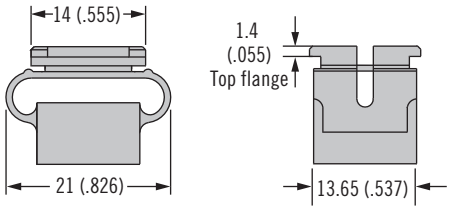

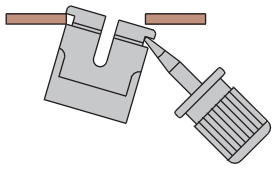

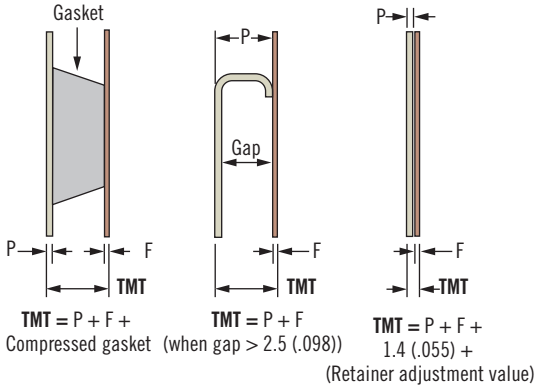

ACTUAL SIZE

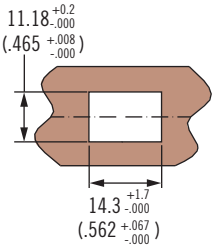

F Frame Thickness		Part Number	Stud Selection Column
Min.	Max.		
0.81 (.032)	1.27 (.050)	D1-004-012-010	D
1.29 (.051)	2.54 (.100)	D1-004-013-010	

Material and Finish

Acetal, black

Part Number

See table

Notes

Utilize stud selection column indicated when choosing a stud length from the stud length table on page 474

Mini Snap-In - Front Load

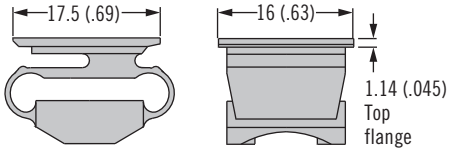

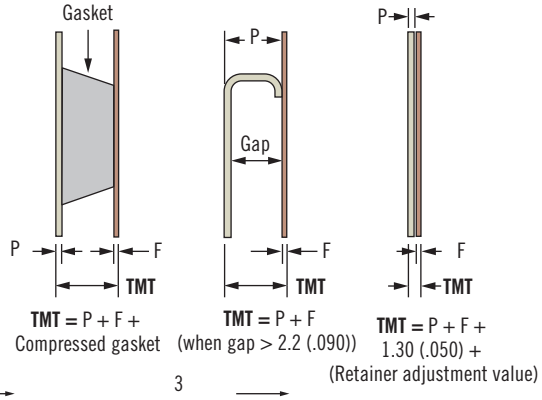

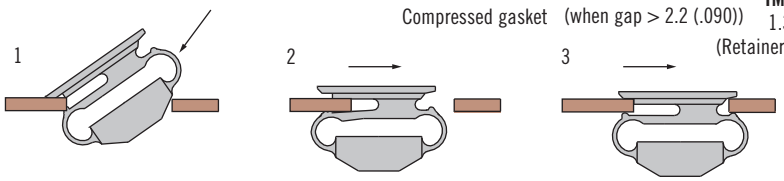

F Frame Thickness		Part Number	Stud Selection Column
Min.	Max.		
0.90 (.035)	1.25 (.049)	D1-004-911-010	D
1.30 (.051)	1.75 (.069)	D1-004-912-010	
1.80 (.071)	2.25 (.089)	D1-004-913-010	
2.30 (.091)	2.75 (.109)	D1-004-914-010	
2.80 (.111)	3.25 (.129)	D1-004-915-010	

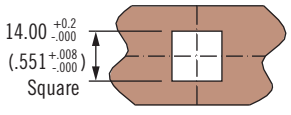

ACTUAL SIZE

Dimensions in millimeters (inch) unless otherwise stated

Clip-On

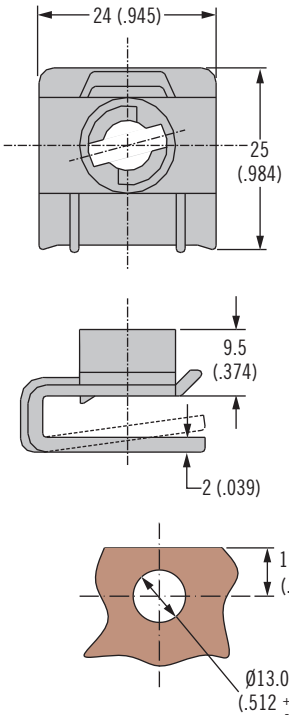

ACTUAL SIZE

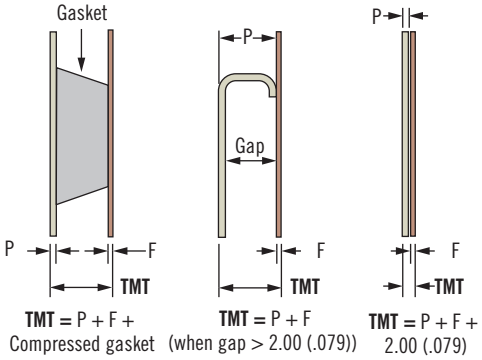

F Frame Thickness		Part Number	Stud Selection Column
Min.	Max.		
0.70 (.027)	2.30 (.090)	D1-004-921-010	C
2.30 (.090)	3.90 (.153)	D1-004-922-010	
3.9 (.153)	5.5 (.217)	D1-004-923-010	

Material and Finish
Acetal, black

Part Number
See table

Notes
Utilize stud selection column indicated when choosing a stud length from the stud length table on page 474

Retainer Split

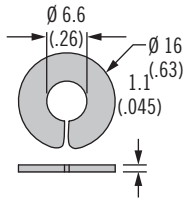

Self-Ejecting Springs

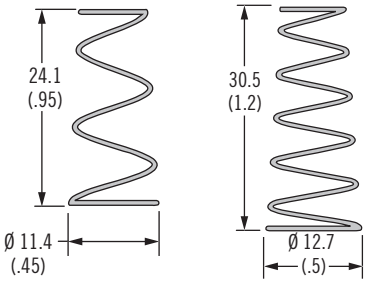

Self-Ejecting Cup

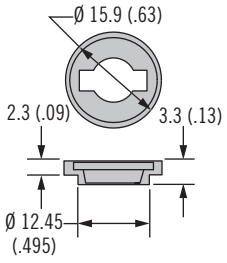

Material and Finish
See table

Part Number
See table

Notes
Adjustment value:
When using accessories the components increase TMT

Add the adjustment value to your outer panel thickness (P) when calculating TMT (see page 435 for example)

Type	K Range	Part Number	Material	Adjustment Value
Retainer split	All	D1-004-000-010	Acetal, black	Add 1.1 (.045)
Self-ejecting springs	045 to 070	D1-X1135-2S	Stainless steel	Add 2.3 (.090)
Self-ejecting springs	075 to 100	D1-X1137-2S	Stainless steel	
Self-ejecting cup	All	D1-X1129	Acetal, black	

D4 *DZUS*® Standard Line Quarter-Turn Fasteners

Stud selection · Size 3

Material and Finish

Studs:
Steel, zinc plated or stainless steel

To select correct fastener:

1. Select receptacle

Choose a receptacle from page 479

2. Select retainer and accessories

from page 480-481 and note any adjustment values

3. Specify stud length

Calculate the total material thickness (TMT) using the formula given for the receptacle selected. Find the range of TMT using the stud length selection table (right) using the column (A or B) given for the receptacle selected.

4. Complete the stud part number

by specifying the head style H, stud length K, and material M

Example: For rivet-on D4-S3-175 use column A
For TMT value calculated as 5.2 (.206), K = 35
For slotted head style in steel material, completed part number: D4-AJ3-35
A complete example can be found on page 435.

Notes

Stainless steel material may require a higher minimum order quantity. Contact Southco for details.

H Head Styles - Tool Actuated

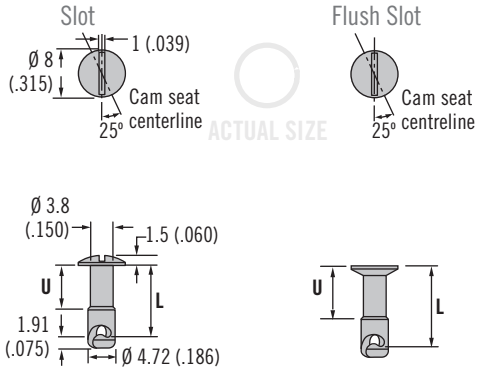

H Head Styles - Hand Actuated

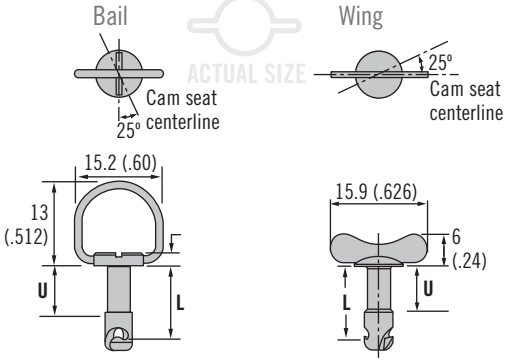

Flush

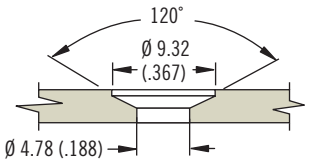

Standard

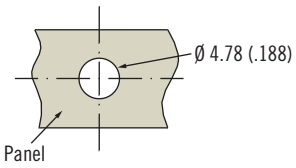

H Head style
AJ Slot
AJW Wing head
BJR Bail
FJ Flush slot

K Length
Enter number from selection table below

M Material
SS Stainless steel
Omit for steel, zinc plated

D4 - H 3 - K M

Stud Length Table

A				B				K	U	L
TMT Range For: Rivet-On Receptacle D4-S3-175		TMT Range For: Rivet-On Receptacle D4-S3-150		TMT Range For: Weld-On Receptacle D4-X735-205		TMT Range For: Weld-On Receptacle D4-X735-180				
Min.	Max.	Min.	Max.	Min.	Max.	Min.	Max.			
2.41 (.095)	3.02 (.119)	3.05 (.12)	3.66 (.144)	1.65 (.065)	2.26 (.089)	2.29 (.09)	2.9 (.114)	25	1.91 (.075)	6.35 (.250)
3.68 (.145)	4.29 (.169)	4.32 (.17)	4.93 (.194)	2.92 (.115)	3.53 (.139)	3.56 (.14)	4.17 (.164)	30	2.54 (.100)	7.62 (.300)
4.95 (.195)	5.56 (.219)	5.59 (.22)	6.2 (.244)	4.19 (.165)	4.8 (.189)	4.83 (.19)	5.44 (.214)	35	3.81 (.150)	8.89 (.350)
6.22 (.245)	6.83 (.269)	6.86 (.27)	7.47 (.294)	5.46 (.215)	6.07 (.239)	6.1 (.24)	6.71 (.264)	40	5.08 (.200)	10.16 (.400)
7.49 (.295)	8.1 (.319)	8.13 (.32)	8.74 (.344)	6.73 (.265)	7.34 (.289)	7.37 (.29)	7.98 (.314)	45	5.77 (.225)	11.43 (.450)
8.76 (.345)	9.37 (.369)	9.4 (.37)	10.01 (.394)	8.00 (.315)	8.61 (.339)	8.64 (.34)	9.25 (.364)	50	6.35 (.250)	12.70 (.500)
10.03 (.395)	10.64 (.419)	10.67 (.42)	11.28 (.444)	9.27 (.365)	9.88 (.389)	9.91 (.39)	10.52 (.414)	55	6.99 (.275)	13.97 (.550)
11.3 (.445)	11.91 (.469)	11.94 (.47)	12.55 (.494)	10.54 (.415)	11.15 (.439)	11.18 (.44)	11.79 (.464)	60	7.62 (.300)	15.24 (.600)
12.57 (.495)	13.18 (.519)	13.21 (.52)	13.82 (.544)	11.81 (.465)	12.42 (.489)	12.45 (.49)	13.06 (.514)	65	8.89 (.350)	16.51 (.650)
13.84 (.545)	14.45 (.569)	14.48 (.57)	15.09 (.594)	13.08 (.515)	13.69 (.539)	13.72 (.54)	14.33 (.564)	70		17.78 (.700)
15.11 (.595)	15.72 (.619)	15.75 (.62)	16.36 (.644)	14.35 (.565)	14.96 (.589)	14.99 (.59)	15.6 (.614)	75	9.5 (.375)	19.05 (.750)
16.38 (.645)	16.99 (.669)	17.02 (.67)	17.63 (.694)	15.62 (.615)	16.23 (.639)	16.26 (.64)	16.87 (.664)	80	10.16 (.400)	20.32 (.800)

Dimensions in millimeters (inch) unless otherwise stated

D4 *DZUS*® Standard Line Quarter-Turn Fasteners

Receptacles · Size 3

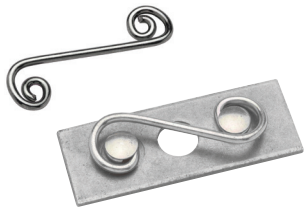

Rivet-On

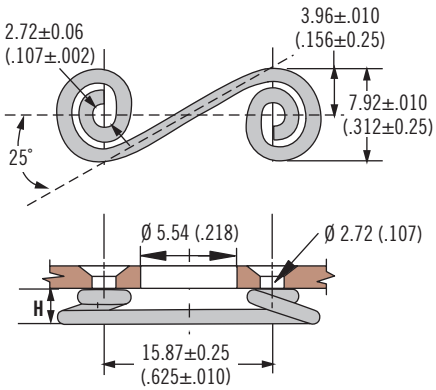

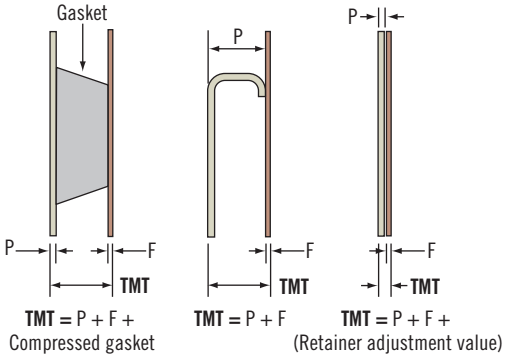

Part Number		H±0.25(.010)	Stud Selection Column
Steel	Stainless Steel		
D4-S3-150	D4-S3-150SS	3.81 (.150)	A
D4-S3-175	D4-S3-175SS	4.45 (.175)	

Material and Finish

Steel, zinc plated or stainless steel

Notes

After selecting receptacle use stud selection letter **A** and follow instruction on page 478

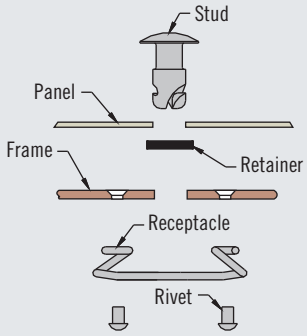

Part Number

See table

Weld-On

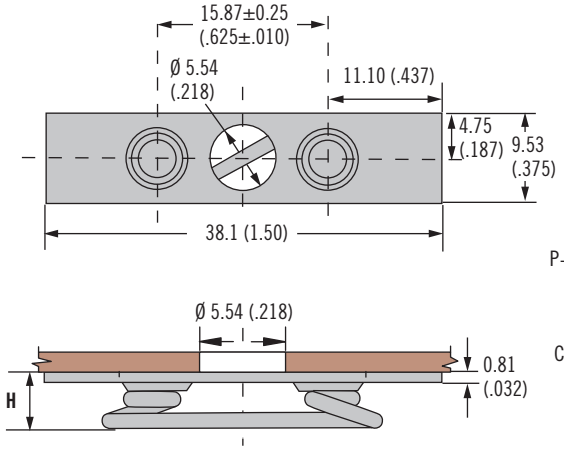

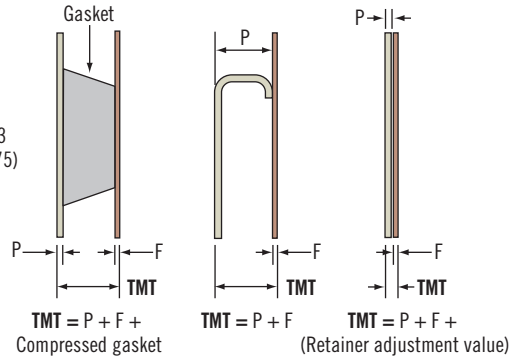

Part Number	H	Stud Selection Column
D4-X735-180	4.57 (.180)	B
D4-X735-205	5.21 (.205)	

Material and Finish

Steel, zinc plated

Notes

After selecting receptacle use stud selection letter **B** and follow instruction on page 478

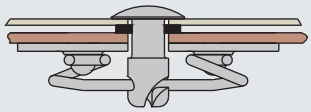

Part Number

See table

D4 *DZUS*® Standard Line Quarter-Turn Fasteners

Retainers · Size 3, 4, 5 and 6

Material and Finish

Retaining ring: Steel, zinc plated

Retaining spring: Stainless steel

Retainer GH: Aluminum, natural
Retainer GP, natural: HD Polythene
Retainer GP, black: Polypropylene

Installation Notes

1. Place the retainer on the mandrel as shown
2. Align ring or spring ends so that they will miss the stud cam
3. Place mandrel in end of stud cam
4. Place tool over mandrel
5. Push retainer until it is sealed in stud undercut

Notes

Tooling:
29 - TFRS hand tool: Spreads the inside diameter of retainers over stud shanks and then pushes them into stud undercuts.

29 - TB1A block: Nests stud heads during installation. (Any flat block may be used for BJR bail head studs).

Part Number

See table

Retainer GP

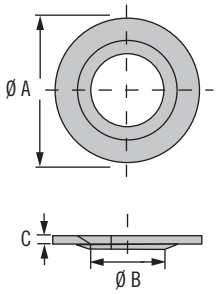

Retainer GH

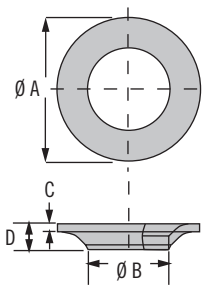

Retaining Ring

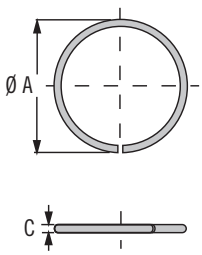

Install Retainer GP, Retaining Ring and SX

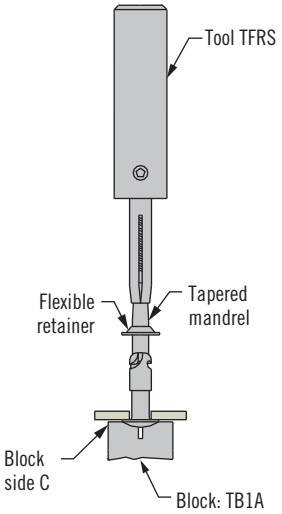

Retaining Spring

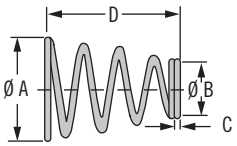

Install Retainer GH

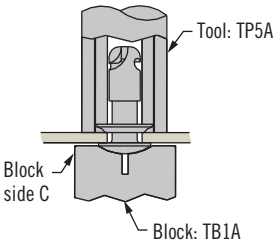

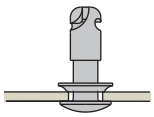

Standard Hole
Small diameter faces panel

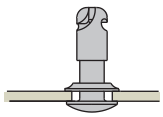

Oversized Hole
Large diameter faces panel

Size	Type	Part Number	Ø A	Ø B	C	D	Adjustment Value	Installation Tool Part Number
3	Retainer GP, natural	D4-GP3	7.9 (.311)	4.06 (.160)	0.5 (.020)	N/A	Add 0.51 (.020)	29-TFRS3 and 29-TB1A3
	Retainer GP, black	D4-GP3B						
	Retainer GH	D4-GH3		4.8 (.188)	0.38 (.015)	1.3 (.051)	Add 0.38 (.015)	29-TP5A3 and 29-TB1A3
	Retaining ring	D4-RR3	5.3 (.209)	N/A	0.56 (.022)	N/A	Add 0.56 (.022)	29-TFRS3 and 29-TB1A3
	Retaining spring	D4-SX520	7.9 (.311)	3.8 (.149)	0.46 (.018)	17.5 (.689)	Add 0.91 (.036)	
4	Retainer GP, natural	D4-GP4	11.1 (.437)	5.4 (.21)	0.7 (.028)	N/A	Add 0.7 (.028)	29-TFRS4 and 29-TB1A4
	Retainer GP, black	D4-GP4B						
	Retainer GH	D4-GH4		6.35 (.250)	0.64 (.025)	2.1 (.083)	Add 0.64 (.025)	29-TP5A4 and 29-TB1A4
	Retaining ring	D4-RR4	7.1 (.280)	N/A	0.71 (.028)	N/A	Add 0.74 (.029)	29-TFRS4 and 29-TB1A4
	Retaining spring	D4-SX523	11.1 (.437)	5.1 (.200)	0.64 (.025)	17.5 (.689)	Add 1.28 (.050)	
5	Retainer GP, natural	D4-GP5	14.3 (.562)	6.5 (.256)	0.83 (.033)	N/A	Add 0.86 (.034)	29-TFRS5 and 29-TB1A5
	Retainer GP, black	D4-GP5B						
	Retainer GH	D4-GH5		7.9 (.311)	0.88 (.035)	2.7 (.106)	Add 0.78 (.031)	29-TP5A5 and 29-TB1A5
	Retaining ring	D4-RR5	8.92 (.351)	N/A	0.91 (.036)	N/A	Add 0.91 (.035)	29-TFRS5 and 29-TB1A5
	Retaining spring	D4-SX510	14.3 (.562)	6.5 (.256)	0.82 (.032)	19 (.748)	Add 1.64 (.064)	
6	Retainer GH	D4-GH6	15.9 (.625)	9.5 (.374)	0.88 (.035)	2.9 (.114)	Add .88 (.035)	29-TP5A6 and 29-TB1A6
	Retaining ring	D4-RR6	10.78 (.424)	N/A	1.14 (.045)	N/A	Add 1.14 (.045)	29-TFRS6 and 29-TB1A6
	Retaining spring	D4-SX518	15.9 (.625)	8 (.315)	0.88 (.035)	19 (.748)	Add 1.76 (.070)	

Dimensions in millimeters (inch) unless otherwise stated

D4 *DZUS*® Standard Line Quarter-Turn Fasteners

Retainers · Size 3, 4, 5 and 6

Retainer GA

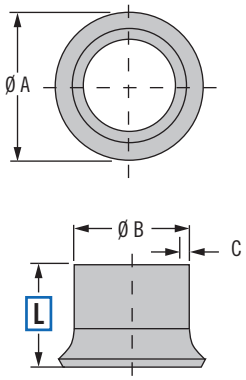

Installation Retainer GA

1.

2.

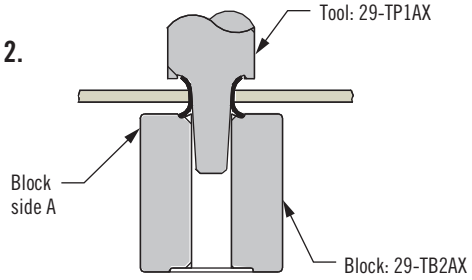

3.

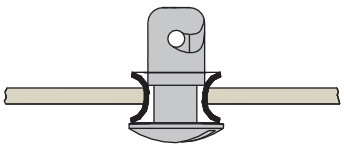

4.

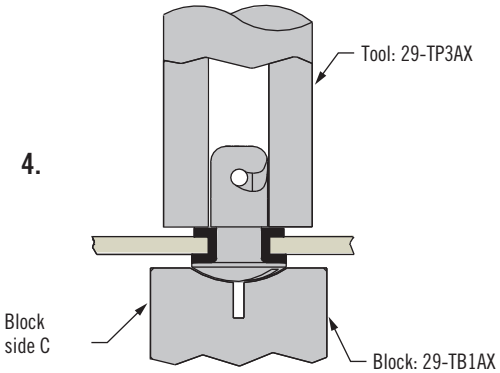

Size	Panel Thickness	L	Part Number	Ø A	Ø B	C	Adjustment Formula	Installation Tool Part Number
3	0.38 - 0.64 (.015 - .025)	4.45 (.175)	D4-GA3-175	Ø 7.9 (.311)	5.6 (.220)	0.38 (.015)	Add 0.76 (.030)	29-TP1A3, 29-TP3A3, 29-TB1A3 and 29-TB2A3 (all required)
	0.66 - 1.27 (.026 - .050)	5.08 (.200)	D4-GA3-200					
	1.29 - 2.38 (.051 - .094)	6.35 (.250)	D4-GA3-250					
4	0.38 - 0.64 (.015 - .025)	4.45 (.175)	D4-GA4-175	10.3 (.405)	7.9 (.311)	.64 (.025)	Add 1.28 (.050)	29-TP1A4, 29-TP3A4, 29-TB1A4 and 29-TB2A4 (all required)
	0.66 - 1.27 (.026 - .050)	5.08 (.200)	D4-GA4-200					
	1.29 - 2.38 (.051 - .094)	6.35 (.250)	D4-GA4-250					
5	0.38 - 0.64 (.015 - .025)	4.45 (.175)	D4-GA5-175	12.7 (.500)	9.5 (.374)	.71 (.028)	Add 1.42 (.056)	29-TP1A5, 29-TP3A5, 29-TB1A5 and 29-TB2A5 (all required)
	0.66 - 1.27 (.026 - .050)	5.08 (.200)	D4-GA5-200					
	1.29 - 2.38 (.051 - .094)	6.35 (.250)	D4-GA5-250					
6	0.38 - 0.64 (.015 - .025)	4.45 (.175)	D4-GA6-175	15.1 (.594)	11.1 (.437)	.71 (.028)	Add 1.42 (.056)	29-TP1A6, 29-TP3A6, 29-TB1A6 and 29-TB2A6 (all required)
	0.66 - 1.27 (.026 - .050)	5.08 (.200)	D4-GA6-200					
	1.29 - 2.38 (.051 - .094)	6.35 (.250)	D4-GA6-250					

Material and Finish

Retainer GA: Aluminum, natural

Installation Notes

1. Insert retainer in panel hole
2. Set retainer
3. Insert stud
4. Flatten retainer

Part Number

See table

D4 *DZUS*® Standard Line Quarter-Turn Fasteners

Stud selection · Size 4

Material and Finish

Studs:
Steel, zinc plated or stainless steel

To select correct fastener:

1. Select receptacle

Choose a receptacle from pages 484-485

2. Select retainer and accessories

from pages 480-481 and note any adjustment values

3. Specify stud length

Calculate the total material thickness (TMT) using the formula given for the receptacle selected. Find the range of TMT using the stud length selection table (right) using the column (A, B, C, or D) given for the receptacle selected.

4. Complete the stud part number

by specifying the head style H, stud length K, and material M

Example:
For rivet-on
D4-S4-225 use column A
For TMT value calculated as 5.2 (.206), K = 40
For slotted head style in steel material, completed part number:
D4-AJ4-40
A complete example can be found on page 435

H Head Styles - Tool Actuated

Slot

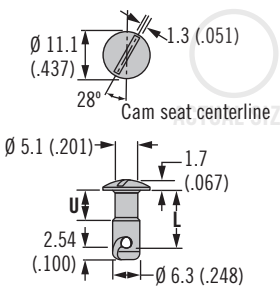

Hex Recess

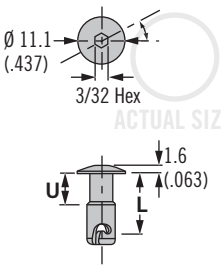

Phillips Recess

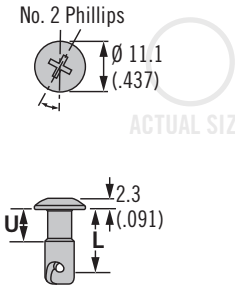

Flush Slot

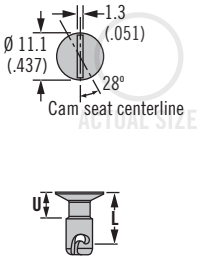

H Head Styles - Hand Actuated

Wing

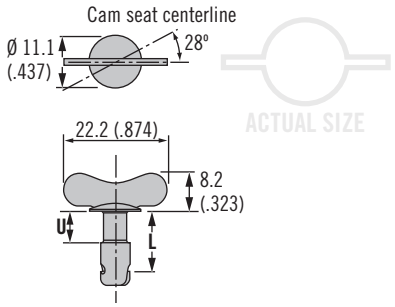

Bail

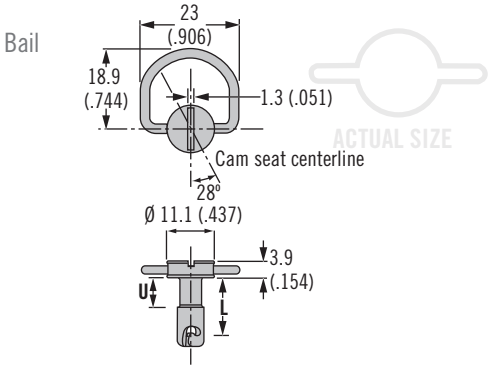

Stud Length Table

A				B				K	U	L
TMT Range For: Rivet-On Receptacle D4-S4-225		TMT Range For: Rivet-On Receptacle D4-S4-200		TMT Range For: Weld-On Receptacle D4-X485-300		TMT Range For: Weld-On Receptacle D4-X485-275				
Min.	Max.	Min.	Max.	Min.	Max.	Min.	Max.			
1.27 (.050)	1.88 (.074)	1.91 (.075)	2.51 (.099)	~	~	~	~	25	1.91 (.075)	6.35 (.250)
2.54 (.100)	3.15 (.124)	3.18 (.125)	3.78 (.149)	0.64 (.025)	1.24 (.049)	1.27 (.050)	1.88 (.074)	30	2.54 (.100)	7.62 (.300)
3.81 (.150)	4.42 (.174)	4.45 (.175)	5.05 (.199)	1.91 (.075)	2.51 (.099)	2.54 (.100)	3.15 (.124)	35	3.81 (.150)	8.89 (.350)
5.08 (.200)	5.69 (.224)	5.72 (.225)	6.32 (.249)	3.18 (.125)	3.78 (.149)	3.81 (.150)	4.42 (.174)	40	5.08 (.200)	10.16 (.400)
6.35 (.250)	6.96 (.274)	6.99 (.275)	7.59 (.299)	4.45 (.175)	5.05 (.199)	5.08 (.200)	5.69 (.224)	45	5.72 (.225)	11.43 (.450)
7.62 (.300)	8.23 (.324)	8.26 (.325)	8.86 (.349)	5.72 (.225)	6.32 (.249)	6.35 (.250)	6.96 (.274)	50	6.35 (.250)	12.70 (.500)
8.89 (.350)	9.50 (.374)	9.53 (.375)	10.13 (.399)	6.99 (.275)	7.59 (.299)	7.62 (.300)	8.23 (.324)	55	6.99 (.275)	13.97 (.550)
10.16 (.400)	10.77 (.424)	10.80 (.425)	11.40 (.449)	8.26 (.325)	8.86 (.349)	8.89 (.350)	9.50 (.374)	60	7.62 (.300)	15.24 (.600)
11.43 (.450)	12.04 (.474)	12.07 (.475)	12.67 (.499)	9.53 (.375)	10.13 (.399)	10.16 (.400)	10.77 (.424)	65	8.89 (.350)	16.51 (.650)
12.70 (.500)	13.31 (.524)	13.34 (.525)	13.94 (.549)	10.80 (.425)	11.40 (.449)	11.43 (.450)	12.04 (.474)	70		17.78 (.700)
13.97 (.550)	14.58 (.574)	14.61 (.575)	15.21 (.599)	12.07 (.475)	12.67 (.499)	12.70 (.500)	13.31 (.524)	75	10.16 (.400)	19.05 (.750)
15.24 (.600)	15.85 (.624)	15.88 (.625)	16.48 (.649)	13.34 (.525)	13.94 (.549)	13.97 (.550)	14.58 (.574)	80		20.32 (.800)
16.51 (.650)	17.12 (.674)	17.15 (.675)	17.75 (.699)	14.61 (.575)	15.21 (.599)	15.24 (.600)	15.85 (.624)	85	12.70 (.500)	21.59 (.850)
17.78 (.700)	18.39 (.724)	18.42 (.725)	19.02 (.749)	15.88 (.625)	16.48 (.649)	16.51 (.650)	17.12 (.674)	90		22.86 (.900)
19.05 (.750)	19.66 (.774)	19.69 (.775)	20.29 (.799)	17.15 (.675)	17.75 (.699)	17.78 (.700)	18.39 (.724)	95	15.24 (.600)	24.13 (.950)
20.32 (.800)	20.93 (.824)	20.96 (.825)	21.56 (.849)	18.42 (.725)	19.02 (.749)	19.05 (.750)	19.66 (.774)	100		25.40 (1.00)

Dimensions in millimeters (inch) unless otherwise stated

Flush

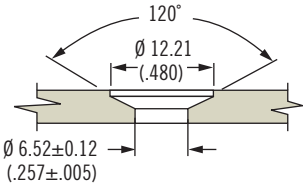

Standard

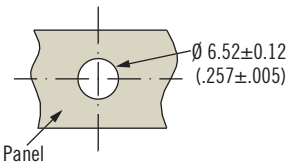

Part Number Selection

H Head style
- **AJ** Slot
- **ASHJ** Hex recess
- **APRJ** Phillips recess
- **FJ** Flush slot
- **AJW** Wing head
- **BJR** Ring head

K Length
Enter number from selection table on below

M Material
- **SS** Stainless steel

Omit for steel, zinc plated

D4 - H 4 - K M

Stud Length Table						
C				K	U	L
TMT Range For: Clip-On Receptacle D4-SL4-305		TMT Range For: Clip-On Receptacle D4-SL4-280				
Min.	Max.	Min.	Max.			
~	~	~	~	25	1.91 (.075)	6.35 (.250)
~	~	1.17 (.046)	1.78 (.070)	30	2.54 (.100)	7.62 (.300)
1.80 (.071)	2.41 (.095)	2.44 (.096)	3.05 (.120)	35	3.81 (.150)	8.89 (.350)
3.07 (.121)	3.68 (.145)	3.71 (.146)	4.32 (.170)	40	5.08 (.200)	10.16 (.400)
4.34 (.171)	4.95 (.195)	4.98 (.196)	5.59 (.220)	45	5.72 (.225)	11.43 (.450)
5.61 (.221)	6.22 (.245)	6.25 (.246)	6.86 (.270)	50	6.35 (.250)	12.70 (.500)
6.88 (.271)	7.49 (.295)	7.52 (.296)	8.13 (.320)	55	6.99 (.275)	13.97 (.550)
8.15 (.321)	8.76 (.345)	8.79 (.346)	9.40 (.370)	60	7.62 (.300)	15.24 (.600)
9.42 (.371)	10.03 (.395)	10.06 (.396)	10.67 (.420)	65	8.89 (.350)	16.51 (.650)
10.69 (.421)	11.30 (.445)	11.33 (.446)	11.94 (.470)	70		17.78 (.700)
11.96 (.471)	12.57 (.495)	12.60 (.496)	13.21 (.520)	75	10.16 (.400)	19.05 (.750)
13.23 (.521)	13.84 (.545)	13.87 (.546)	14.48 (.570)	80		20.32 (.800)
14.50 (.571)	15.11 (.595)	15.14 (.596)	15.75 (.620)	85	12.7 (.500)	21.59 (.850)
15.77 (.621)	16.38 (.645)	16.41 (.646)	17.02 (.670)	90	15.24 (.600)	22.86 (.900)
17.04 (.671)	17.65 (.695)	17.68 (.696)	18.29 (.720)	95		24.13 (.950)
18.31 (.721)	18.92 (.745)	18.95 (.746)	19.56 (.770)	100		25.40 (1.00)

Stud Length Table					
D			K	U	L
TMT Range For: Snap-In - Rear Mount Receptacle D4-SQC4-F					
Min.	Max.	D4-GP4B			
0.48 (.019)	1.09 (.043)	None	45	5.72 (.225)	11.43 (.450)
1.12 (.044)	1.73 (.068)	One	50	6.35 (.250)	12.70 (.500)
1.75 (.069)	2.36 (.093)	None	50		
2.39 (.094)	3.00 (.118)	One	55	6.99 (.275)	13.97 (.550)
3.02 (.119)	3.63 (.143)	None	55		
3.66 (.144)	4.27 (.168)	One	60	7.62 (.300)	15.24 (.600)
4.29 (.169)	4.90 (.193)	None	60		
4.93 (.194)	5.54 (.218)	One	65	8.89 (.350)	16.51 (.650)
5.56 (.219)	6.17 (.243)	None	65		
6.20 (.244)	6.81 (.268)	One	70		17.78 (.700)
6.83 (.269)	7.44 (.293)	None	70		
7.47 (.294)	8.08 (.318)	One	75	10.16 (.400)	19.05 (.750)
8.10 (.319)	8.71 (.343)	None	75		
8.74 (.344)	9.35 (.368)	One	80		20.32 (.800)
9.37 (.369)	9.98 (.393)	None	80		

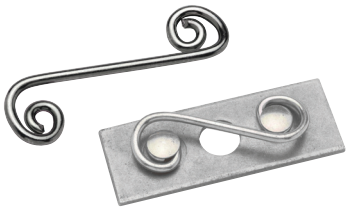

D4 *DZUS*® Standard Line Quarter-Turn Fasteners

Receptacles · Size 4

Material and Finish

Steel, zinc plated or stainless steel

Notes

After selecting receptacle use stud selection letter **A** and follow instruction on page 482

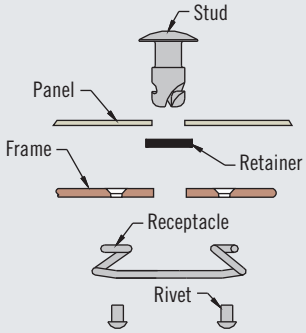

Part Number

See table

Utilize stud selection column indicated when choosing a stud length from the stud length table on page 482-483

Rivet-On

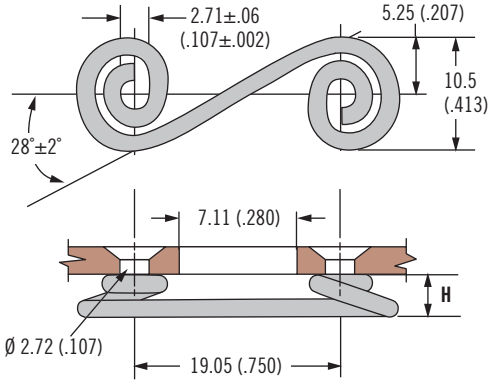

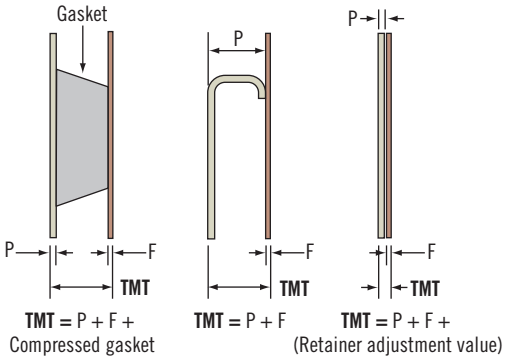

ACTUAL SIZE

Part Number		H	Stud Selection Column
Steel	Stainless Steel		
D4-S4-200	D4-S4-200SS	5.08 (.200)	A
D4-S4-225	D4-S4-225SS	5.72 (.225)	

Material and Finish

Steel, zinc plated or stainless steel

Notes

After selecting receptacle use stud selection letter **B** and follow instruction on page 482

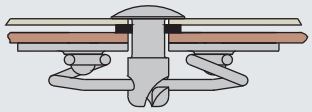

Part Number

See table

Utilize stud selection column indicated when choosing a stud length from the stud length table on page 482-483

Weld-On

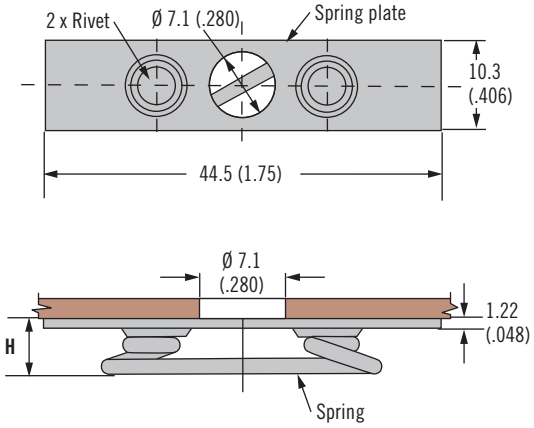

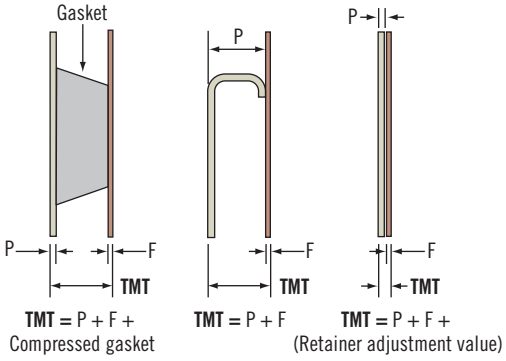

ACTUAL SIZE

Part Number		H	Stud Selection Column
Steel	Stainless Steel		
D4-X485-275	D4-X485-275SS	6.98 (.275)	B
D4-X485-300	D4-X485-300SS	7.62 (.300)	

Dimensions in millimeters (inch) unless otherwise stated

D4 *DZUS*® Standard Line Quarter-Turn Fasteners

Receptacles · Size 4

Clip-On

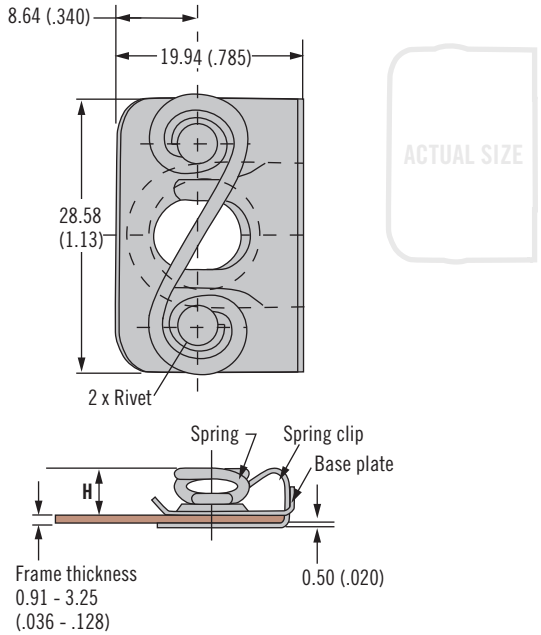

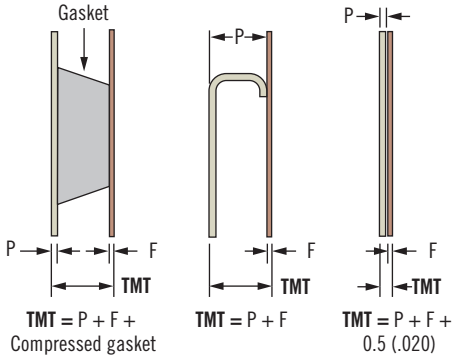

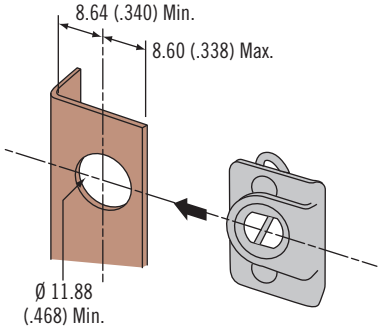

Part Number	H	Stud Selection Column
D4-SL4-280	7.11 (.280)	C
D4-SL4-305	7.75 (.305)	

Material and Finish

Steel, zinc plated

Notes

After selecting receptacle use stud selection letter **C** and follow instruction on page 482

Part Number

See table

Utilize stud selection column indicated when choosing a stud length from the stud length table on pages 482-483

Snap-In – Rear Mount

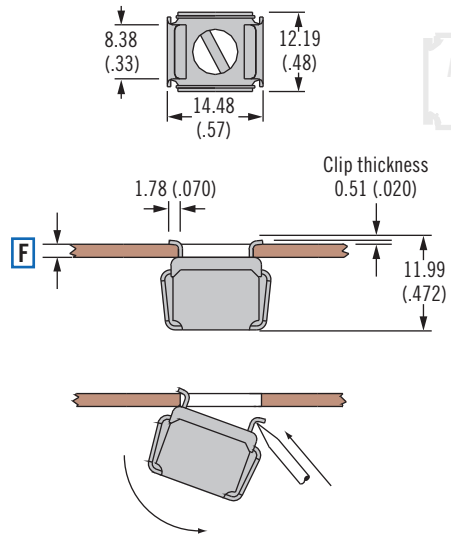

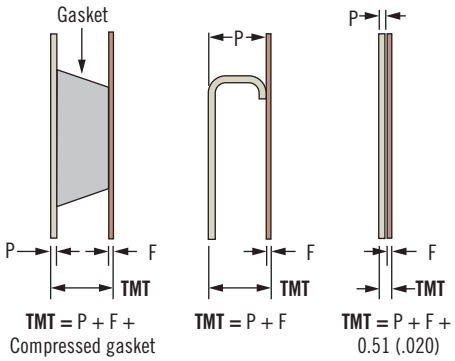

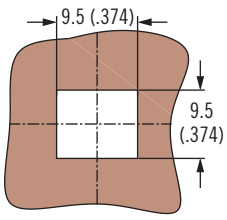

Part Number	F Frame Thickness	H	Stud Selection Column
D4-SQC4-16	0.78 - 1.42 (.031 - .056)	11.48 (.452)	D
D4-SQC4-20	1.47 - 1.98 (.058 - .078)	11.48 (.452)	
D4-SQC4-25	2 - 2.49 (.079 - .098)	11.48 (.452)	
D4-SQC4-30	2.59 - 3.18 (.102 - .125)	11.48 (.452)	

Material and Finish

Steel, zinc plated

Installation Notes

For stud retention use only retaining ring part number: D4-RR4

Notes

After selecting receptacle use stud selection letter **D** and follow instruction on page 482

Part Number

See table

Utilize stud selection column indicated when choosing a stud length from the stud length table on page 482-483

D4 *DZUS*® Standard Line Quarter-Turn Fasteners

Stud selection · Size 5

Material and Finish

Studs:
Steel, zinc plated or stainless steel

To select correct fastener:

1. Select receptacle

Choose a receptacle from pages 488-489

2. Select retainer and accessories

from pages 480-481 and note any adjustment values

3. Specify stud length

Calculate the total material thickness (TMT) using the formula given for the receptacle selected. Find the range of TMT using the stud length selection table (right) using the column (A, B or C) given for the receptacle selected.

4. Complete the stud part number

by specifying the head style H, stud length K, and material M

Example:
For rivet-on
D4-S5-225 use column A
For TMT value calculated as 5.21 (.205), K = 40
For slotted head style in steel material, completed part number: D4-AJ5-40
A complete example can be found on page 427.

Notes

Stainless steel material may require a higher minimum order quantity. Contact Southco for details.

H Head Styles - Tool Actuated

Slot

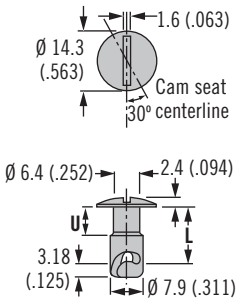

Hex Recess

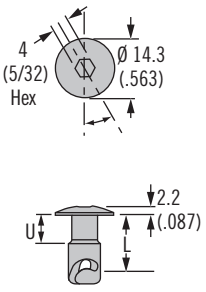

Phillips Recess

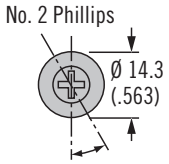

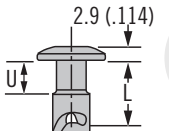

Flush slot

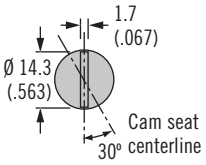

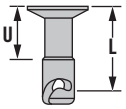

H Head Styles - Hand Actuated

Wing

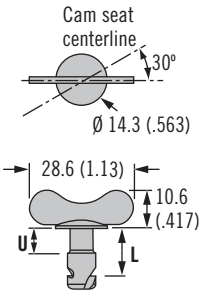

Bail

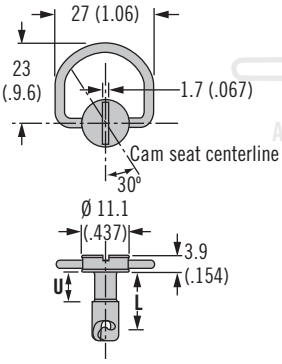

Stud Length Table											
A				B				U	L	K
TMT Range For: Rivet-On Receptacle D4-S5-225		TMT Range For: Rivet-On Receptacle D4-S5-200		TMT Range For: Weld-On Receptacle D4-X414-310		TMT Range For: Weld-On Receptacle D4-X414-285				
Min.	Max.	Min.	Max.	Min.	Max.	Min.	Max.			
2.67 (.105)	3.28 (.129)	3.3 (.13)	3.91 (.154)	~	~	~	~	3.18 (.125)	7.62 (.300)	30
3.94 (.155)	4.55 (.179)	4.57 (.18)	5.18 (.204)	1.65 (.065)	2.26 (.089)	2.29 (.09)	2.9 (.114)		8.89 (.350)	35
5.21 (.205)	5.82 (.229)	5.84 (.23)	6.45 (.254)	2.92 (.115)	3.53 (.139)	3.56 (.14)	4.17 (.164)	4.83 (.200)	10.16 (.400)	40
6.48 (.255)	7.09 (.279)	7.11 (.28)	7.72 (.304)	4.19 (.165)	4.8 (.189)	4.83 (.19)	5.44 (.214)		11.43 (.450)	45
7.75 (.305)	8.36 (.329)	8.38 (.33)	8.99 (.354)	5.46 (.215)	6.07 (.239)	6.1 (.24)	6.71 (.264)	6.35 (.250)	12.70 (.500)	50
9.02 (.355)	9.63 (.379)	9.65 (.38)	10.26 (.404)	6.73 (.265)	7.34 (.289)	7.37 (.29)	7.98 (.314)	6.99 (.275)	13.97 (.550)	55
10.29 (.405)	10.9 (.429)	10.92 (.43)	11.53 (.454)	8.00 (.315)	8.61 (.339)	8.64 (.34)	9.25 (.364)	7.62 (.300)	15.24 (.600)	60
11.56 (.455)	12.17 (.479)	12.19 (.48)	12.8 (.504)	9.27 (.365)	9.88 (.389)	9.91 (.39)	10.52 (.414)	8.89 (.350)	16.51 (.650)	65
12.83 (.505)	13.44 (.529)	13.46 (.53)	14.07 (.554)	10.54 (.415)	11.15 (.439)	11.18 (.44)	11.79 (.464)	10.16 (.400)	17.78 (.700)	70
14.1 (.555)	14.71 (.579)	14.73 (.58)	15.34 (.604)	11.81 (.465)	12.42 (.489)	12.45 (.49)	13.06 (.514)		19.05 (.750)	75
15.37 (.605)	15.98 (.629)	16.00 (.63)	16.61 (.654)	13.08 (.515)	13.69 (.539)	13.72 (.54)	14.33 (.564)	12.7 (.500)	20.32 (.800)	80
16.64 (.655)	17.25 (.679)	17.27 (.68)	17.88 (.704)	14.35 (.565)	14.96 (.589)	14.99 (.59)	15.6 (.614)		21.59 (.850)	85
17.91 (.705)	18.52 (.729)	18.54 (.73)	19.15 (.754)	15.62 (.615)	16.23 (.639)	16.26 (.64)	16.87 (.664)	15.24 (.600)	22.86 (.900)	90
19.18 (.755)	19.79 (.779)	19.81 (.78)	20.42 (.804)	16.89 (.665)	17.5 (.689)	17.53 (.69)	18.14 (.714)		24.13 (.950)	95
20.45 (.805)	21.06 (.829)	21.08 (.83)	21.69 (.854)	18.16 (.715)	18.77 (.739)	18.8 (.74)	19.41 (.764)	17.78 (.70)	25.40 (1.00)	100

Dimensions in millimeters (inch) unless otherwise stated

Flush

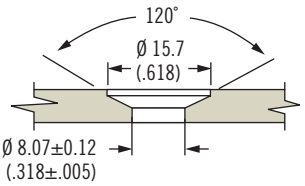

Standard

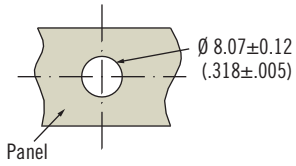

Part Number Selection

H Head style
- **AJ** Slot
- **ASHJ** Hex recess
- **APRJ** Phillips recess
- **FJ** Flush slot
- **AJW** Wing head
- **BJR** Bail head

K Length
Enter number from selection table below

M Material
- **SS** Stainless steel
- Omit for steel, zinc plated

D4 - H 5 - K M

Stud Length Table						
C				U	L	K
TMT Range For: Clip-On Receptacle D4-SL5-305		TMT Range For: Clip-On Receptacle D5-SL5-280				
Min.	Max.	Min.	Max.			
~	~	1.17 (.046)	1.78 (.07)	3.18 (.125)	7.62 (.300)	**30**
1.8 (.071)	2.41 (.095)	2.44 (.096)	3.05 (.12)		8.89 (.350)	**35**
3.07 (.121)	3.68 (.145)	3.71 (.146)	4.32 (.17)	4.83 (.200)	10.16 (.400)	**40**
4.34 (.171)	4.95 (.195)	4.98 (.196)	5.59 (.22)		11.43 (.450)	**45**
5.61 (.221)	6.22 (.245)	6.25 (.246)	6.86 (.27)	6.35 (.250)	12.70 (.500)	**50**
6.88 (.271)	7.49 (.295)	7.52 (.296)	8.13 (.32)	6.99 (.275)	13.97 (.550)	**55**
8.15 (.321)	8.76 (.345)	8.79 (.346)	9.4 (.37)	7.62 (.300)	15.24 (.600)	**60**
9.42 (.371)	10.03 (.395)	10.06 (.396)	10.67 (.42)	8.89 (.350)	16.51 (.650)	**65**
10.69 (.421)	11.3 (.445)	11.33 (.446)	11.94 (.47)	10.16 (.400)	17.78 (.700)	**70**
11.96 (.471)	12.57 (.495)	12.6 (.496)	13.21 (.52)		19.05 (.750)	**75**
13.23 (.521)	13.84 (.545)	13.87 (.546)	14.48 (.57)	12.7 (.500)	20.32 (.800)	**80**
14.5 (.571)	15.11 (.595)	15.14 (.596)	15.75 (.62)		21.59 (.850)	**85**
15.77 (.621)	16.38 (.645)	16.41 (.646)	17.02 (.67)	15.24 (.600)	22.86 (.900)	**90**
17.04 (.671)	17.65 (.695)	17.68 (.696)	18.29 (.72)		24.13 (.950)	**95**
18.31 (.721)	18.92 (.745)	18.95 (.746)	19.56 (.77)	17.78 (.70)	25.40 (1.00)	**100**

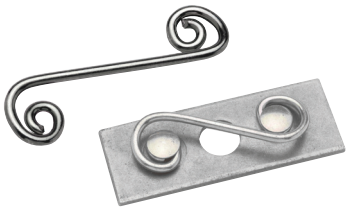

D4 *DZUS*® Standard Line Quarter-Turn Fasteners

Receptacles · Size 5

Material and Finish

Steel, zinc plated or stainless steel

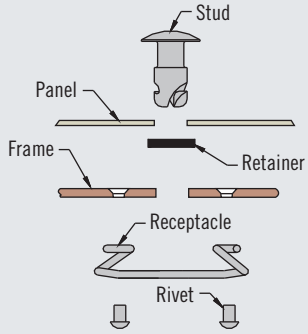

Part Number

See table

Notes

Utilize stud selection column indicated when choosing a stud length from the stud length table on pages 486-487

Rivet-On

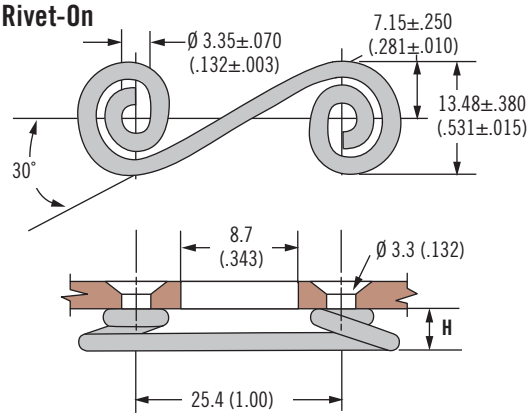

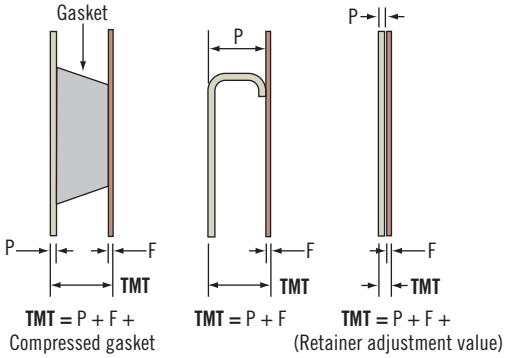

Part Number		H	Stud Selection Column
Steel	Stainless Steel		
D4-S5-200	D4-S5-200SS	5.08 (.200)	A
D4-S5-225	D4-S5-225SS	5.72 (.225)	

Material and Finish

Steel, zinc plated or stainless steel

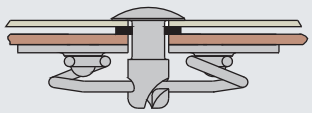

Part Number

See table

Notes

Utilize stud selection column indicated when choosing a stud length from the stud length table on pages 486-487

Weld-On

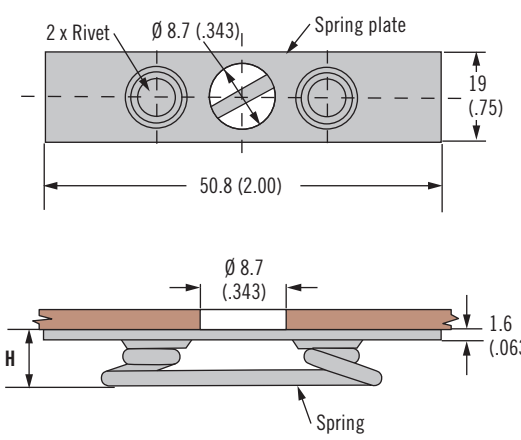

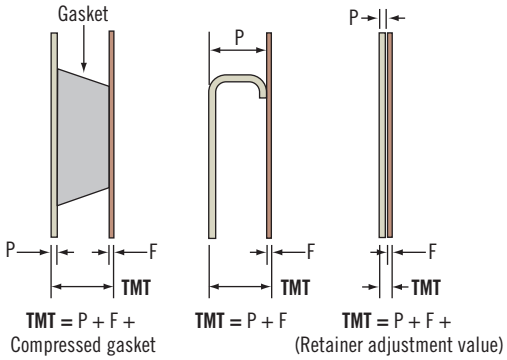

Part Number		H	Stud Selection Column
Steel	Stainless Steel		
D4-X414-285	D4-X414-285SS	7.2 (.285)	B
D4-X414-310	D4-X414-310SS	7.9 (.310)	

Dimensions in millimeters (inch) unless otherwise stated

D4 *DZUS*® Standard Line Quarter-Turn Fasteners

Receptacles · Size 5

Clip-On

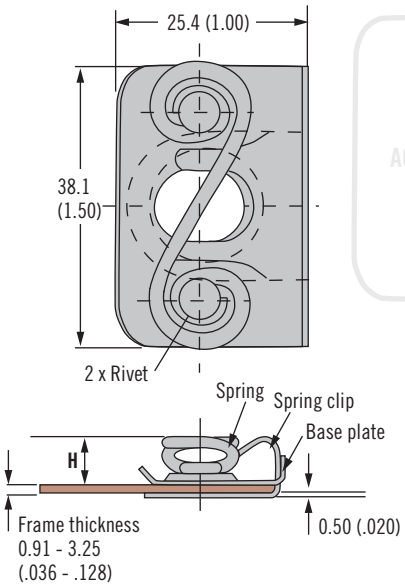

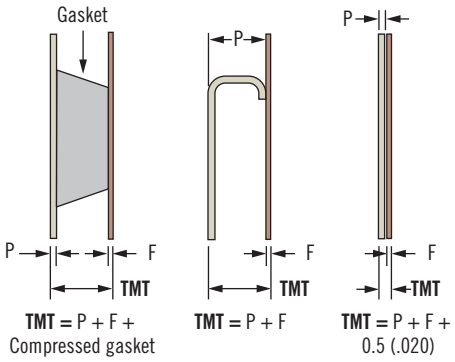

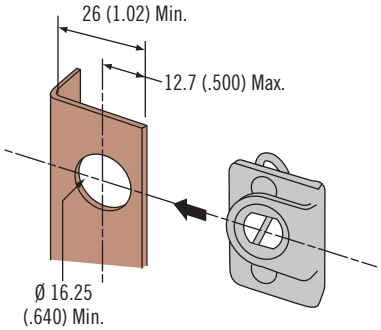

Note:
Panel misalignment can be tolerated by increasing the support hole to 17.86 (.703) and decreasing the hole center to edge distance to 11.43 (.450)

Part Number	H	Stud Selection Column
D4-SL5-280	7.11 (.280)	C
D4-SL5-305	7.75 (.305)	

Material and Finish

Steel, zinc plated

Part Number

See table

Notes

Utilize stud selection column indicated when choosing a stud length from the stud length table on pages 486-487

D4 *DZUS*® Standard Line Quarter-Turn Fasteners

Stud selection · Size 6

Material and Finish

Studs:
Steel, zinc plated or stainless steel

To select correct fastener:

1. Select receptacle

Choose a receptacle from page 491

2. Select retainer and accessories

from pages 480-481 and note any adjustment values

3. Specify stud length

Calculate the total material thickness (TMT) using the formula given for the receptacle selected. Find the range of TMT using the stud length selection table (right) using the column (A or B) given for the receptacle selected.

4. Complete the stud part number

by specifying the head style H, stud length K, and material M

Example:
For rivet-on
D4-S6-300 use column A
For TMT value calculated as 5.2 (.206), K = 45
For slotted head style in steel material, completed part number: D4-AJ6-45
A complete example can be found on page 435.

Notes

Stainless steel material may require a higher minimum order quantity. Contact Southco for details.

H Head Styles - Tool Actuated

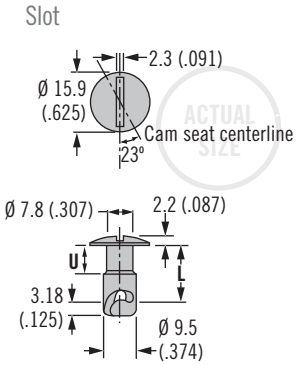

H Head Styles - Hand Actuated

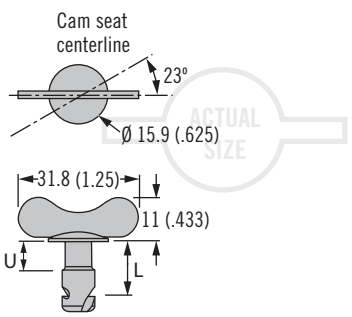

Flush

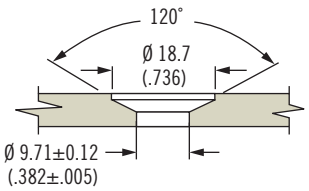

Standard

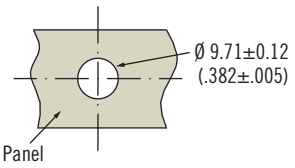

H Head style
- **AJ** Slot recess
- **AJW** Wing head
- **FJ** Flush slot

K Length
Enter number from selection table below

M Material
- **SS** Stainless steel
- Omit for steel, zinc plated

D4 - H 6 - K M

Stud Length Table

A				B				U	L	K
TMT Range For: Rivet-On Receptacle D4-S6-300		TMT Range For: Rivet-On Receptacle D4-S6-275		TMT Range For: Weld-On Receptacle D4-X441-335		TMT Range For: Weld-On Receptacle D4-X441-310				
Min.	Max.	Min.	Max.	Min.	Max.	Min.	Max.			
2.29 (.090)	2.90 (.114)	2.92 (.115)	3.53 (.139)	1.40 (.055)	2.01 (.079)	2.03 (.080)	2.64 (.104)	4.45 (.175)	8.89 (.350)	35
3.56 (.140)	4.17 (.164)	4.19 (.165)	4.80 (.189)	2.67 (.105)	3.28 (.129)	3.30 (.130)	3.91 (.154)	5.08 (.200)	10.16 (.400)	40
4.83 (.190)	5.44 (.214)	5.46 (.215)	6.07 (.239)	3.94 (.155)	4.55 (.179)	4.57 (.180)	5.18 (.204)	5.72 (.225)	11.43 (.450)	45
6.10 (.240)	6.71 (.264)	6.73 (.265)	7.34 (.289)	5.21 (.205)	5.82 (.229)	5.84 (.230)	6.45 (.254)	6.35 (.250)	12.70 (.500)	50
7.37 (.290)	7.98 (.314)	8.00 (.315)	8.61 (.339)	6.48 (.255)	7.09 (.279)	7.11 (.280)	7.72 (.304)	6.99 (.275)	13.97 (.550)	55
8.64 (.340)	9.25 (.364)	9.27 (.365)	9.88 (.389)	7.75 (.305)	8.36 (.329)	8.38 (.330)	8.99 (.354)	7.62 (.300)	15.24 (.600)	60
9.91 (.390)	10.52 (.414)	10.54 (.415)	11.15 (.439)	9.02 (.355)	9.63 (.379)	9.65 (.380)	10.26 (.404)	8.89 (.350)	16.51 (.650)	65
11.18 (.440)	11.79 (.464)	11.81 (.465)	12.42 (.489)	10.29 (.405)	10.90 (.429)	10.92 (.430)	11.53 (.454)		17.78 (.700)	70
12.45 (.490)	13.06 (.514)	13.08 (.515)	13.69 (.539)	11.56 (.455)	12.17 (.479)	12.19 (.480)	12.80 (.504)	10.16 (.400)	19.05 (.750)	75
13.72 (.540)	14.33 (.564)	14.35 (.565)	14.96 (.589)	12.83 (.505)	13.44 (.529)	13.46 (.530)	14.07 (.554)	11.43 (.450)	20.32 (.800)	80
14.99 (.590)	15.60 (.614)	15.62 (.615)	16.23 (.639)	14.10 (.555)	14.71 (.579)	14.73 (.580)	15.34 (.604)	12.7 (.500)	21.59 (.850)	85
16.26 (.640)	16.87 (.664)	16.89 (.665)	17.50 (.689)	15.37 (.605)	15.98 (.629)	16.00 (.630)	16.61 (.654)	13.97 (.550)	22.86 (.900)	90
17.53 (.690)	18.14 (.714)	18.16 (.715)	18.77 (.739)	16.64 (.655)	17.25 (.679)	17.27 (.680)	17.88 (.704)	15.24 (.600)	24.13 (.950)	95
18.80 (.740)	19.41 (.764)	19.43 (.765)	20.04 (.789)	17.91 (.705)	18.52 (.729)	18.54 (.730)	19.15 (.754)	16.51 (.650)	25.40 (1.00)	100

Dimensions in millimeters (inch) unless otherwise stated

D4 *DZUS*® Standard Line Quarter-Turn Fasteners

Receptacles · Size 6

Rivet-On

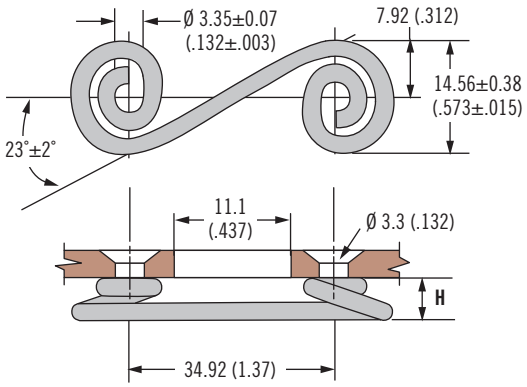

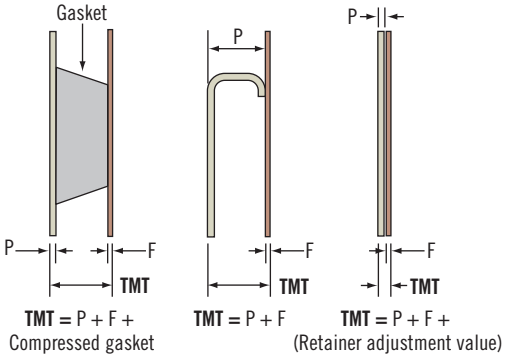

Part Number		H	Stud Selection Column
Steel	Stainless Steel		
D4-S6-275	D4-S6-275SS	6.99 (.275)	A
D4-S6-300	D4-S6-300SS	7.62 (.300)	

Material and Finish

Steel, zinc plated or stainless steel

Notes

After selecting receptacle use stud selection letter **A** and follow instruction on page 490

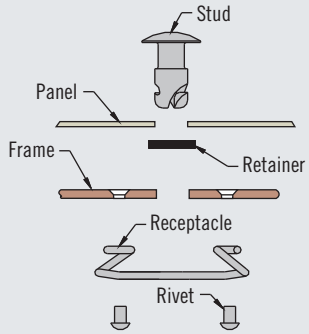

Part Number

See table

Weld-On

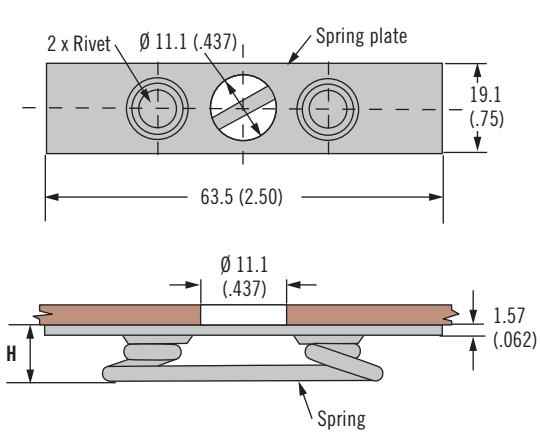

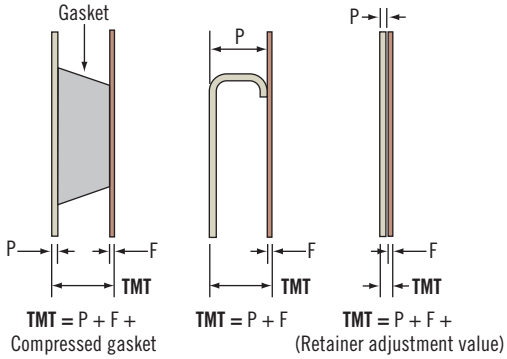

Part Number	H	Stud Selection Column
D4-X441-310	7.87 (.310)	B
D4-X441-335	8.51 (.335)	

Material and Finish

Steel, zinc plated

Notes

After selecting receptacle use stud selection letter **B** and follow instruction on page 490

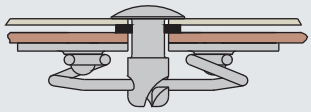

Part Number

See table

D5 *DZUS*® Panel Line Quarter-turn Fasteners

Studs

DZUS® Panel line features captive, flare-in stud assemblies and continuous receptacle strip.

- **Captive to outer panel**
- **Predictable clamping force**
- **High vibration resistance**
- **Visual latched indication**

Material and Finish

Steel, zinc plated

Performance Details

Rated tensile and shear:
890 N (200 lbs.) when used with *DZUS*® receptacles

1. Select receptacle type
2. D5-PR35S3 (angle) or D5-PR35-1S3 (flat) receptacle types. Determine outer panel thickness and use column A. Select from column C for assemblies.

OR

D5-PB35 (Single hole wire form) receptacle type. Determine outer panel thickness and use column A, then calculate total material thickness (TMT) required as indicated in column B Select from column C for assemblies.

Stud assembly

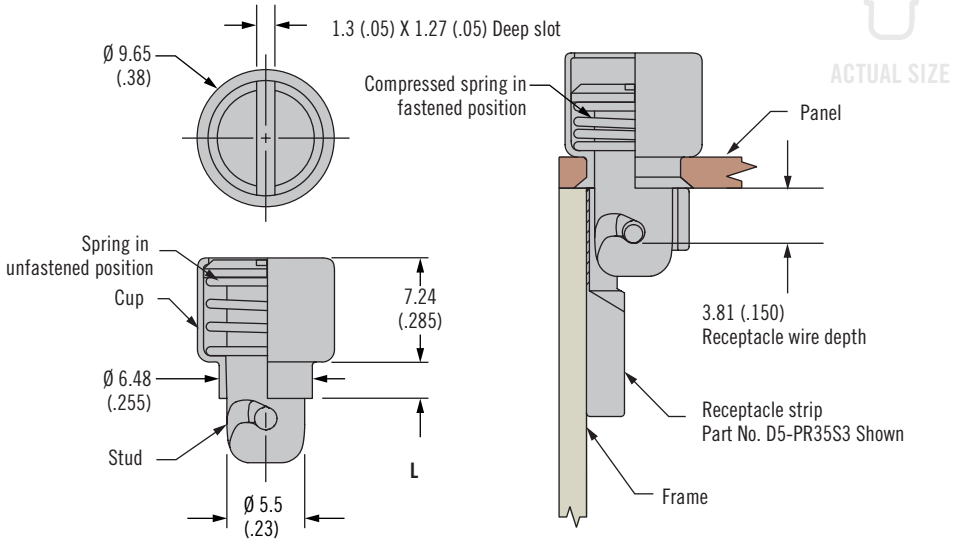

Panel Preparation

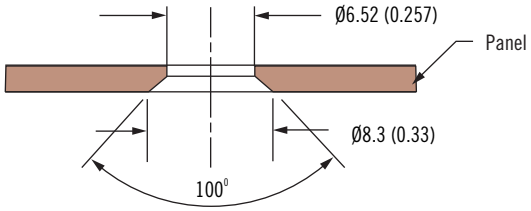

Panel line stud assembly options

A			B		C
Outer panel dimensions		Cup flange length L	TMT Range for: D5-PB35		Stud assembly
A Min.	A Max.		Min.	Max.	
1.27 (.050)	1.50 (.059)	1.78 (.070)	3.81 (.150)	4.04 (.159)	D5-PFSC35-37A-190
1.52 (.060)	1.75 (.069)	2.03 (.080)	4.06 (.160)	4.29 (.169)	D5-PFSC35-38A-190
1.77 (.070)	2.01 (.079)	2.29 (.090)	4.32 (.170)	4.55 (.179)	D5-PFSC35-39A-190
2.03 (.080)	2.26 (.089)	2.54 (.100)	4.57 (.180)	4.80 (.189)	D5-PFSC35-40A-190
2.29 (.090)	2.51 (.099)	2.80 (.110)	4.83 (.190)	5.05 (.199)	D5-PFSC35-41A-190
2.54 (.100)	2.77 (.109)	3.05 (.120)	5.08 (.200)	5.31 (.209)	D5-PFSC35-42A-190
2.79 (.110)	3.02 (.119)	3.30 (.130)	5.33 (.210)	5.56 (.219)	D5-PFSC35-43A-190
3.05 (.120)	3.28 (.129)	3.56 (.140)	5.59 (.220)	5.82 (.229)	D5-PFSC35-44A-190

Installation Tools

Panel installation

Flare tool	Support block
29-TP1PT35A	29-TB1PT35A

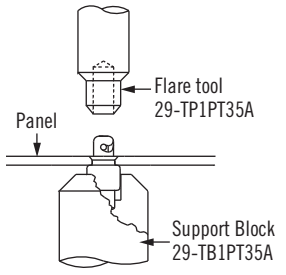

Dimensions in millimeters (inch) unless otherwise stated

DZUS® | southco®

D5 *DZUS*® Panel Line Quarter-turn Fasteners

Receptacles

Angle

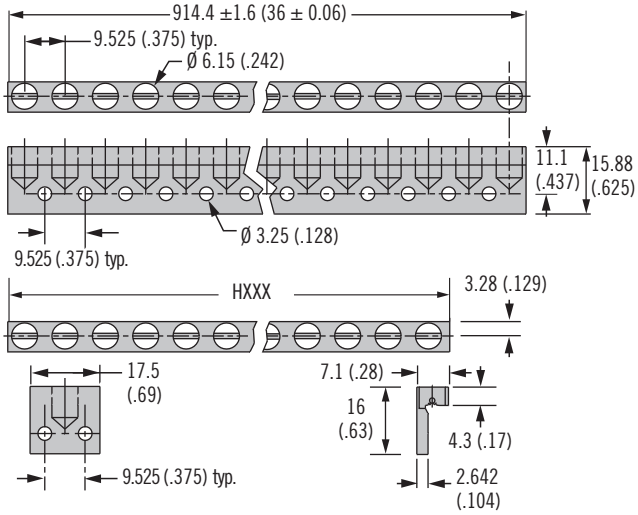

Angle Receptacle		Stud selection column
Standard length D5-PR35S3		A
Custom length D5-PR35HXXX	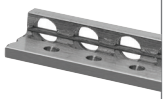	
Single hole D5-PRB35		

Flat

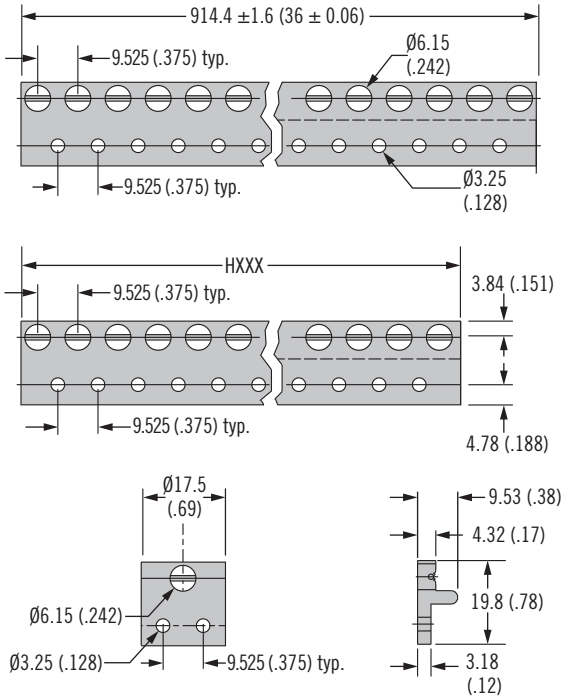

Flat Receptacle		Stud selection column
Standard length D5-PR35-1S3		A
Custom length D5-PR35-1HXXX		
Single hole D5-PRC35		

Single hole wire form

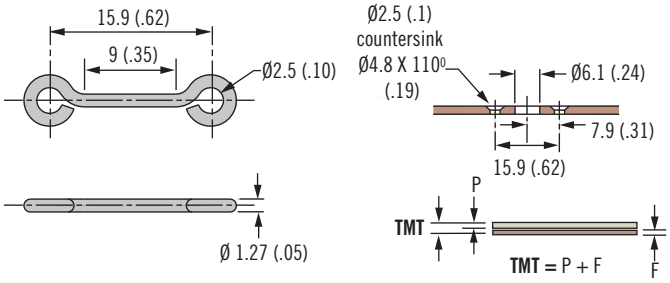

Single hole wire form receptacle		Stud selection column
D5-PB35		B

Material and Finish

Right angle, flat aluminum and stainless steel
Single hole wire form steel zinc plated

Select Receptacle Profile

1. Right angle or flat
2. Single hole, standard length (96 holes) or custom length
3. If custom length HXXX (2 holes Min. - 319 holes Max.) determine number of useable receptacle holes.
   Total length = No of useable holes multiplied by 9.525 (.375) minus 1.525 (.06)

Example:
319 useable holes
= 319 x 9.525 (.375)
– 1.525 (.06) = 3037 (119.56)
Replace HXXX with H319

* Longer standard lengths available. Contact Southco for details.

D7 *DZUS*® Pilot Quarter-Turn Fasteners

Studs

Material and Finish

Studs: Steel, zinc plated plus chromate
Washer: Neoprene, black

Notes

Select stud and washer part number from table based on your panel thickness P

Part Number

See table

Order stud and washer separately

Studs

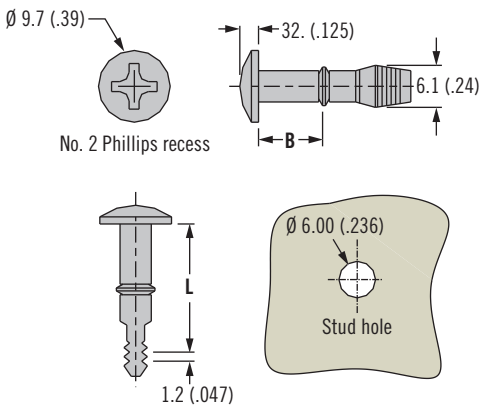

Washer

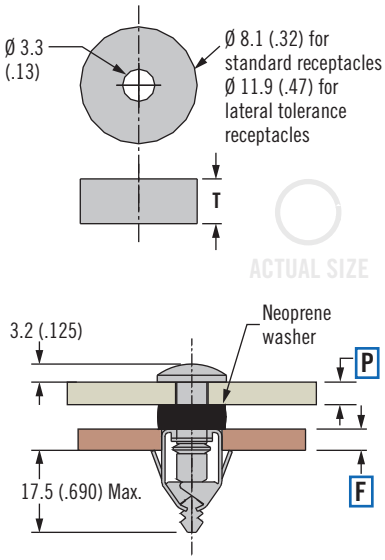

P Panel Thickness	Stud L	Stud B	T Washer Thickness	Part Number			
				Stud		Neoprene Washer	
				Black chromate	Bright chromate	For standard receptacle	For lateral tolerance receptacle
1.3 (.05) to 1.7 (.07)	16 (.63)	7.1 (.28)	4.1 (.16)	D7-265-716-191	D7-265-716-190	D7-275-040-400	D7-275-140-400
1.8 (.07) to 2.2 (.09)	16 (.63)	7.1 (.28)	3.6 (.14)	D7-265-716-191	D7-265-716-190	D7-275-035-400	D7-275-135-400
2.3 (.09) to 2.7 (.11)	17.8 (.70)	8.9 (.35)	5.1 (.20)	D7-265-718-191	D7-265-718-190	D7-275-050-400	D7-275-150-400
2.8 (.11) to 3.2 (.12)	17.8 (.70)	8.9 (.35)	4.6 (.18)	D7-265-718-191	D7-265-718-190	D7-275-045-400	D7-275-145-400
3.3 (.13) to 3.7 (.15)	17.8 (.70)	8.9 (.35)	4.1 (.16)	D7-265-718-191	D7-265-718-190	D7-275-040-400	D7-275-140-400
3.8 (.15) to 4.2 (.17)	17.8 (.70)	8.9 (.35)	3.6 (.14)	D7-265-718-191	D7-265-718-190	D7-275-035-400	D7-275-135-400
4.3 (.17) to 4.8 (.19)	20.0 (.79)	10.9 (.43)	5.1 (.20)	D7-265-720-191	D7-265-720-190	D7-275-050-400	D7-275-150-400

Self-Ejecting Studs

Material and Finish

Steel, zinc plated and thermoplastic black

Notes

Select stud and washer part number from table based on your panel thickness P

Part Number

See table

Stud, cup and spring shipped pre-assembled

Order retainer separately

Self-Ejecting Studs

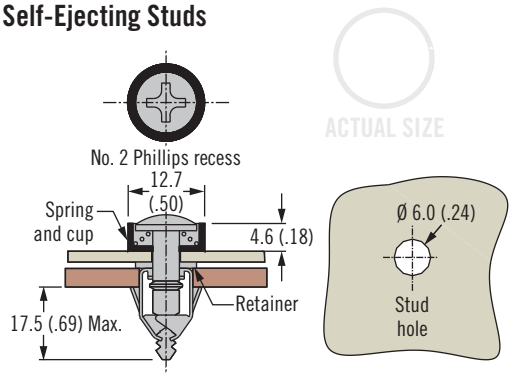

Retainer, Plastic

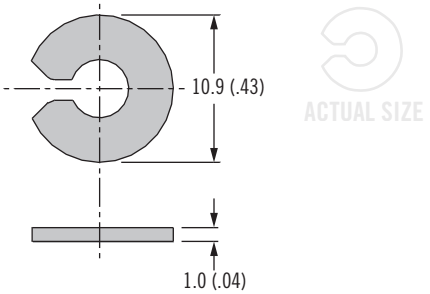

P Panel Thickness	Part Number	
	Black	Bright
0.5 - 3.0 (.02 - .12)	D7-290-718-191	D7-290-718-190
2.5 - 5.1 (.10 - .20)	D7-290-720-191	D7-290-720-190

Part Number
D7-275-203-040

Dimensions in millimeters (inch) unless otherwise stated

D7 *DZUS*® Pilot Quarter-Turn Fasteners

Receptacles

Standard

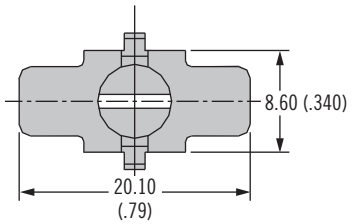

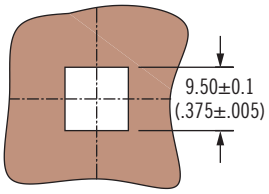

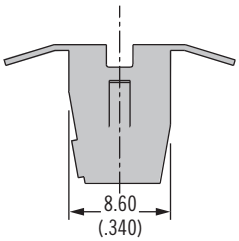

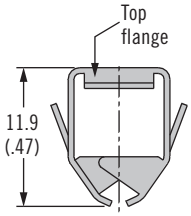

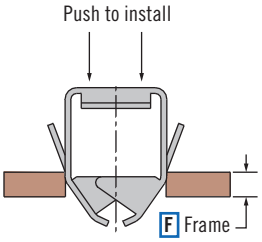

F Frame Thickness		Part Number
Min.	Max.	
0.63 (.025)	1.24 (.049)	D7-285-101-161
1.27 (.050)	1.75 (.069)	D7-285-102-161
1.78 (.070)	2.26 (.089)	D7-285-103-161

Material and Finish

Spring steel, zinc phosphate

Notes

Select receptacle based on frame thickness F

Part Number

See table

Lateral Tolerance

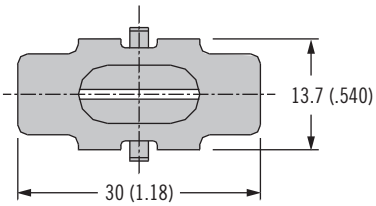

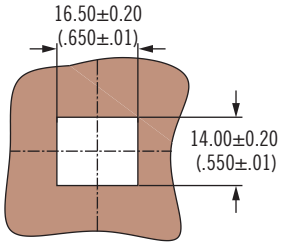

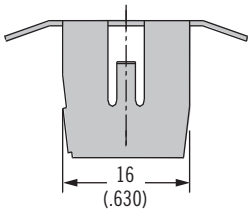

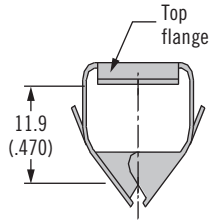

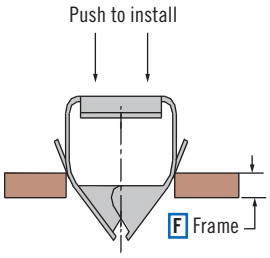

F Frame Thickness		Part Number
Min.	Max.	
0.63 (.025)	1.24 (.049)	D7-285-201-161
1.27 (.050)	1.75 (.069)	D7-285-202-161
1.78 (.070)	2.26 (.089)	D7-285-203-161
2.29 (.090)	2.77 (.109)	D7-285-204-161
2.79 (.110)	3.28 (.129)	D7-285-205-161

Material and Finish

Spring steel, zinc phosphate

Notes

Select receptacle based on frame thickness F

Part Number

See table

D7 *DZUS*® Arrow Quarter-Turn Fasteners

Assembly

- **Surface install**
- **Panel mounted assembly**

Material and Finish

Acetal, black

Performance Details

Flammability rating: UL94-HB

ASTM E-162 Flame spread Index: 130

D7 Arrow Installation notes

200 series:

1. Press receptacle into outer panel.
2. Press stud into receptacle.
3. Press and turn stud to latch
4. Turn stud 90 degree to unlatch.

2001 series:

1. Separate Stud and receptacle from runner.
2. Press receptacle into outer panel.
3. Press stud into receptacle.
4. Press and turn stud to latch
5. Turn stud 90 degree to unlatch

Part Number

See table

200 Series: Order one receptacle and stud from the same size separately

2001 Series: Complete assembly supplied with runner attached as shown

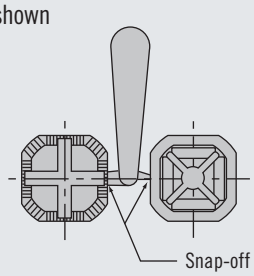

200 Series (order stud and receptacle separately)

Locked

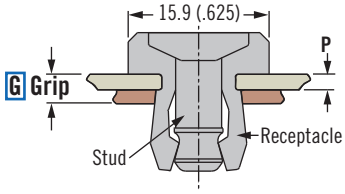

Released

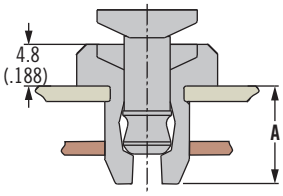

Hex Recess

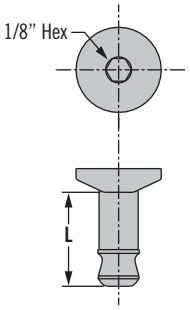

Slotted

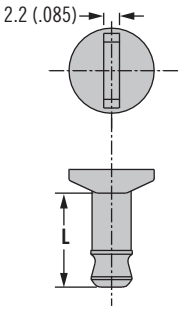

Knob

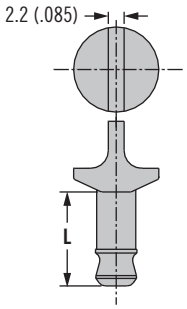

2001 Series

Latched

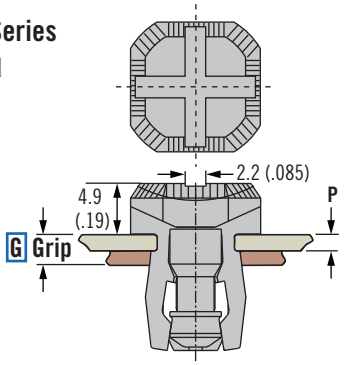

Unlatched

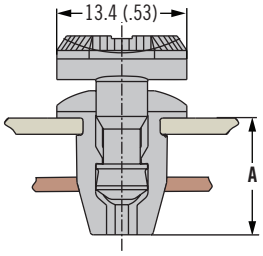

Installation

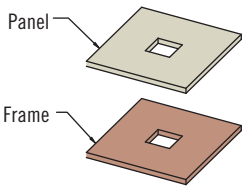

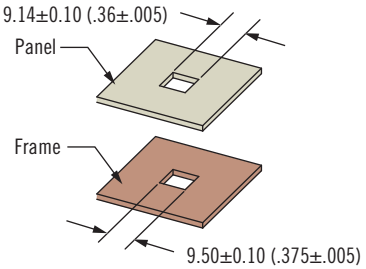

Series	A	Receptacle			Stud				
		P Panel Thickness		Part Number	G Grip Range		Part Number		
		Min.	Max.		Min.	Max.	Hex recess	Slotted recess	Knob
200	12.3 (.48)	0.50 (.020)	1.78 (.070)	D7-200-802-010	2.03 (.080)	5.08 (.200)	D7-200-701-010	D7-200-711-010	D7-200-721-010
	13.7 (.54)	1.80 (.071)	3.10 (.125)	D7-201-802-010	3.43 (.135)	6.35 (.250)	D7-201-701-010	D7-201-711-010	D7-201-721-010
2001	12.0 (.47)	Complete Assembly							
		0.05 (.020)	1.7 (.067)	~	2.5 (.098)	6.7 (.263)	D7-2001-010		

Dimensions in millimeters (inch) unless otherwise stated

NY *DZUS*® Q-Latch Quarter-Turn Fasteners

Assembly

- **Surface install**
- **Panel mounted assembly**

Material and Finish

Acetal copolymer resin, black

Latched

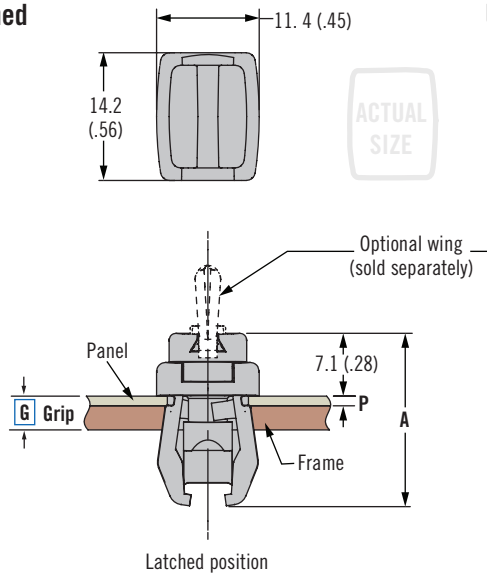

Unlatched

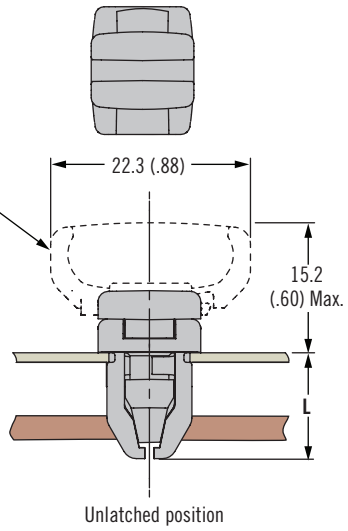

G	Grip Range		P Max.	L
	Min.	Max.		
1	1.50 (.059)	3.76 (148)	1.0 (.042)	12.7 (.50)
2	1.93 (.076)	4.19 (.165)	1.5 (.057)	12.95 (.51)
3	3.00 (.118)	5.26 (.207)	2.5 (.098)	13.97 (.55)
4	4.62 (.182)	6.88 (.271)	4.1 (.162)	15.75 (.62)

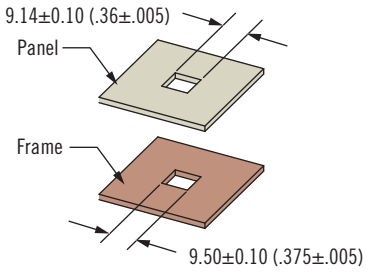

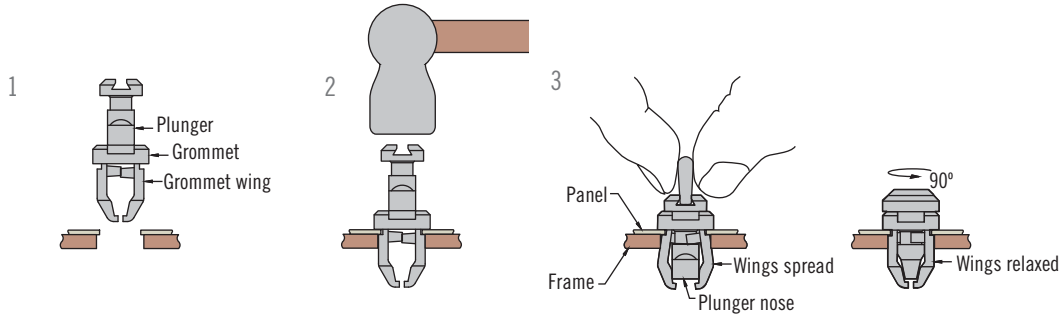

NY Q-latch Installation notes

1. Insert assembly into outer panel.
2. Strike head of assembly to captivate assembly into outer panel.
3. Turn stud 90 degree to latch and unlatch.
4. Slide wing into slot

Part Number Selection

Latch assembly shipped as one piece

Wing must be ordered separately

Assembly

NY - N6 - G - F

G Grip range

1 1.50 - 3.76 (.059 - 148)
2 1.93 - 4.19 (.076 - .165)
3 3.00 - 5.26 (.118 - .207)
4 4.62 - 6.88 (.182 - .271)

Optional Wing (order separately)

NY - H6 - F

F Finish

10 Polycarbonate, white
20 Polycarbonate, black
30 Polysulfone, black
31 Polysulfone, white

NY *NYLATCH* Panel Fastener

Push / pull style

- **Simple reusable panel fastener**
- **Multiple styles and sizes**
- **Non-conductive and non-corrosive materials**

Material and Finish

Grommet: Polycarbonate, black or white, or polysulfone, black

Plunger: Nylon, black or white, or polyester, black

Performance Details

Ultimate shear load:
4.8 (3/16): 200 N (45 lbf)
6.4 (1/4): 330 N (75 lbf)
7.9 (5/16): 667 N (150 lbf)

Max. operating temperature:
85°C (185°F)

Flammability rating:
See part number selection

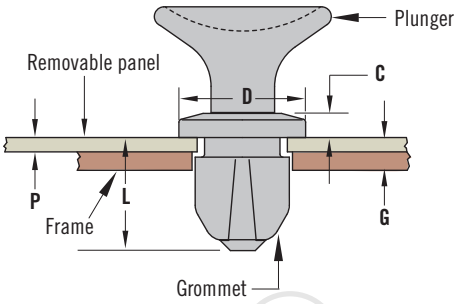

Head Style	Plunger Size					
	4.8 (3/16)		6.4 (1/4)		7.9 (5/16)	
Code	A	B	A	B	A	B
Easy Grip	12.7 (.50)	8.1 (.32)	14.4 (.57)	8.6 (.34)	16.0 (.63)	9.6 (.38)
Low Profile	6.6 (.26)	2.5 (.10)	7.1 (.28)	2.5 (.10)	7.6 (.30)	2.8 (.11)
Mini Grip	6.3 (.25)	6.6 (.26)	8.1 (.32)	7.1 (.28)	9.6 (.38)	7.6 (.30)

H Easy Grip

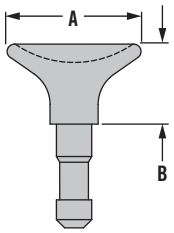

ACTUAL SIZE

H Low Profile

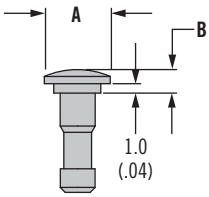

ACTUAL SIZE

H Mini Grip

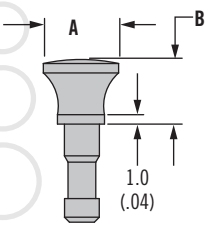

ACTUAL SIZE

3/16" Sizes Ø 4.8 (.188)

Sheet Capacity		Dimensions			Length Number	
G Range	P Max.	C Max.	L Max.	Ø D	G Grommet	L Plunger
1.4 - 3.9 (.056 - .153)	1.0 (.042)	1.6 (.065)	8.4 (.330)	6.5 (.255)	-31	-32
2.0 - 4.5 (.079 - .176)	1.6 (.065)	1.3 (.050)	8.8 (.346)		-32	-32
2.8 - 5.3 (.112 - .209)	2.5 (.098)		9.9 (.390)		-33	-33
3.9 - 6.3 (.152 - .249)	3.5 (.138)		10.9 (.430)		-34	-34

1/4" Sizes Ø 6.4 (.250)

Sheet Capacity		Dimensions			Length Number	
G Range	P Max.	C Max.	L Max.	Ø D	G Grommet	L Plunger
1.5 - 3.8 (.059 - .148)	1.0 (.042)	2.0 (.079)	9.4 (.371)	8.5 (.336)	-41	-42
2.1 - 4.4 (.084 - .173)	1.6 (.065)	1.6 (.064)	9.8 (.386)		-42	-42
3.0 - 5.3 (.118 - .207)	2.5 (.098)		10.9 (.430)		-43	-43
4.6 - 6.9 (.182 - .271)	4.1 (.162)		12.5 (.494)		-44	-44

5/16" Sizes Ø 7.9 (.313)

Sheet Capacity		Dimensions			Length Number	
G Range	P Max.	C Max.	L Max.	Ø D	G Grommet	L Plunger
1.5 - 3.8 (.059 - .148)	1.0 (.042)	2.4 (.095)	9.4 (.371)	10.7 (.420)	-51	-52
2.1 - 4.4 (.084 - .173)	1.6 (.065)	2.0 (.080)	9.8 (.386)		-52	-52
3.0 - 5.3 (.118 - .207)	2.5 (.098)		10.9 (.430)		-53	-53
4.6 - 6.9 (.182 - .271)	4.1 (.162)		12.5 (.494)		-54	-54
5.8 - 8.1 (.230 - .319)	5.3 (.210)		13.8 (.542)		-55	-55

Dimensions in millimeters (inch) unless otherwise stated

NY *NYLATCH* Panel Fastener

Push / pull style

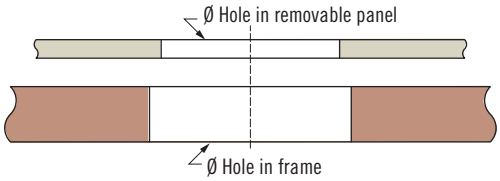

Size	Ø Removable Panel Hole	Ø Frame Hole
4.8 (3/16)	4.57 - 4.65 (.180 - .183)	4.8 - 4.88 (.189 - .192)
6.4 (1/4)	6.04 - 6.15 (.238 - .242)	6.35 - 6.45 (.250 - .254)
7.9 (5/16)	7.47 - 7.59 (.294 - .299)	8.1 - 8.2 (.319 - .323)

Part Number Selection

Order grommet and plunger separately

Plunger and grommet size code must match

Grommet Part Number

S Size code
- **3** Ø 4.8 (.188)
- **4** Ø 6.4 (.250)
- **5** Ø 7.9 (.313)

M Material and finish
- **20** Polycarbonate (UL 94 V-2) black
- **10** Polycarbonate (UL 94 V-2) white
- **30** Polysulfone (UL 94 HB) black

NY - S G - G - M

G Grommet length
Grommet length number
(See grommet and plunger tables on page 154)

Plunger Part Number

S Size code
- **3** Ø 4.8 (.188)
- **4** Ø 6.4 (.250)
- **5** Ø 7.9 (.313)

M Material and finish
- **50** Nylon (UL 94 V-2) black
- **51** Nylon (UL 94 V-2) white
- **60** Polyester (UL 94 V-0) black

NY - S P - L - H - M

L Plunger length
Plunger length number
(See grommet and plunger tables on page 154)

H Head style
- **1** Easy grip
- **3** Low profile
- **4** Mini grip

(Refer to the plunger length table for the head style availability)

56 Spring-Loaded Plunger

Lever Actuated · Press-in and Flare-in Styles · Small Size

- **Simplified positioning of sliding components**
- **Quick-release lever for fast installation and removal of components**
- **Designate access with color**

Material and Finish

Stud: Steel, hardened, zinc plated, chromate plus sealer
Ferrule: Steel, zinc plated, chromate plus sealer
Spring and Rivet: 300 series stainless steel, passivated
Lever: Glass-filled nylon, UL94-V0 Rated
Washer: PC/ABS, UL94-V0 Rated

Part Number

See table

Specifying Prism Color

To indicate color, change the last three digits of the part number.
Example: 56-461-000, black; 56-461-013, red

Press-in Style

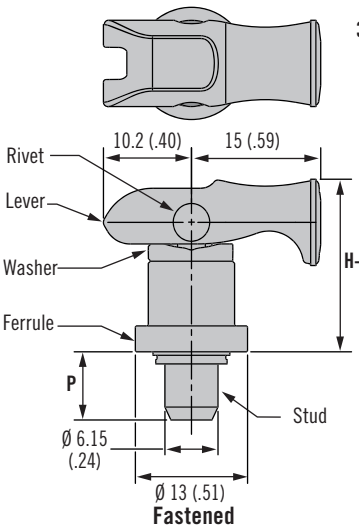

Installation:
1. Prepare hole in panel.
2. Place plunger (in unfastened orientation) into hole.
3. Provide solid back-up under ppanel using installation tool press ferrule until collar is firmly against panel

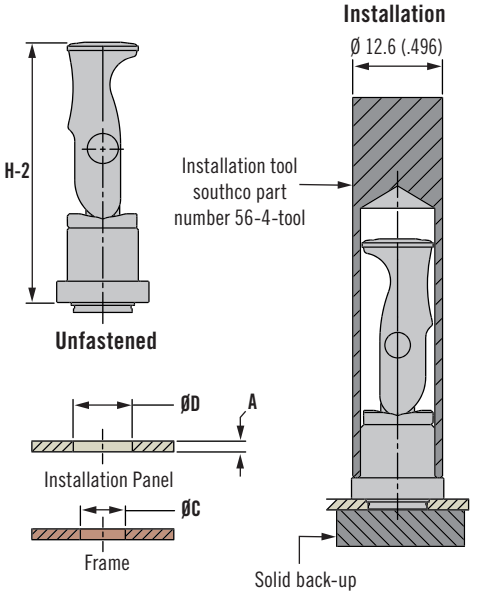

Flare-in Style

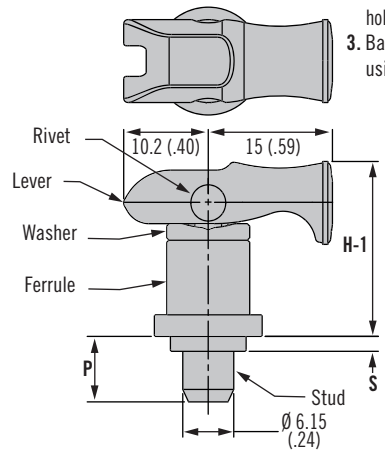

Installation:
1. Prepare hole in Panel.
2. Place plunger (in open orientation) into hole until collar is firmly against panel
3. Back-up collar with installation tool using flare tool ferrule into panel

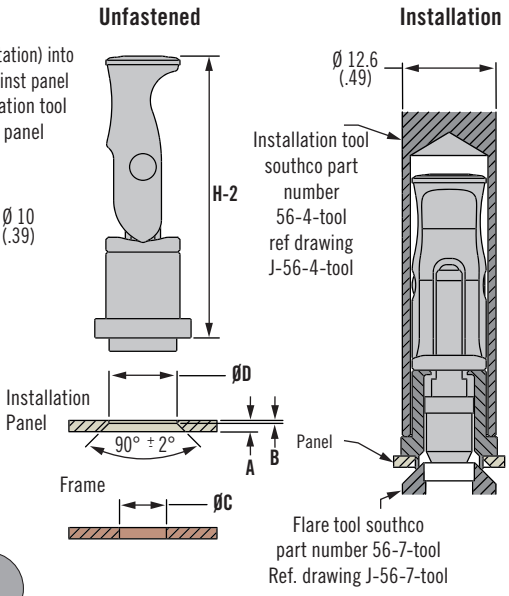

000 Black (shown in table) | **008** Blue | **013** Red | **014** Green | **Your color** contact Southco

Outer Panel		P	B	S	Installation	Part Number	H-1	H-2	Ø D	Ø C
A Min.	A Max.					Hold-Open				
1.52 (.06)	3.8 (.15)	8 (.31)	-	-	Press-in	56-461-**000**	20 (.79)	36.7 (1.44)	$8.33^{+0.07}_{-0.0}$ ($.328^{+.003}_{-.000}$)	$6.35^{+0.07}_{-0.0}$ ($.250^{+.003}_{-.000}$)
1.52 (.06)	3.18 (.125)	8 (.31)	0.4 (.02)	1.8 (.07)	Flare-in	56-471-1-**000**	21.1 (.83)	38.1 (1.5)	$9.2^{+0.1}_{0.0}$ ($.362^{+.004}_{-.000}$)	
3.18 (.125)	4.7 (.185)	9.5 (.37)	1.9 (.08)	3.3 (.13)	Flare-in	56-471-2-**000**	19.6 (.77)	36.6 (.90)		
0.8 (.031)	3.2 (.125)	8.2 (.32)	-	-	Thread-in	56-481-**000**	19.7 (.78)	36.7 (1.44)	$9.12^{+0}_{0.08}$ ($.359^{+0}_{-.003}$)	

Dimensions in millimeters (inch) unless otherwise stated

DZUS® | southco®

56 Spring-Loaded Plunger

Lever Actuated · Thread-in Style · Small Size

Thread-in Style

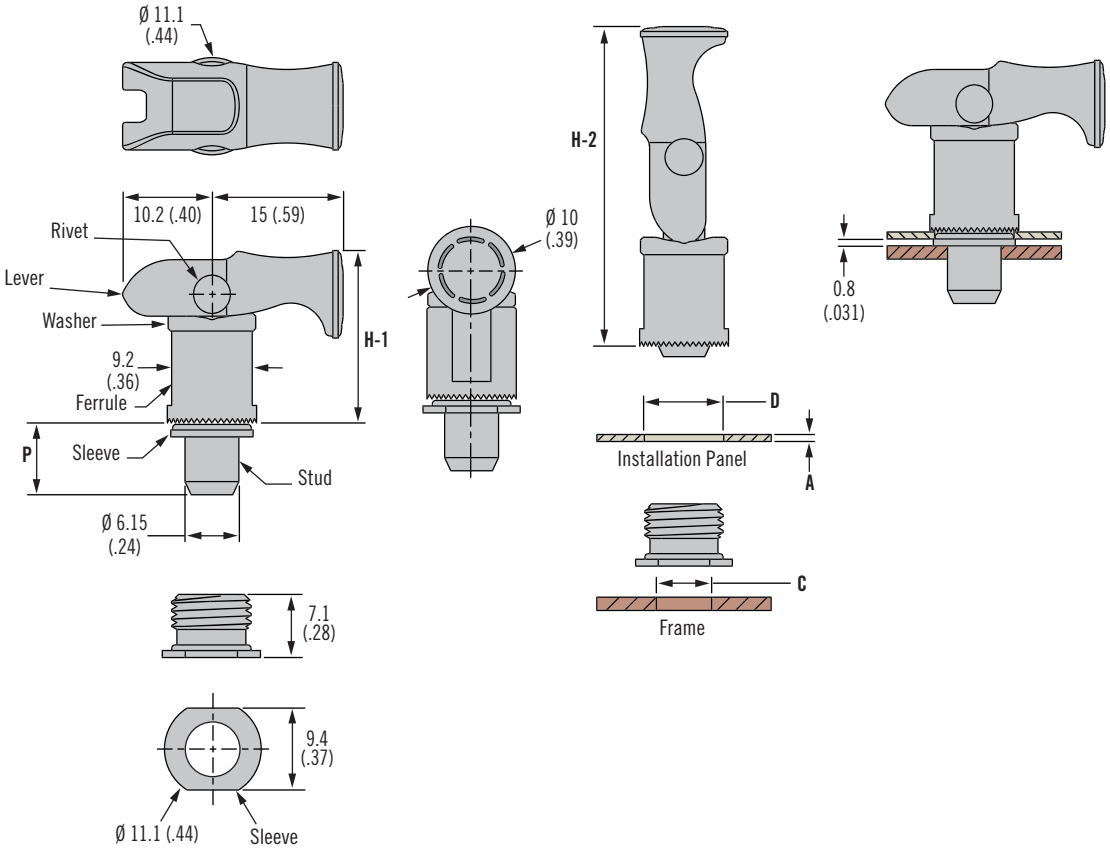

- **Simplified positioning of sliding components**
- **Quick-release lever for fast installation and removal of components**
- **Designate access with color**

Material and Finish

Stud: Steel, hardened, zinc plated, chromate plus sealer
Ferrule and Sleeve: Steel, zinc plated, chromate plus sealer
Spring and Rivet: 300 series stainless steel, passivated
Lever: Glass-filled nylon, UL94-V0 Rated
Washer: PC/ABS, UL94-V0 Rated

Part Number

See table

Installation tool

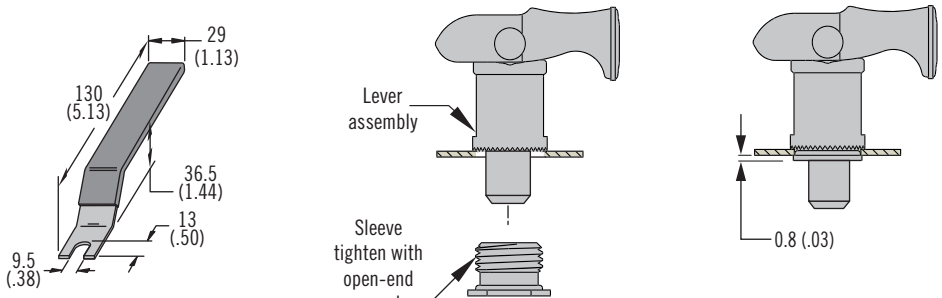

Tool Part Number
56-0-22041-04

56 Spring-Loaded Plunger

Flare-in style – Miniature, Small and Large

- **Simplified positioning of sliding components**
- **Quick-release hinge for removable door**
- **Fast installation and removal of components**
- **Designate access with color**

Material and Finish

End cap: Steel, zinc plated, chromate, plus sealer
Ferrule: Aluminum, natural
Stud: Steel, hardened, zinc plated, chromate, plus sealer

Knob: (Prism plungers only)
PC/ABS, UL94-V0 Rated

Spring: 300 series stainless steel, passivated

Installation Notes

Press with approximately 2,500 N (562 lbf) (Large and Small), 2,000 N (450 lbf) (Mini) until ferrule is flared into the countersink in the panel.
A solid back-up tool must be used for proper installation

Install Tool

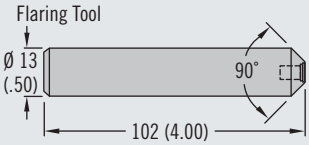

Applications

Retractable Hinge

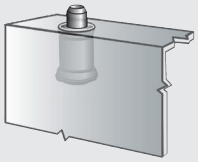

Positioning / Secondary Catch

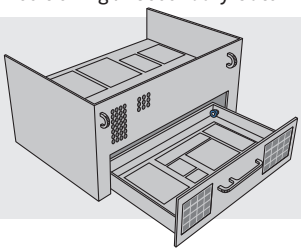

Quick Installation

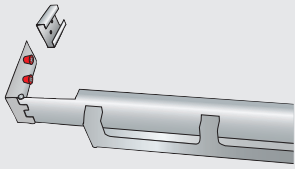

Flare-in style

Bright - Miniature and Small

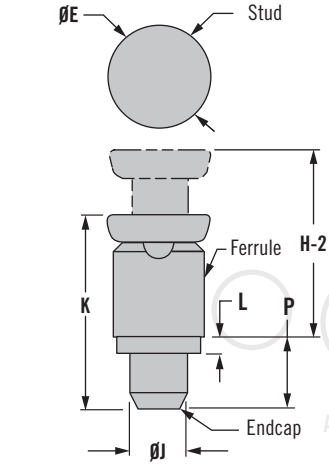

Prism - Miniature and Small

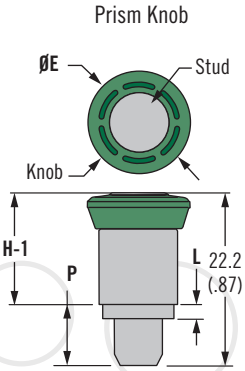

Prism - Large

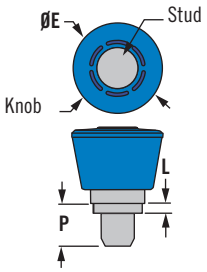

000 Black (shown in table)

008 Blue

013 Red

014 Green

Your color contact Southco

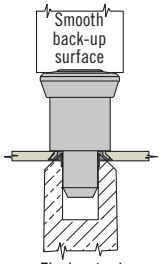

Part number:
47-110 (Miniature)
56-7-TOOL (Large and Small)

Part Number

See table

Specifying Prism Color

To indicate color, change the last three digits of the part number.
Example:
56-161-000, black
56-161-013, red

Outer Panel Thickness		P	Size	Knob Style	Part Number		H-1	H-2	Ø E	K	L	B	Ø J	Ø D	Ø C
A Min.	A Max.				Hold-Open	Without									
0.8 (.031)	1.5 (.06)	4.4 (.17)	Mini	Bright	56-21-1-15	56-20-1-15	9.9 (.39)	13.6 (.54)	8.5 (.33)	14.3 (.56)	1.0 (.04)	0.41 (.016)	4.29 (.169) MAX	$6.76^{+0.1}_{0.0}$ ($.266^{+.004}_{.000}$)	$4.3^{+0.13}_{0.0}$ ($.169^{+.005}_{.000}$)
				Prism	56-121-1-**000**	56-120-1-**000**	10.6 (.42)	14.3 (.56)	9 (.35)	15 (.59)					
				4C-Prism	56-321-1-**000**	56-320-1-**000**	10.6 (.42)	14.3 (.56)	9 (.35)	15 (.59)					
1.5 (.06)	2.3 (.09)	5.2 (.20)		Bright	56-21-2-15	56-20-2-15	9.1 (.36)	12.8 (.50)	8.5 (.33)	14.3 (.56)	1.78 (.07)				
				Prism	56-121-2-**000**	56-120-2-**000**	9.8 (.39)	13.5 (.53)	9 (.35)	15 (.59)					
				4C-Prism	56-321-2-**000**	56-320-2-**000**	9.8 (.39)	13.5 (.53)	9 (.35)	15 (.59)					
1.52 (.06)	3.17 (.125)	7.9 (.31)	Small	Bright	56-71-1-15	56-70-1-15	13.7 (.54)	19.8 (.78)	11.5 (.45)	21.5 (.85)	1.78 (.07)	0.41 (.016)	6.33 (.249)	$9.19^{+0.08}_{0.0}$ ($.362^{+.003}_{.000}$)	$6.4^{+0.1}_{0.0}$ ($.250^{+.005}_{.000}$)
				Prism	56-171-1-**000**	56-170-1-**000**	14.5 (.57)	20.5 (.81)	13.3 (.52)	22.2 (.87)					
				4C-Prism	56-371-1-**000**	56-370-1-**000**	14.5 (.57)	20.5 (.81)	13.3 (.52)	22.2 (.87)					
			Large	Prism	56-271-1-**000**	56-270-1-**000**	14.5 (.57)	20.5 (.81)	17 (.67)	22.2 (.87)					
3.17 (.125)	4.7 (.185)	9.4 (.37)	Small	Bright	56-71-2-15	56-70-2-15	12.2 (.48)	18.2 (.72)	11.5 (.45)	21.5 (.85)	3.3 (.13)	1.52 (.06)			
				Prism	56-171-2-**000**	56-170-2-**000**	12.9 (.51)	19 (.75)	13.3 (.52)	22.2 (.87)					
				4C-Prism	56-371-2-**000**	56-370-2-**000**	12.9 (.51)	19 (.75)	13.3 (.52)	22.2 (.87)					
			Large	Prism	56-271-2-**000**	56-270-2-**000**	12.9 (.51)	19 (.75)	17 (.67)	22.2 (.87)					

Dimensions in millimeters (inch) unless otherwise stated

56 Spring-Loaded Plunger

Press-in style – Miniature, Small and Large

Press-In Style

Prism - Miniature and Small

Prism Knob

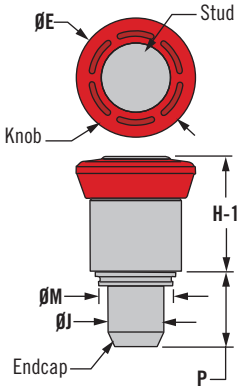

4C-Prism Knob

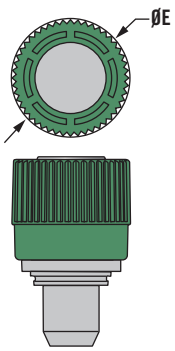

Prism - Large

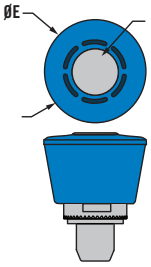

Bright - Miniature and Small

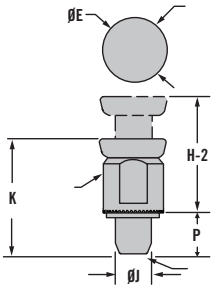

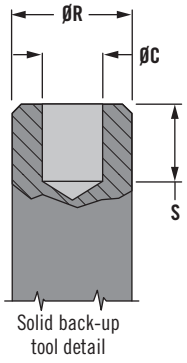

(Customer Supplied)

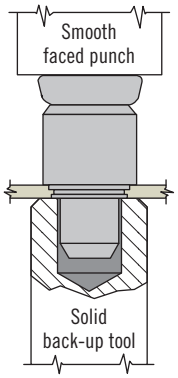

ACTUAL SIZE

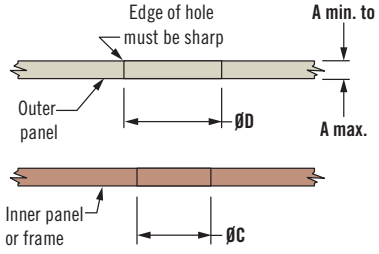

000 Black (shown in table)

008 Blue

013 Red

014 Green

Your color contact Southco

- **Simplified positioning of sliding components**
- **Quick-release hinge for removable door**
- **Fast installation and removal of components**
- **Designate access with color**

Material and Finish

End cap: Steel, zinc plated, chromate, plus sealer

Ferrule and stud: Steel, (Large and Small hardened), zinc plated, chromate plus sealer

Knob: (Prism plungers only) PC/ABS, black, UL94-V0 Rated

Spring: 300 series stainless steel, passivated

Installation Notes

Press knob with approximately 13,400 N (3000 lbf) (Large and Small), 8000 N (1800 lbf) (Mini) for steel, 6700 N (1500 lbf) (Large and Small), 5000 N (1124 lbf) (Mini) for aluminum panels until ferrule sits flush with panel. A solid back-up tool must be used for proper installation.

Part Number

See table

Specifying Prism Color

To indicate color, change the last three digits of the part number.
Example:
56-161-000, black; 56-161-013, red

Outer Panel Thickness		P	Size	Knob Style	Part Number		H-1	H-2	E	K	ØJ	ØM	ØD	ØC	ØR	S
A Min.	A Max.				Hold-Open	Without										
0.8 (.031)	1.5 (.06)	4.4 (.17)	Mini	Bright	56-11-15	56-10-15	9.2 (.36)	12.9 (.51)	8.5 (.33)	13.6 (.54)	4.29 (.169) MAX	6.6 (.26)	$6.7^{+0.08}_{-0.0}$ ($.264^{+.003}_{-.000}$)	$4.3^{+0.13}_{-0.0}$ ($.169^{+.005}_{-.000}$)	9 (.35) MIN	4.5 (.18) MIN
				Prism	56-111-**000**	56-110-**000**	9.9 (.39)	13.6 (.54)	9 (.35)	14.3 (.56)						
				4C-Prism	56-311-**000**	56-310-**000**	9.9 (.39)	13.6 (.54)	9 (.35)	14.3 (.56)						
1.52 (.06)	3.81 (.15)	8.2 (.32)	Small	Bright	56-61-15	56-60-15	12.2 (.48)	19.3 (.76)	11.5 (.45)	20.4 (.80)	6.33 (.249)	8.26 (.325)	$8.4^{+0.0}_{-0.1}$ ($.328^{+.003}_{-.000}$)	$6.4^{+0.1}_{-0.0}$ ($.250^{+.005}_{-.000}$)	13 (.50) MIN	8.26 (.325) MIN
				Prism	56-161-**000**	56-160-**000**	13 (.51)	20 (.79)	13.3 (.52)	21.1 (.83)						
				4C-Prism	56-361-**000**	56-360-**000**	13(.51)	20 (.79)	13.3 (.52)	21.1 (.83)						
			Large	Prism	56-261-**000**	56-260-**000**	13 (.51)	20 (.79)	17 (.67)	21.1 (.83)						

56 Spring-Loaded Plunger

Thread-in style - Miniature, Small and Large

- **Simplified positioning of sliding components**
- **Quick-release hinge for removable door**
- **Fast installation and removal of components**
- **Designate access with color**

Material and Finish

Stud: Steel, hardened, zinc plated, chromate plus sealer

Ferrule and Sleeve: Steel, zinc plated, chromate plus sealer

Spring: 300 series stainless steel passivated

Prism Knob: PC/ABS, UL94-V0 Rated
End cap: Steel, zinc plated, chromate, plus sealer

(Aluminum knob plungers only)
Detent washer: Steel, zinc plated (Hold-open only)

Part Number

See table

Thread-in Style

Prism - Miniature and Small

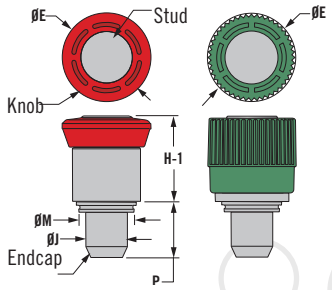

Prism - Large

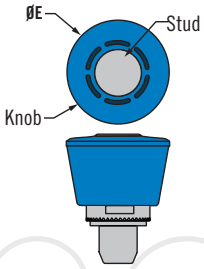

Bright Steel Knob

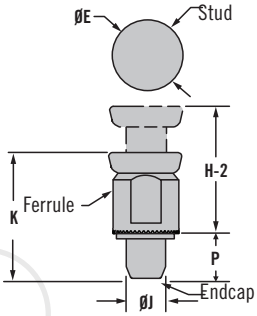

Bright Aluminum Knob

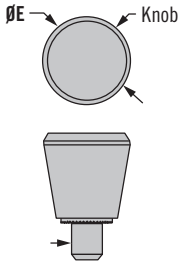

ACTUAL SIZE

Specifying Prism Color

To indicate color, change the last three digits of the part number.
Example: 56-130-000, black; 56-130-013, red

000	008	013	014	Your color
Black (shown in table)	Blue	Red	Green	contact Southco

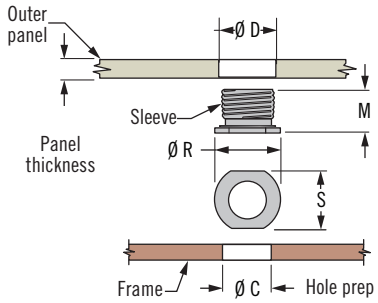

Installation tool

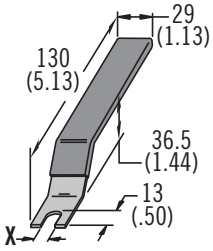

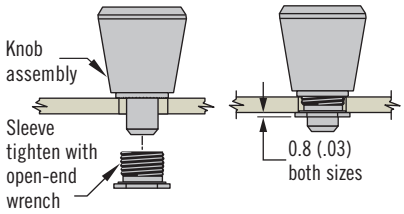

Size	X (Tool)	Tool Part Number
Mini	7.1 (.28)	56-0-22041-03
Small	9.5 (.38)	56-0-22041-04
Large		

Outer Panel Min.	Outer Panel Max.	P	Size	Knob Style	Part Number Hold-Open	Part Number Without	H-1	H-2	Ø E	K	Ø J	Ø C	Ø D	M	Ø R	S
0.8 (.031)	1.5 (.06)	4.4 (.17)	Mini	Bright	—	56-30-15	9.2 (.36)	12.9 (.51)	8.5 (.335)	13.6 (.54)	4.29 (.169) MAX	4.3 +0.08/-0.0 (.17 +.003 -.000)	7.14 ±0.08 (.281 ±.003)	5.1 (.20)	9 (.35)	7 (.28)
				Prism	—	56-130-**000**	9.9 (.39)	13.6 (.54)	9 (.354)	14.3 (.56)						
				4C-Prism	—	56-330-**000**	9.9 (.39)	13.6 (.54)	10 (.354)	14.3 (.56)						
0.8 (.031)	3.2 (.13)	6.9 (.27)	Small	Bright	—	56-80-15	12.2 (.48)	20.4 (.80)	11.5 (.45)	20.3 (.80)	6.33 (.249)	6.35 + 0.08/-0.0 (.250 +.003/.000)	9.12 ±0.08 (.359 ± .003)	7.1 (.28)	11.1 (.44)	9.4 (.37)
				Prism	—	56-180-**000**	13 (.51)	21.1 (.83)	13.3 (.52)	21 (.83)						
				4C-Prism	—	56-380-**000**	13 (.51)	21.1 (.83)	13 (.51)	21 (.83)						
			Large	Prism	—	56-280-**000**	14.1 (.56)	21.1 (.83)	17 (.67)	21 (.83)						
0.64 (.025)	1.5 (.06)	6.4 (.17)	Small	Aluminum	56-10-301-20	56-99-196-20	13.4 (.53)	18.4 (.72)	13.5 (.53)	19.8 (.78)	4.7 (.183)	4.78 +0.08/-0.03 (.17 +.003 -.000)	7.14 ±0.08 (.281 ±.003)	5.6 (.20)	9 (.35)	7 (.28)
0.8 (.031)	3.2 (.13)	7.9 (.31)	Large	Aluminum	56-10-401-20	56-99-197-20	18.3 (.72)	24.6 (.97)	17.5 (.69)	26.2 (1.03)	6.2 (.245)	6.35 + 0.08/-0.08 (.250 +.003/.000)	9 .12 ±0.08 (.359 ±.003)	7.1 (.28)	11.1 (.44)	9.4 (.37)

Dimensions in millimeters (inch) unless otherwise stated

TL Slide Latch

Steel · Slide to close

- **Slide to secure**
- **Vibration dampening**

Material and Finish

Steel, zinc plated or stainless steel

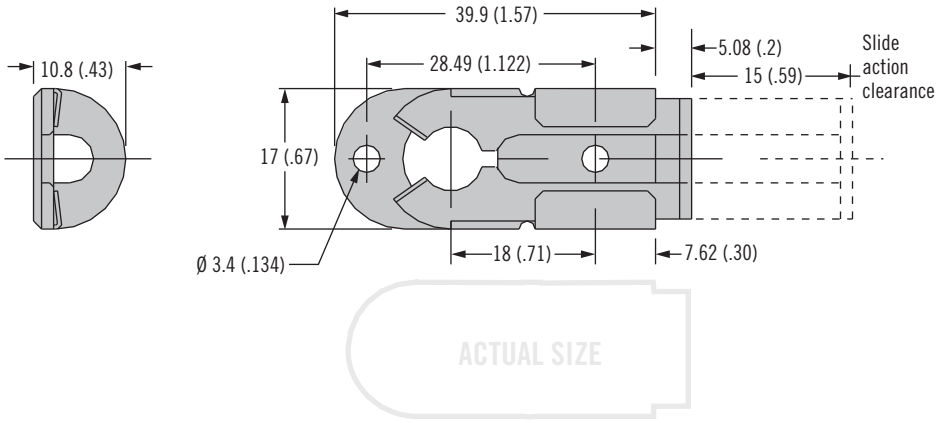

Surface Mount

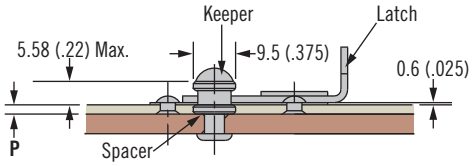

Concealed Mount

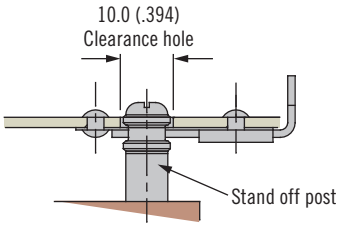

Panel Thickness	Required Number of Spacers
1.17 - 2.03 (.046 - .080)	None
2.05 - 3.25 (.081 - .128)	One
3.28 - 4.06 (.129 - .160)	Two

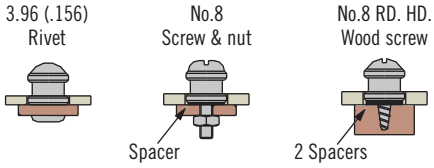

Inside diameter of keeper and spacer: 4.4 (0.17)

Material	Latch		Keeper	Spacer
	Surface Mount	Concealed Mount		
Steel, zinc plated	TL-05-100-07	TL-05-110-07	TL-05-117-07	TL-05-114-07
Stainless Steel	TL-05-100-52	TL-05-110-52	TL-05-117-52	~

Part Number

See table

19 Swell Action Latch

Plastic

- **Accommodates misalignment**
- **Vibration dampening**

Material and Finish

Nylon and glass-filled nylon black with rubber bushing

Performance Details

Frame thickness	Rated load (short term)
1.5 (.059)	400 N (90lbf)
2.5 (.098)	690 N (155lbf)
3.2 (.125)	620 N (140lbf)
4.8 (.190)	190 N (43lbf)

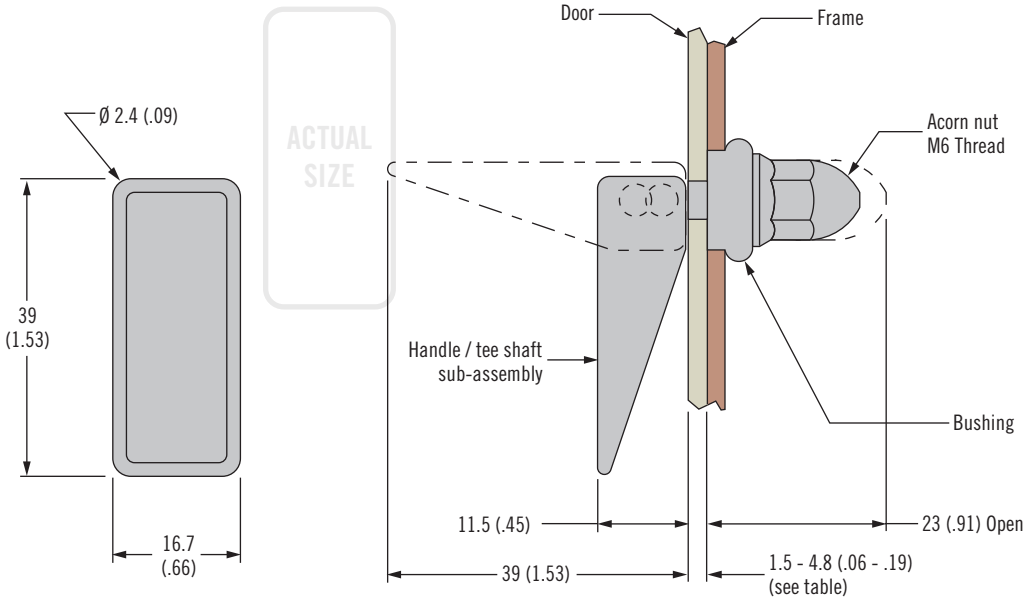

Door Thickness	Use Washer?	Adjustment Required
1.7±0.2 (.07±.01)	Yes	No
1.9 - 2.3 (.08 - .09)	Yes	Yes
2.5±0.2 (.10±.01)	No	No
2.7 - 4.8 (.11 - .19)	No	Yes

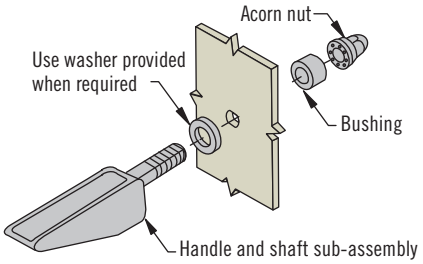

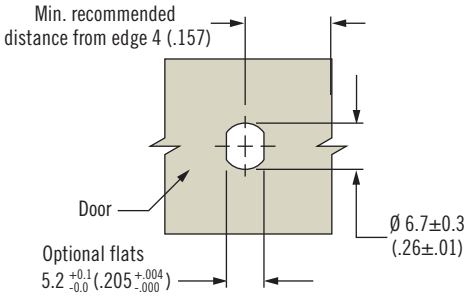

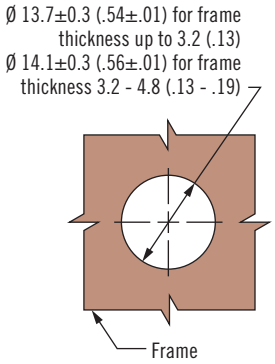

Part Number

See table

Part Number	Packaging
19-51-01	Components bulk packaged
19-54-01	1 Assembly per bag

Dimensions in millimeters (inch) unless otherwise stated

19 Swell Action Latch

Stainless Steel · Zinc

- **Accommodates misalignment**
- **Vibration dampening**

Material and Finish

Zinc alloy, black powder coated, acetal and rubber bushing

Stainless steel, natural or polished, acetal and rubber bushing.

Performance Details

Frame thickness	Rated load (short term)
1.2 (.05) to 3.2 (.13)	330 N (75 lbf)
3.2 (.13) to 4.8 (.19)	660 N (150 lbf)
4.8 (.19) to 6.4 (.25)	550 N (125 lbf)
6.4 (.25) and Up	220 N (50 lbf)

Installation Notes

Maximum tightening torque on mounting nut: 1.0 N·m (9 in·lbf)

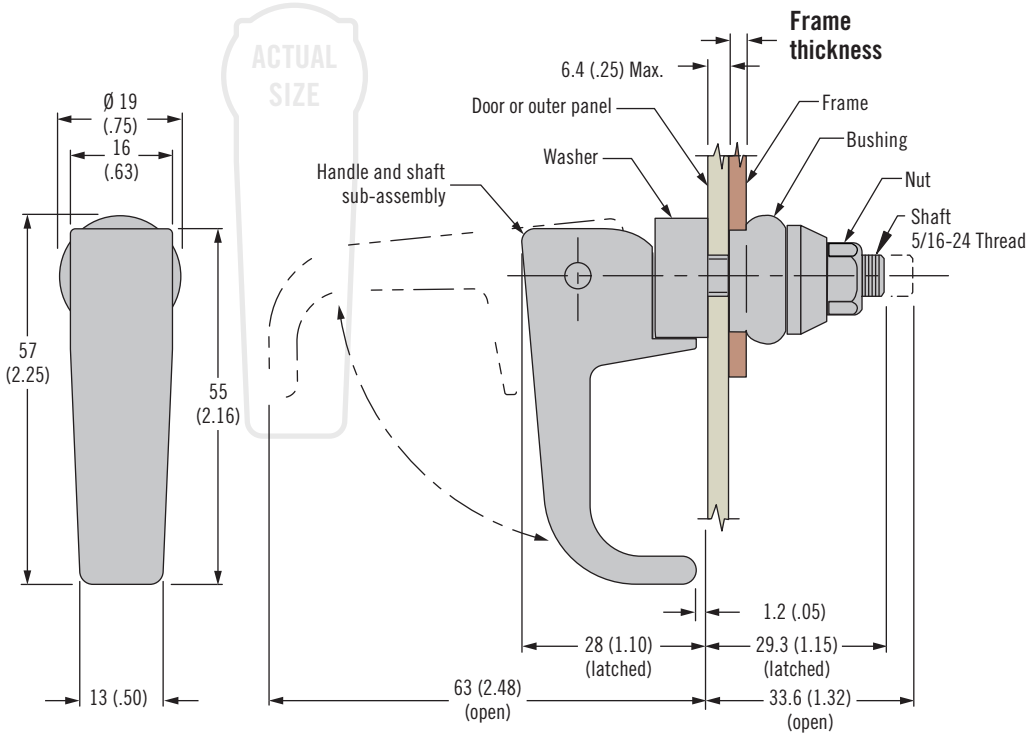

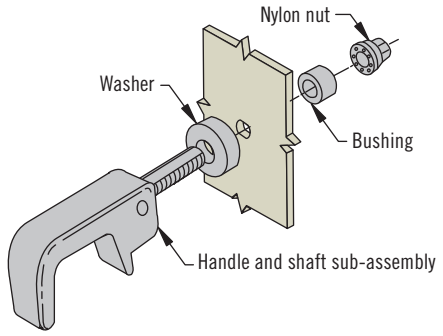

Frame Thickness	Ø K +0.5 (.031) -0.0 (.000)
1.2 - 3.2 (.05 - .13)	19 (.750)
3.2 - 4.8 (.13 - .19)	19.5 (.766)
4.8 - 6.4 (.19 - .25)	20 (.781)
6.4 (.25) and up	20.5 (.797)

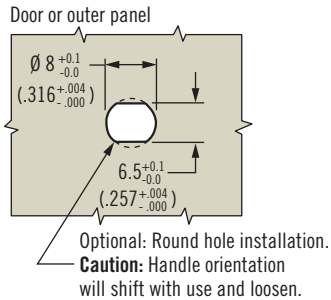

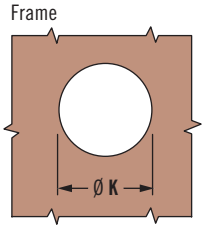

Part Number

See table

Material	Part Number	Finish
Zinc alloy	19-14-10	Black powder coated
Stainless Steel	19-14-23	Natural
Stainless Steel	19-14-24	Polished

19 Swell Action Latch

Plastic · Flush

- **Flush low profile design**
- **Accommodates misalignment**
- **Vibration resistant**

Material and Finish

Nylon black with stainless steel mounting bracket and rubber bushing

Set tool: 1095 Steel, zinc plated

Performance Details

Series	Frame thickness	Rated load (short term)
19-83-10	0.5 - 3.2 (.016 - .13)	180 N (40lbf)
19-93-10	0.5 - 3.2 (.016 - .13)	440 N (100lbf)
	3.2 - 4.8 (.125 - .19)	330 N (75lbf)

Installation notes

Position bracket and retainer over stud and strike set tool. Adjust mounting nut to set latching tension.

Set tool

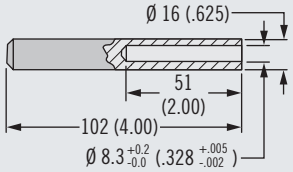

Tool part number: 17-10019-11

Part Number

See table

19-83-10

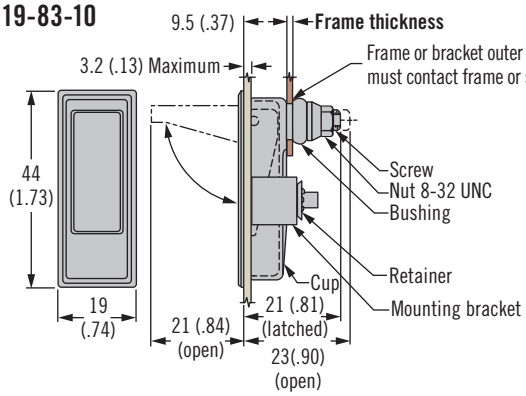

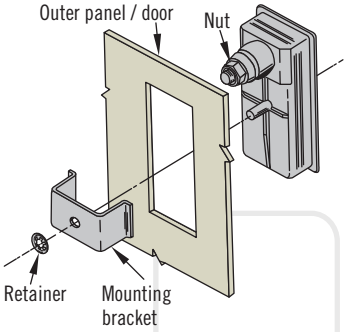

19-93-10

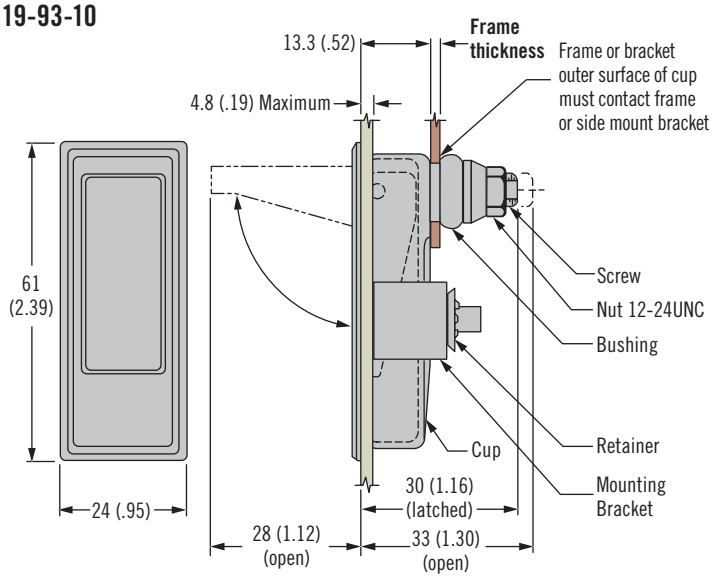

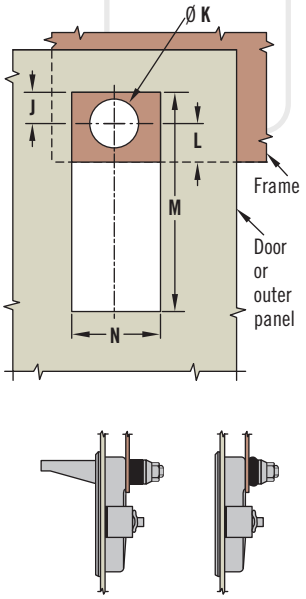

Part Number	Max. Misalignment Between Centerlines of Panel Hole and Frame Hole	Frame or Bracket					Outer Panel / Door	
		Rated Load (Short Term)	Frame Thickness	J±0.3 (.010)	Ø K +0.5 (.020) -0.0 (.000)	L Max.	M	N
19-83-10	0.4 (.015)	180 N (40lbf)	3.2 (.13) Max.	6 (.234)	9.5 (.375)	11 (.45)	41.5 +0.4 -0.0 (1.64 +.005 -.0)	16.5 +0 -0.4 (.640 +0 -.005)
19-93-10	0.6 (.025)	440 N (100lbf)	Up to 3.2 (.13)	8 (.312)	13.5 (.531)	15.(.56)	57.5±.02 (2.265±.005)	20.5 +0.4 -0.0 (.812 +0 -.005)
	0.8 (.030)	330 N (75lbf)	3.2 - 4.8 (.13 - .19)		14 (.56)			

Dimensions in millimeters (inch) unless otherwise stated

DZUS® | southco®

19 Swell Action Latch

Plastic

- **Accommodates misalignment**
- **Vibration dampening**

19-81-10

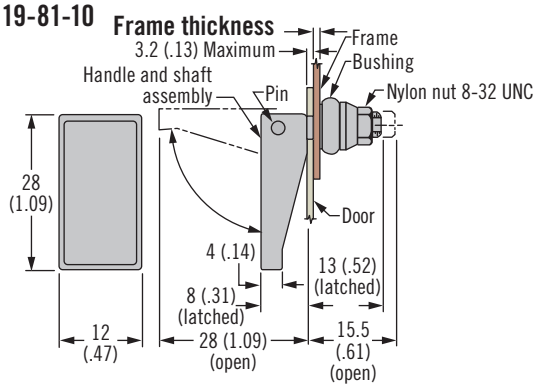

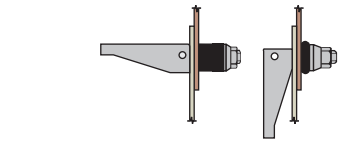

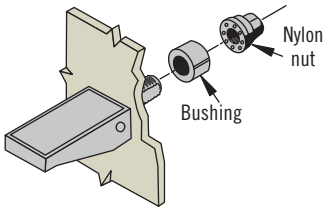

ACTUAL SIZE

19-91-10

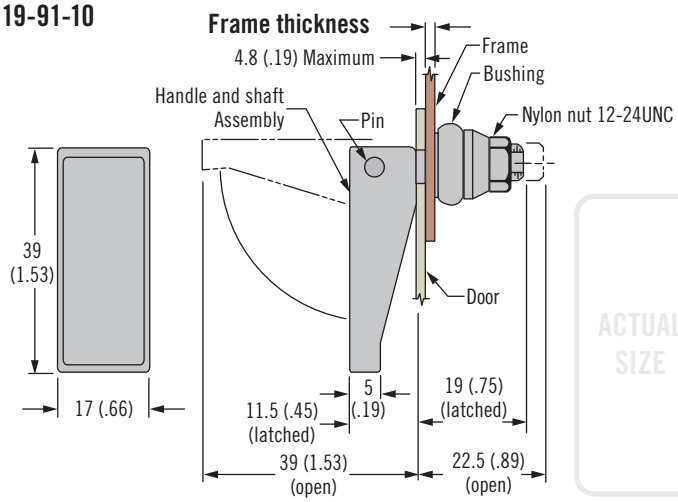

ACTUAL SIZE

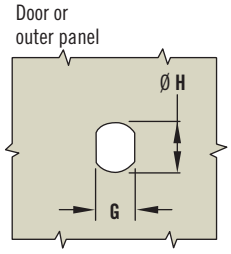

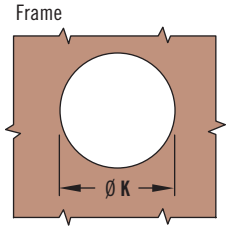

Part Number	G +0.1 (+.004) -0.0 (-.000)	H +0.1 (+.004) -0.0 (-.000)	Frame Thickness	K +0.5 (+.030) -0.0 (-.000)
19-81-10	3.3 (.130)	4.1 (.161)	3.2 (.13) Maximum	9.5 (.375)
19-91-10	4.5 (.177)	5.8 (.228)	Up to 3.2 (.13)	13.5 (.531)
			3.2 - 4.8 (.13 - .19)	14 (.547)

Accessories - Side mount bracket

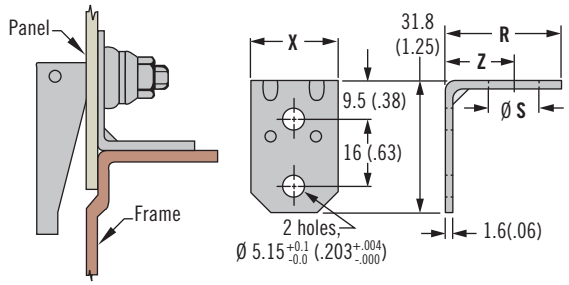

Latch Part Number	Ø S	R	X	Z	Bracket Part Number
19-81-10 and 19-83-10	9.5 (.38)	27 (1.06)	20.5 (.81)	16.7 (.66)	19-0-15666-11
19-91-10 and 19-93-10	13.5 (.53)				19-0-15665-11

Material and Finish

Nylon and glass-filled nylon black with rubber bushing

Performance Details

Series	Frame thickness	Rated load (short term)
19-81-10	0.5 - 3.2 (.016 - .13)	180 N (40lbf)
19-91-10	0.5 - 3.2 (.016 - .13)	440 N (100lbf)
	3.2 - 4.8 (.125 - .19)	330 N (75lbf)

Installation notes

Maximum tightening torque on mounting nut: 1 N•m (9 in•lbf)

Part Number

See table

CAPTIVE SCREWS

Metric/Unified Threaded Fasteners

Pages 512-561, 570

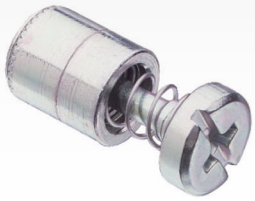

Captivating fasteners to panels prevents the loss of hardware and the potential damage caused by dropping fasteners into operating equipment. Captive screws are especially useful for applications requiring repetitive fastening. Numerous Southco styles are available to suit specific space and access requirements.

SOUTHCO® Captive Screws are available in a variety of panel mounting styles and head styles to suit industry-standard and application requirements. The overmolded 4C Captive Screws are available in several screw sizes and feature colored molded polycarbonate / ABS knobs that enable you to coordinate color to design schemes or to differentiate access points for quick identification.

- High strength screws for use with high torque drivers
- Increased strength and corrosion-resistance
- Standard and custom colors available
- Variety of installation styles
- Tool or hand operation
- Modifications and custom solutions are available to suit individual application requirements

F5

52

5T

N7

4C

47

Fast-Lead Screws

Pages 562-569

When flexibility is of the utmost importance, Southco's line of fast-lead screw fasteners provide access in just a few turns. The coarse pitch of the fast-lead screw, when matched with the broad range of receptacles, provides built in vibration resistance over a wide range of panel thicknesses.

- High strength fastening system
- Vibration resistant
- Fast access in just a few turns
- Tolerant of material variation

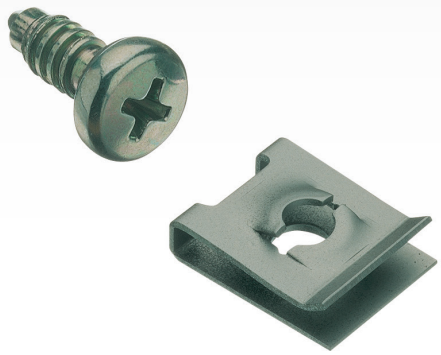

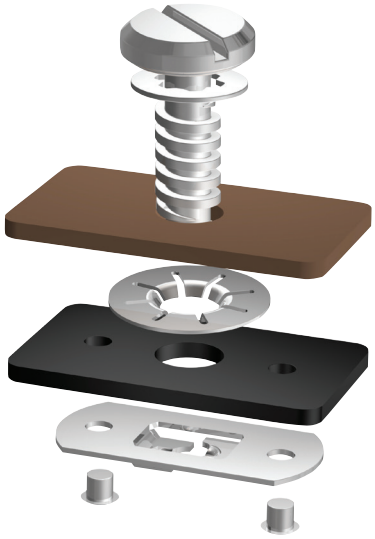

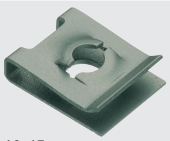
09, 12, 17

09, 12, 17

09, 12, 17

09, 12, 17

09, 12, 17

09, 12, 17

Captive Screws

Metric/Unified threaded fasteners selection guide

Use this selection guide to help make the right choice of captive screw for your application

Contact Southco

Design Considerations:

- Panel Material
- Panel Thickness
- Environment
- Alignment Tolerance
- Space Available
- Recess Requirements
- Strength Required

Heat Sink Installation

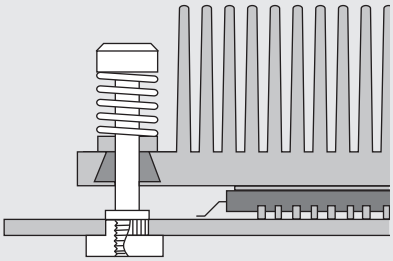

		Product Class	THREADED SIZE										TOOL RECESS				
			M3	M3.5	M4	M5	M6	4-40	6-32	8-32	10-32	1/4-20	Slot	Phillips	*TORX*®	*TORX*® / Slot	Phillips / Slot
PAGES 516-535, 548		47	✔	✔	✔	✔	✔	✔	✔	✔	✔	✔	✔	✔	✔	✔	✔
PAGES 536-541, 549		4C	✔		✔	✔		✔	✔		✔			✔		✔	✔
PAGES 542-545		47 Restricted access			✔	✔		✔	✔	✔	✔		✔	✔	✔		
PAGES 550, 552-557		52	✔		✔			✔	✔							✔	✔
PAGE 560		5T	✔	✔				✔	✔							✔	✔
PAGE 559		F5	✔		✔			✔	✔	✔			✔	✔			
PAGE 561		N7 Captive Nut	✔		✔	✔	✔	✔	✔	✔	✔	✔					

TORX® is a registered trademark of *CAMCAR* Innovations

Dimensions in millimeters (inch) unless otherwise stated

southco®

Rapid Assembly Serviceability

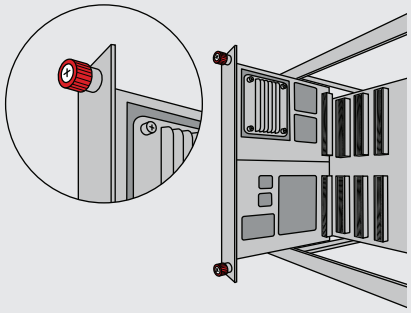

Color Coded

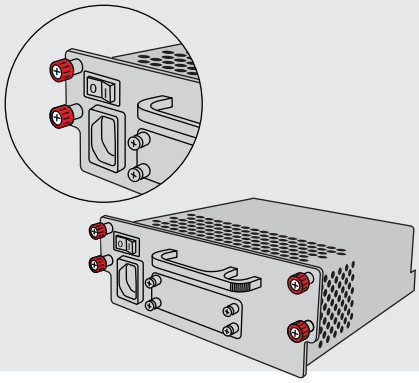

Restricted Access

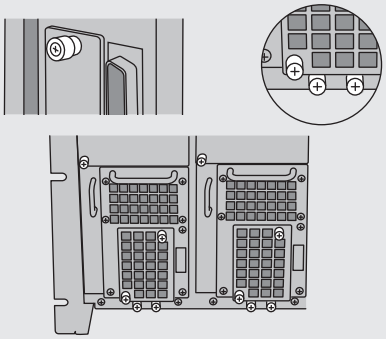

Limited Space

INSTALLATION						APPLICATION REQUIREMENTS									
Self Clinching (Press-In)	Flare-In	Floating	PCB	SMT	Snap-In	Stainless Steel	Low Profile	Flush	Hand Operable	Black Finish	Color Coded Knob	Restricted Access UL-1950	ATCA Compliant	High Strength Screw	Fixed Spring Preload
✔	✔	✔	✔	✔	✔				✔	✔		Smooth knob ✔	Page 558 ✔	✔	
✔	✔	✔	✔	✔					✔	Knob only as standard	✔	Smooth knob ✔	Page 558 ✔	✔	
✔	✔	✔							✔	✔		✔		✔	
✔	✔			✔			✔		✔			Smooth knob ✔		✔	
	✔													✔	✔
✔						✔		✔							
✔									✔	✔					

Dimensions in millimeters (inch) unless otherwise stated

Captive Screws Specification

Metric/Unified threaded fasteners selection guide

How to specify *SOUTHCO*® Captive Screws

1. **Choose the product type that best suits your application using the product benefits table.**
2. **Select your product features: Recess, installation style, color, size.**
3. **Specify the final part numbers using the tables found with each product style.**
4. **You can also specify your *SOUTHCO*® hardware on the web. Simply enter your product type into the search engine and configure online.**

SOUTHCO® Captive Screws are available in a variety of sizes and configurations to give you endless options to control or enable access in your applications. Specifying *SOUTHCO*® Captive Screws is easy. Just follow the instructions below or go to www.southco.com.

Product benefits table: Determine the product that best fits your application requirements. Additional information is available in the selection table on page 512-513.

47	• Stylized designer knob • Installation for a wide variety of material configurations • Knurled knob for easy, hand operation • Custom powder coat color matching		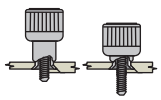
4C	• Define access points with color • Color match to your industrial design		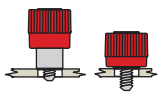
47	• Restrict access to service areas with tighten by hand, tool to release options • Meets service access standards		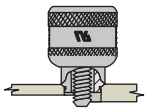
52	• Lower profile knob for tight spaces • High strength screw for fast assembly		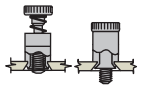
5T	• Maximize heat transfer • Screw sets defined preload • Maintain contact under vibration • Allows for thermal expansion while maintaining preload to defined range		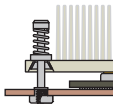
F5	• Flush recessed captive design • Tool only access • All stainless steel design		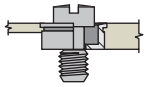
N7	• Fastens to thread stud for a flush panel configuration • Available with blind threaded hole for a finished appearance		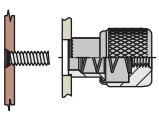

Dimensions in millimeters (inch) unless otherwise stated

Select the product features that you need

Tool Recess

Which access is best for your application?				
Slotted: Common recess	**Phillips:** Better tool retention Meets certain limited-access restrictions	**Phillips / Slot:** Combine the better tool retention of Phillips with the convenience of a slotted recess	***TORX®*:** Higher torque transfer Reduced cam-out and end load High speed assembly Longer tool life	***TORX®* / Slot:** Combine the benefits of *TORX®* with the convenience of a slotted recess
				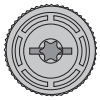

Installation Style

Which installation method is best for your application?					
Self-Clinching, Press-In: One-step press operation	**Flare-In:** Near edge installation in plastics, castings and any material	**Floating:** Provides additional radial float to accommodate a significant amount of misalignment	**P.C. Board:** Designed for use in P.C. boards and other composites such as fiberglass	**Snap-In:** Install by hand, no special tools required	**SMT:** For installation to PC Board material utilizing surface mount technology
	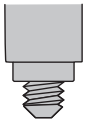	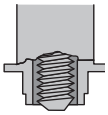	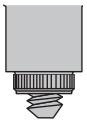	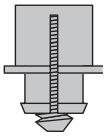	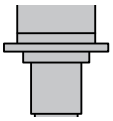

Color

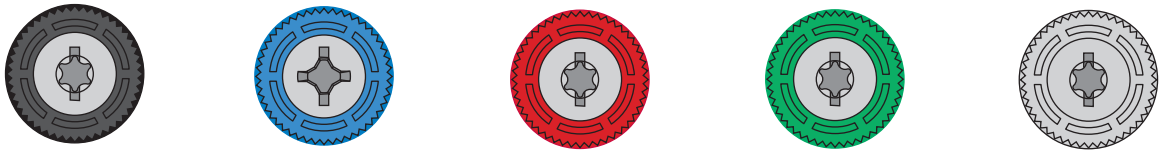

When an off-the-shelf design doesn't quite meet your needs….

Lower profile, ergonomic, extended reach, small space envelope…no problem!

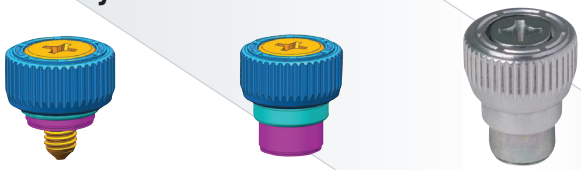

Speed up service and decrease assembly time in tight spaces!

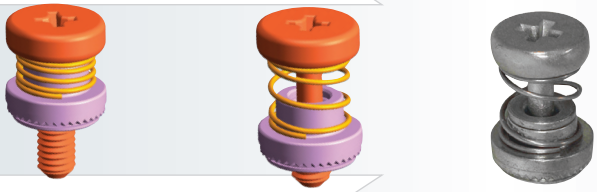

Have a wish list?
Southco can give you the solution.

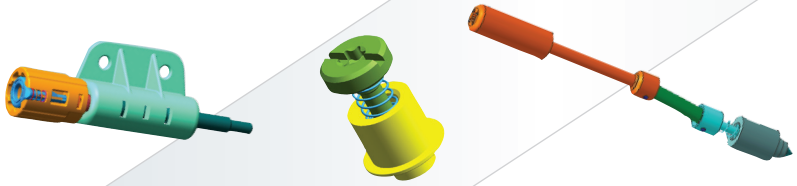

southco®

TORX® is a registered trademark of *CAMCAR* Innovations

Dimensions in millimeters (inch) unless otherwise stated

47 Captive Screws

Styled knob series · M3 thread size

- **Smooth knob meets UL-1950**
- **Designed for hand operation**
- **Spring ejected**
- **Wide variety of sizes, recesses and installation options**

Material and Finish

Ferrule:
Press-in: Hardened carbon steel, zinc plated, chromate, plus sealer
Flare-in and Floating:
Aluminum, natural
P.C. board style: 300 Series stainless steel, passivated

Knob:
Aluminum, natural or black powder coated

Screw: Hardened carbon steel, zinc plated, chromate, plus sealer

Installation Notes

See pages 546-547, 627

Notes

To ensure you receive *SOUTHCO*® quality parts, look for the segmented circle

Recess Styles

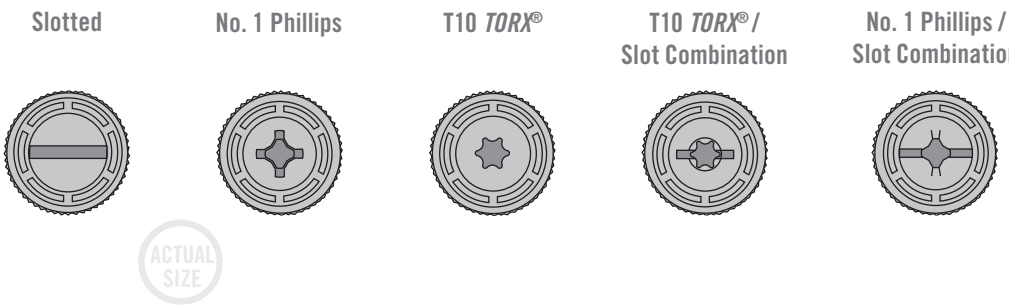

Knob Height and Screw Projection

(Flare-in style shown)

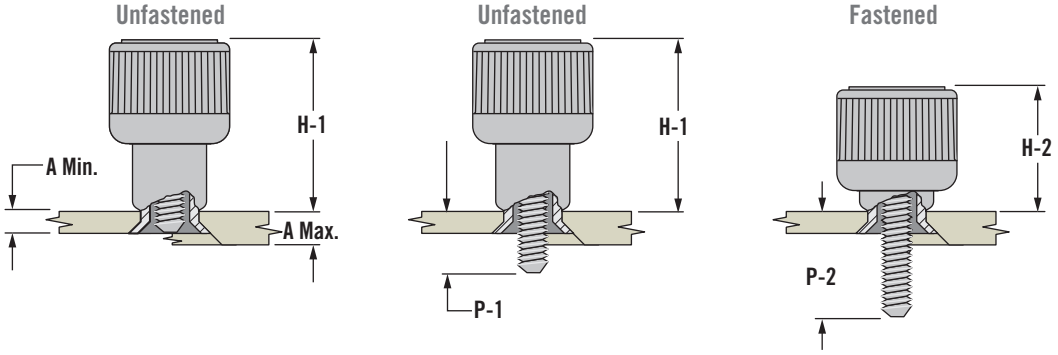

Installation Styles

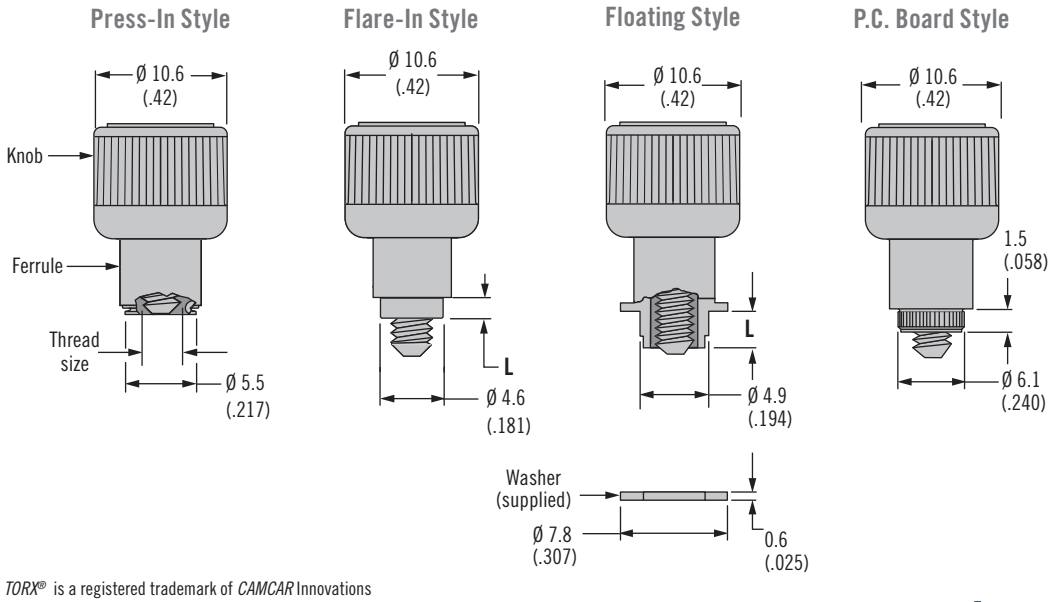

TORX® is a registered trademark of *CAMCAR* Innovations

Dimensions in millimeters (inch) unless otherwise stated

Installation Style	Knob Height		Outer Panel Dimensions		B	Total Float	Flange Length L	Screw Projection Beyond Outer Surface of Panel		Part Number				
	H-1	H-2	A Min.	A Max.				P-1	P-2	Slotted Recess	Phillips Recess	*TORX*® Recess	*TORX*® / Slot Combination	Phillips / Slot Combination
Press-In Style	11.3 (.45)	8.3 (.33)	0.9 (.036)	~	~	0.7 (.03)	~	0.8 (.03)	3.8 (.15)	47-90-101-24	47-90-121-24	47-90-141-24	47-90-161-20	47-90-181-24
								2.5 (.10)	5.5 (.22)	47-91-101-24	47-91-121-24	47-91-141-24	47-91-161-20	47-91-181-24
								4 (.16)	7 (.28)	47-92-101-24	47-92-121-24	47-92-141-24	47-92-161-20	47-92-181-24
								5.6 (.22)	8.6 (.34)	47-93-101-24	47-93-121-24	47-93-141-24	47-93-161-20	47-93-181-24
P.C. Board Style	11.5 (.45)	8.3 (.33)	1.6 (.061)	~	~	0.7 (.03)	~	1.5 (.06)	4.5 (.18)	47-95-101-34	47-95-121-34	47-95-141-34	47-95-161-30	47-95-181-34
Flare-In Style	11.5 (.45)	8.1 (.32)	0.8 (.031)	1.5 (.058)	0.4 (.015)	0.7 (.03)	1.0 (.041)	0.8 (.03)	4 (.16)	47-80-101-14	47-80-121-14	47-80-141-14	47-80-161-10	47-80-181-14
			1.5 (.059)	2.5 (.098)	0.4 (.015)		1.8 (.070)	1.5 (.06)	4.7 (.19)	47-80-102-14	47-80-122-14	47-80-142-14	47-80-162-10	47-80-182-14
			2.5 (.098)	4 (.156)	0.8 (.031)		2.6 (.104)	2.5 (.10)	5.7 (.22)	47-80-103-14	47-80-123-14	47-80-143-14	47-80-163-10	47-80-183-14
			4 (.157)	5.6 (.219)	2.4 (.093)		4.2 (.166)	4 (.16)	7.2 (.28)	47-80-105-14	47-80-125-14	47-80-145-14	47-80-165-10	47-80-185-14
			5.6 (.220)	7.1 (.281)	4 (.156)		5.8 (.299)	5.6 (.22)	8.8 (.35)	47-80-107-14	47-80-127-14	47-80-147-14	47-80-167-10	47-80-187-14
			0.8 (.031)	1.5 (.058)	0.4 (.015)		1.0 (.041)	2.5 (.10)	5.7 (.22)	47-81-101-14	47-81-121-14	47-81-141-14	47-81-161-10	47-81-181-14
								4 (.16)	7.2 (.28)	47-82-101-14	47-82-121-14	47-82-141-14	47-82-161-10	47-82-181-14
								5.6 (.22)	8.8 (.35)	47-83-101-14	47-83-121-14	47-83-141-14	47-83-161-10	47-83-181-14
			1.5 (.058)	2.5 (.098)	0.4 (.015)		1.8 (.070)	3.2 (.13)	6.4 (.25)	47-81-102-14	47-81-122-14	47-81-142-14	47-81-162-10	47-81-182-14
								4.7 (.19)	7.9 (.31)	47-82-102-14	47-82-122-14	47-82-142-14	47-82-162-10	47-82-182-14
								6.3 (.25)	9.5 (.37)	47-83-102-14	47-83-122-14	47-83-142-14	47-83-162-10	47-83-182-14
Floating Style	11.4 (.45)	8.6 (.34)	~	0.8 (.031)	2 (.080)	2.0 (.08)	2.6 (.101)	1.9 (.07)	5.1 (.20)	47-80-110-14	47-80-130-14	47-80-150-14	47-80-170-10	47-80-190-14
								3.4 (.13)	6.6 (.26)	47-81-110-14	47-81-130-14	47-81-150-14	47-81-170-10	47-81-190-14
								5 (.19)	8.2 (.32)	47-82-110-14	47-82-130-14	47-82-150-14	47-82-170-10	47-82-190-14
			0.8 (.031)	1.6 (.063)	2.8 (.111)		3.4 (.132)	1.9 (.07)	5.1 (.20)	47-80-111-14	47-80-131-14	47-80-151-14	47-80-171-10	47-80-191-14
								3.4 (.13)	6.6 (.26)	47-81-111-14	47-81-131-14	47-81-151-14	47-81-171-10	47-81-191-14
								5 (.19)	8.2 (.32)	47-82-111-14	47-82-131-14	47-82-151-14	47-82-171-10	47-82-191-14
			1.6 (.063)	2.4 (.094)	3.6 (.143)		4.2 (.164)	3.4 (.13)	6.6 (.26)	47-80-112-14	47-80-132-14	47-80-152-14	47-80-172-10	47-80-192-14
								5 (.19)	8.2 (.32)	47-81-112-14	47-81-132-14	47-81-152-14	47-81-172-10	47-81-192-14

Part numbers in shaded rows (shown in table) are fully retracting in minimum panel thickness

To add a black powder coated finish, change the part number from the table as shown:

Change 1 to 5: 47-80-102-**1**4
47-80-102-**5**4

Change 2 to 6: 47-80-102-**2**4
47-80-102-**6**4

Change 3 to 7: 47-80-102-**3**4
47-80-102-**7**4

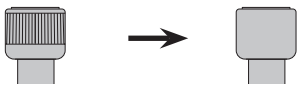

For a smooth knob, change the part number from the table as shown:

Change 0 to 1: 47-90-161-2**0**
47-90-161-2**1**

Change 4 to 5: 47-90-101-2**4**
47-90-101-2**5**

Part Number

See table

All screw part numbers shown in table are for a natural knob finish and a knurled knob

For black finish and smooth knob options, minimums may apply

TORX® is a registered trademark of *CAMCAR* Innovations

Dimensions in millimeters (inch) unless otherwise stated

47 Captive Screws

Styled knob series · M3.5 thread size

- **Smooth knob meets UL-1950**
- **Designed for hand operation**
- **Spring ejected**
- **Wide variety of sizes, recesses and installation options**

Material and Finish

Ferrule:
Press-in: Hardened carbon steel, zinc plate, chromate, plus sealer
P.C. board: 300 Series stainless steel, passivated
Flare-in, floating and snap-in: Aluminum, natural

Knob: Aluminum, natural or black powder coated

Screw: Hardened carbon steel, zinc plated, chromate, plus sealer

Installation Notes

See pages 546-547, 627

Notes

To ensure you receive *SOUTHCO*® quality parts, look for the segmented circle

Recess Styles

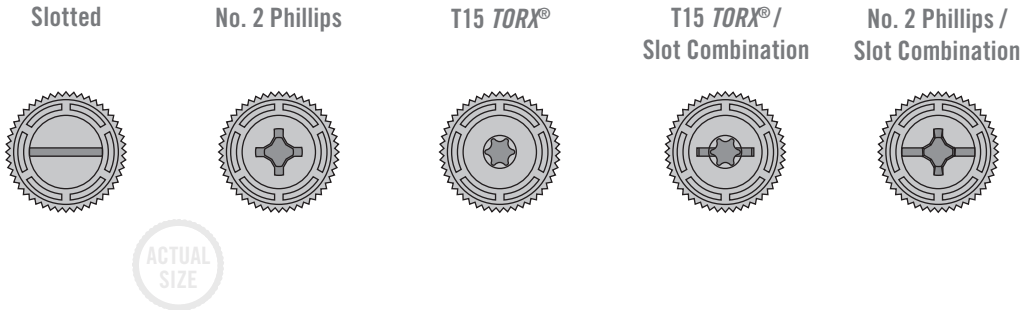

Knob Height and Screw Projection

(Flare-in style shown)

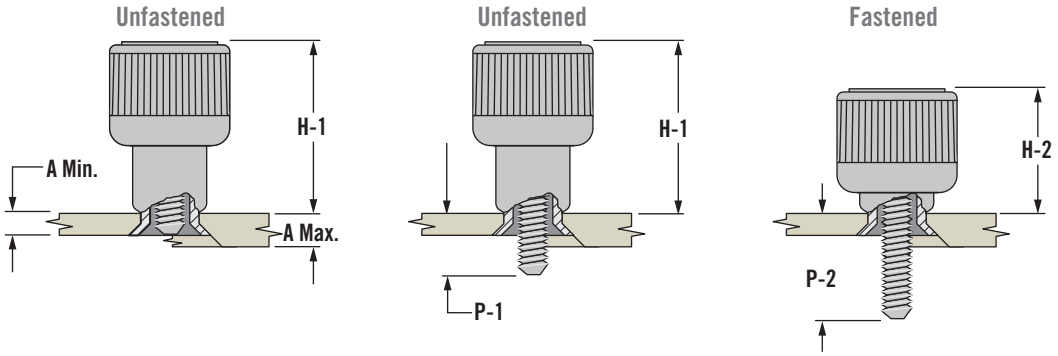

Installation Styles

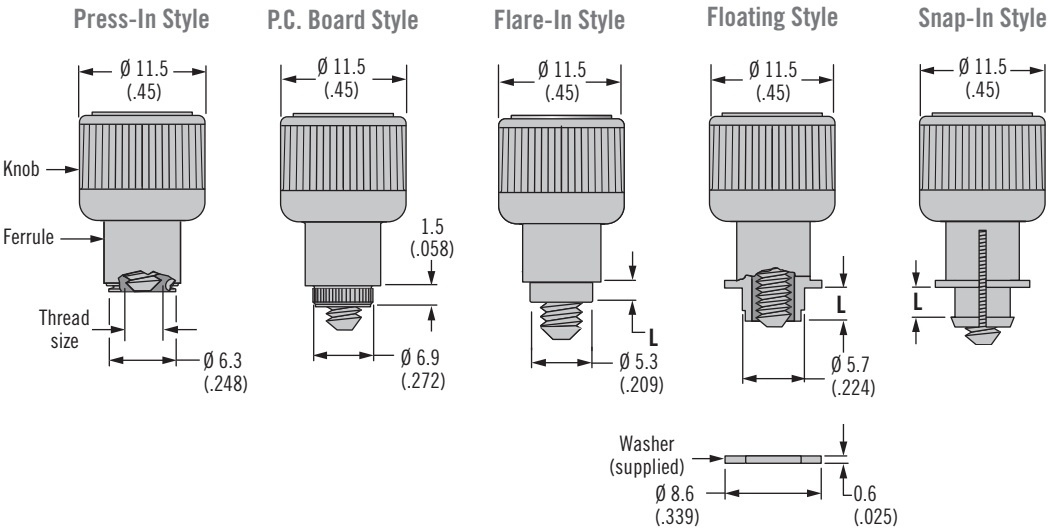

TORX® is a registered trademark of *CAMCAR* Innovations

Dimensions in millimeters (inch) unless otherwise stated

Installation Style	Knob Height		Outer Panel Dimensions		B	Total Float	Flange Length L	Screw Projection Beyond Outer Surface of Panel		Part Number				
	H-1	H-2	A Min.	A Max.				P-1	P-2	Slotted Recess	Phillips Recess	*TORX*® Recess	*TORX*® / Slot Combination	Phillips / Slot Combination
Press-In Style	15.9 (.63)	11.2 (.44)	0.9 (.036)	~	~	0.8 (.03)	~	0.5 (.02)	5.3 (.21)	47-90-201-24	47-90-221-24	47-90-241-24	47-90-261-20	47-90-281-24
								2.1 (.09)	6.9 (.27)	47-91-201-24	47-91-221-24	47-91-241-24	47-91-261-20	47-91-281-24
								3.7 (.15)	8.5 (.33)	47-92-201-24	47-92-221-24	47-92-241-24	47-92-261-20	47-92-281-24
								5.3 (.21)	10.1 (.40)	47-93-201-24	47-93-221-24	47-93-241-24	47-93-261-20	47-93-281-24
P.C. Board Style	14.8 (.58)	10 (.39)	1.6 (.061)	~	~	0.8 (.03)	~	1.4 (.06)	6.2 (.24)	47-95-201-34	47-95-221-34	47-95-241-34	47-95-261-30	47-95-281-34
Flare-In Style	15.3 (.60)	10.4 (.41)	1.5 (.058)	3.2 (.125)	0.4 (.015)	0.8 (.03)	1.8 (.07)	1.1 (.04)	6 (.24)	47-80-202-14	47-80-222-14	47-80-242-14	47-80-262-10	47-80-282-14
			3.2 (.126)	4.8 (.189)	1.6 (.062)		3.4 (.135)	2.7 (.11)	7.6 (.30)	47-80-204-14	47-80-224-14	47-80-244-14	47-80-264-10	47-80-284-14
			4.8(.188)	6.4 (.250)	3.2 (.125)		5 (.197)	4.3 (.17)	9.2 (.36)	47-80-206-14	47-80-226-14	47-80-246-14	47-80-266-10	47-80-286-14
			6.4 (.252)	7.9 (.312)	4.8 (.189)		6.6 (.26)	5.9 (.23)	10.8 (.43)	47-80-208-14	47-80-228-14	47-80-248-14	47-80-268-10	47-80-288-14
			1.5 (.058)	3.2 (.125)	0.4 (.015)		1.8 (.07)	2.7 (.11)	7.6 (.30)	47-81-202-14	47-81-222-14	47-81-242-14	47-81-262-10	47-81-282-14
								4.3 (.17)	9.2 (.36)	47-82-202-14	47-82-222-14	47-82-242-14	47-82-262-10	47-82-282-14
								5.9 (.23)	10.8 (.43)	47-83-202-14	47-83-222-14	47-83-242-14	47-83-262-10	47-83-282-14
			3.2 (.126)	4.8 (.189)	1.6 (.062)		3.4 (.135)	4.3 (.17)	9.2 (.36)	47-81-204-14	47-81-224-14	47-81-244-14	47-81-264-10	47-81-284-14
								5.9 (.23)	10.8 (.43)	47-82-204-14	47-82-224-14	47-82-244-14	47-82-264-10	47-82-284-14
			4.8 (.189)	6.4 (.250)	3.2 (.125)		5 (.197)	5.9 (.23)	10.8 (.43)	47-81-206-14	47-81-226-14	47-81-246-14	47-81-266-10	47-81-286-14
Floating Style	15.4 (.60)	10.6 (.42)	~	0.8 (.031)	2.1 (.083)	2.2 (.09)	2.9 (.113)	2.4 (.09)	7.2 (.28)	47-80-210-14	47-80-230-14	47-80-250-14	47-80-270-10	47-80-290-14
								4 (.16)	8.8 (.35)	47-81-210-14	47-81-230-14	47-81-250-14	47-81-270-10	47-81-290-14
								5.6 (.22)	10.4 (.41)	47-82-210-14	47-82-230-14	47-82-250-14	47-82-270-10	47-82-290-14
			0.8 (.031)	1.6 (.063)	2.9 (.114)		3.7 (.144)	2.4 (.09)	7.2 (.28)	47-80-211-14	47-80-231-14	47-80-251-14	47-80-271-10	47-80-291-14
								4 (.16)	8.8 (.35)	47-81-211-14	47-81-231-14	47-81-251-14	47-81-271-10	47-81-291-14
								5.6 (.22)	10.4 (.41)	47-82-211-14	47-82-231-14	47-82-251-14	47-82-271-10	47-82-291-14
			1.6 (.063)	2.4 (.094)	3.7 (.146)		4.5 (.176)	4 (.16)	8.8 (.35)	47-80-212-14	47-80-232-14	47-80-252-14	47-80-272-10	47-80-292-14
								5.6 (.22)	10.4 (.41)	47-81-212-14	47-81-232-14	47-81-252-14	47-81-272-10	47-81-292-14
Snap-In Style	15.4 (.60)	10.6 (.42)	0.5 (.02)	1 (.039)	2 (.079)	0.8 (.03)	1.1 (.044)	0.8 (.03)	5.6 (.22)	47-90-210-14	47-90-230-14	47-90-250-14	47-90-270-10	47-90-290-14
								2.4 (.09)	7.2 (.28)	47-91-210-14	47-91-230-14	47-91-250-14	47-91-270-10	47-91-290-14
								4 (.16)	8.8 (.35)	47-92-210-14	47-92-230-14	47-92-250-14	47-92-270-10	47-92-290-14
								5.6 (.22)	10.4 (.41)	47-93-210-14	47-93-230-14	47-93-250-14	47-93-270-10	47-93-290-14
			1 (.039)	1.6 (.063)	2.6 (.103)		1.7 (.067)	2.4 (.09)	7.2 (.28)	47-90-212-14	47-90-232-14	47-90-252-14	47-90-272-10	47-90-292-14
								4 (.16)	8.8 (.35)	47-91-212-14	47-91-232-14	47-91-252-14	47-91-272-10	47-91-292-14
								5.6 (.22)	10.4 (.41)	47-92-212-14	47-92-232-14	47-92-252-14	47-92-272-10	47-92-292-14

Part numbers in shaded rows (shown in table) are fully retracting in minimum panel thickness

To add a black powder coated finish, change the part number from the table as shown:

Change 1 to 5: 47-80-102-**1**4
47-80-102-**5**4

Change 2 to 6: 47-80-102-**2**4
47-80-102-**6**4

Change 3 to 7: 47-80-102-**3**4
47-80-102-**7**4

For a smooth knob, change the part number from the table as shown:

Change 0 to 1: 47-90-161-2**0**
47-90-161-2**1**

Change 4 to 5: 47-90-101-2**4**
47-90-101-2**5**

Part Number

See table

All screw part numbers shown in table are for a natural knob finish and a knurled knob

For black finish and smooth knob options, minimums may apply

TORX® is a registered trademark of *CAMCAR* Innovations

Dimensions in millimeters (inch) unless otherwise stated

47 Captive Screws

Styled knob series · M4 thread size

- **Designed for hand operation**
- **Spring ejected**
- **Wide variety of sizes, recesses and installation options**

Material and Finish

Ferrule:
Press-in: Hardened carbon steel, zinc plate, chromate, plus sealer
Flare-in, floating and snap-in: Aluminum, natural

Knob: Aluminum, natural or black powder coated

Screw: Hardened carbon steel, zinc plated, chromate, plus sealer

Installation Notes

See pages 546-547, 627

Notes

To ensure you receive *SOUTHCO*® quality parts, look for the segmented circle

Recess Styles

Knob Height and Screw Projection

(Flare-in style shown)

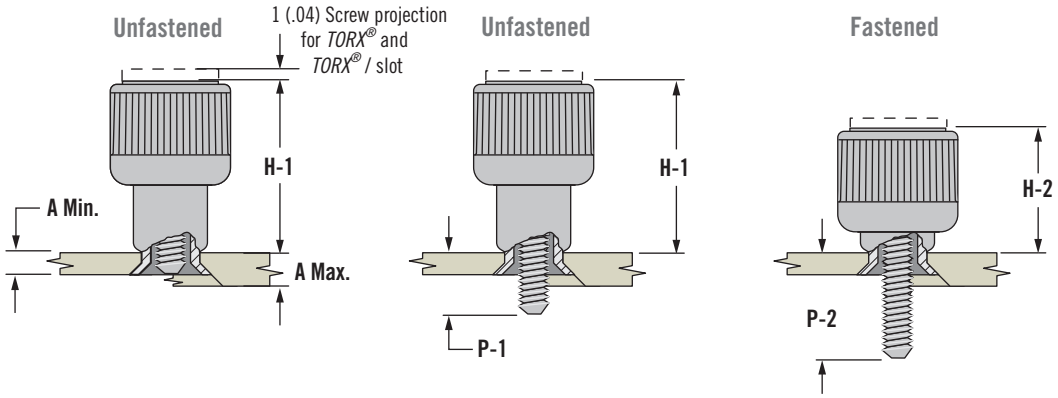

Installation Styles

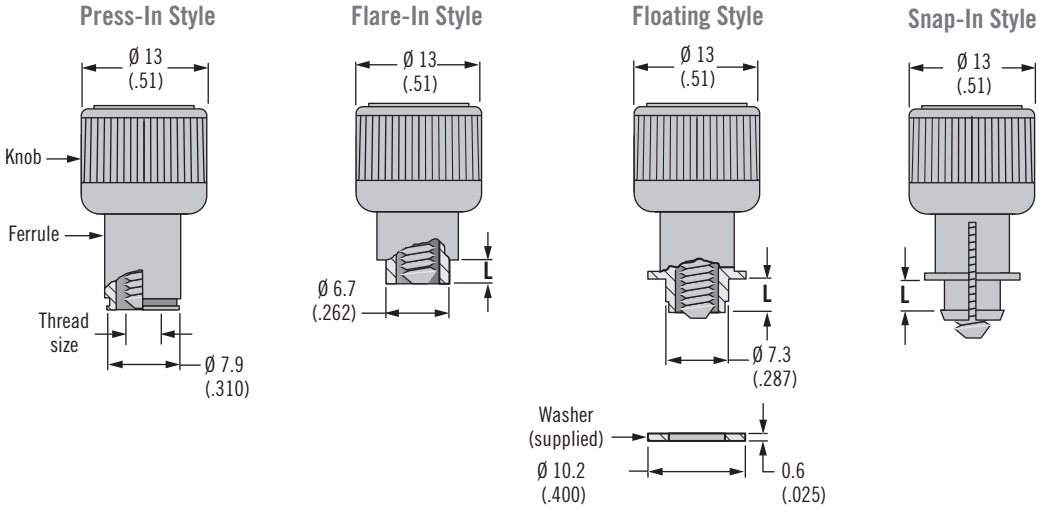

TORX® is a registered trademark of *CAMCAR* Innovations

Dimensions in millimeters (inch) unless otherwise stated

Installation Style	Knob Height		Outer Panel Dimensions		B	Total Float	Flange Length L	Screw Projection Beyond Outer Surface of Panel		Part Number				
	H-1	H-2	A Min.	A Max.				P-1	P-2	Slotted Recess	Phillips Recess	*TORX*® Recess	*TORX*® / Slot Combination	Phillips / Slot Combination
Press-In Style	16.2 (.64)	11.3 (.45)	0.9 (.036)	~	~	0.8 (.03)	~	0.6 (.02)	5.6 (.22)	47-90-301-24	47-90-321-24	47-90-341-20	47-90-361-20	47-90-381-20
								2.2 (.09)	7.2 (.28)	47-91-301-24	47-91-321-24	47-91-341-20	47-91-361-20	47-91-381-20
								3.8 (.15)	8.7 (.34)	47-92-301-24	47-92-321-24	47-92-341-20	47-92-361-20	47-92-381-20
								5.4 (.21)	10.3 (.41)	47-93-301-24	47-93-321-24	47-93-341-20	47-93-361-20	47-93-381-20
Flare-In Style	15.6 (.61)	10.5 (.41)	1.5 (.058)	3.2 (.125)	0.4 (.015)	0.9 (.03)	1.8 (.070)	1.2 (.05)	6.3 (.25)	47-80-302-14	47-80-322-14	47-80-342-10	47-80-362-10	47-80-382-10
			3.2 (.126)	4.8 (.189)	1.6 (.062)		3.4 (.135)	2.8 (.11)	7.9 (.31)	47-80-304-14	47-80-324-14	47-80-344-10	47-80-364-10	47-80-384-10
			4.8 (.189)	6.4 (.251)	3.2 (.125)		5 (.197)	4.4 (.17)	9.5 (.37)	47-80-306-14	47-80-326-14	47-80-346-10	47-80-366-10	47-80-386-10
			6.4 (.251)	7.9 (.312)	4.8 (.187)		6.6 (.26)	6 (.24)	11.1 (.44)	47-80-308-14	47-80-328-14	47-80-348-10	47-80-368-10	47-80-388-10
			1.5 (.058)	3.2 (.125)	0.4 (.015)		1.8 (.07)	2.8 (.11)	7.9 (.31)	47-81-302-14	47-81-322-14	47-81-342-10	47-81-362-10	47-81-382-10
								4.4 (.17)	9.5 (.37)	47-82-302-14	47-82-322-14	47-82-342-10	47-82-362-10	47-82-382-10
								6 (.24)	11.1 (.44)	47-83-302-14	47-83-322-14	47-83-342-10	47-83-362-10	47-83-382-10
			3.2 (.126)	4.8 (.189)	1.6 (.062)		3.4 (.135)	4.4 (.17)	9.5 (.37)	47-81-304-14	47-81-324-14	47-81-344-10	47-81-364-10	47-81-384-10
								6 (.24)	11.1 (.44)	47-82-304-14	47-82-324-14	47-82-344-10	47-82-364-10	47-82-384-10
			4.8 (.189)	6.4 (.250)	3.2 (.125)		5 (.197)	6 (.24)	11.1 (.44)	47-81-306-14	47-81-326-14	47-81-346-10	47-81-366-10	47-81-386-10
Floating Style	16.2 (.64)	11.2 (.44)	~	0.8 (.031)	2.3 (.09)	2.3 (.09)	3.2 (.127)	2.4 (.09)	7.2 (.28)	47-80-310-14	47-80-330-14	47-80-350-10	47-80-370-10	47-80-390-10
								4 (.16)	8.8 (.35)	47-81-310-14	47-81-330-14	47-81-350-10	47-81-370-10	47-81-390-10
								5.6 (.22)	10.4 (.41)	47-82-310-14	47-82-330-14	47-82-350-10	47-82-370-10	47-82-390-10
			0.8 (.031)	1.6 (.063)	3.1 (.121)		4 (.158)	2.4 (.09)	7.2 (.28)	47-80-311-14	47-80-331-14	47-80-351-10	47-80-371-10	47-80-391-10
								4 (.16)	8.8 (.35)	47-81-311-14	47-81-331-14	47-81-351-10	47-81-371-10	47-81-391-10
								5.6 (.22)	10.4 (.41)	47-82-311-14	47-82-331-14	47-82-351-10	47-82-371-10	47-82-391-10
			1.6 (.063)	2.4 (.094)	3.9 (.153)		4.8 (.190)	4 (.16)	7.2 (.28)	47-80-312-14	47-80-332-14	47-80-352-10	47-80-372-10	47-80-392-10
								5.6 (.22)	8.8 (.35)	47-81-312-14	47-81-332-14	47-81-352-10	47-81-372-10	47-81-392-10
Snap-In Style	15.7 (.62)	11.2 (.44)	0.5 (.02)	1 (.039)	2 (.079)	0.9 (.03)	1.1 (.044)	1.1 (.04)	5.6 (.22)	47-90-310-14	47-90-330-14	47-90-350-10	47-90-370-10	47-90-390-10
								2.7 (.11)	7.2 (.28)	47-91-310-14	47-91-330-14	47-91-350-10	47-91-370-10	47-91-390-10
								4.3 (.17)	8.8 (.35)	47-92-310-14	47-92-330-14	47-92-350-10	47-92-370-10	47-92-390-10
								5.8 (.23)	10.4 (.41)	47-93-310-14	47-93-330-14	47-93-350-10	47-93-370-10	47-93-390-10
			1 (.039)	1.6 (.063)	2.6 (.102)		1.7 (.068)	2.7 (.11)	7.2 (.28)	47-90-312-14	47-90-332-14	47-90-352-10	47-90-372-10	47-90-392-10
								4.3 (.17)	8.8 (.35)	47-91-312-14	47-91-332-14	47-91-352-10	47-91-372-10	47-91-392-10
								5.9 (.23)	10.4 (.41)	47-92-312-14	47-92-332-14	47-92-352-10	47-92-372-10	47-92-392-10
			1.6 (.063)	2.5 (.098)	3.5 (.138)		2.6 (.103)	2.7 (.11)	7.2 (.28)	47-90-314-14	47-90-334-14	47-90-354-10	47-90-374-10	47-90-394-10
								4.3 (.17)	8.8 (.35)	47-91-314-14	47-91-334-14	47-91-354-10	47-91-374-10	47-91-394-10
								5.9 (.23)	10.4 (.41)	47-92-314-14	47-92-334-14	47-92-354-10	47-92-374-10	47-92-394-10

Part numbers in shaded rows (shown in table) are fully retracting in minimum panel thickness

To add a black powder coated finish, change the part number from the table as shown:

Change 1 to 5: 47-80-102-**1**4
47-80-102-**5**4

Change 2 to 6: 47-80-102-**2**4
47-80-102-**6**4

For a smooth knob, change the part number from the table as shown:

Change 0 to 1: 47-90-161-2**0**
47-90-161-2**1**

Change 4 to 5: 47-90-101-2**4**
47-90-101-2**5**

Part Number

See table

All screw part numbers shown in table are for a natural knob finish and a knurled knob

For black finish and smooth knob options, minimums may apply

TORX® is a registered trademark of *CAMCAR* Innovations

Dimensions in millimeters (inch) unless otherwise stated

47 Captive Screws

Styled knob series · M5 thread size

- **Designed for hand operation**
- **Spring ejected**
- **Wide variety of sizes, recesses and installation options**

Material and Finish

Ferrule:
Press-in: Hardened carbon steel, zinc plate, chromate, plus sealer
Flare-in, floating and snap-in: Aluminum, natural

Knob: Aluminum, natural or black powder coated

Screw: Hardened carbon steel, zinc plated, chromate, plus sealer

Installation Notes

See pages 546-547, 627

Notes

To ensure you receive *SOUTHCO*® quality parts, look for the segmented circle

Recess Styles

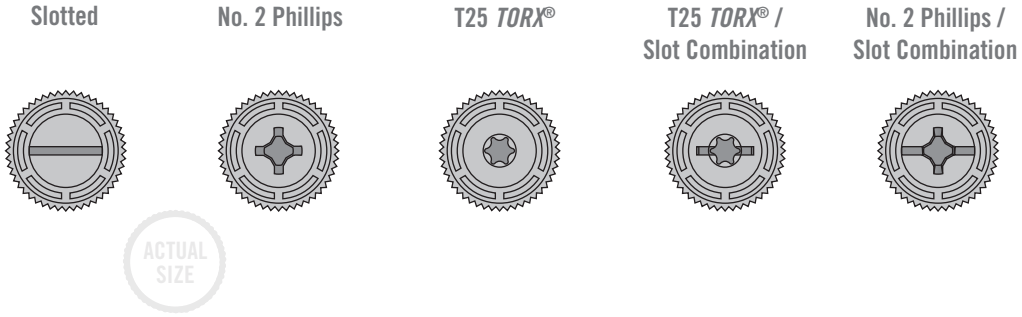

Knob Height and Screw Projection

(Flare-in style shown)

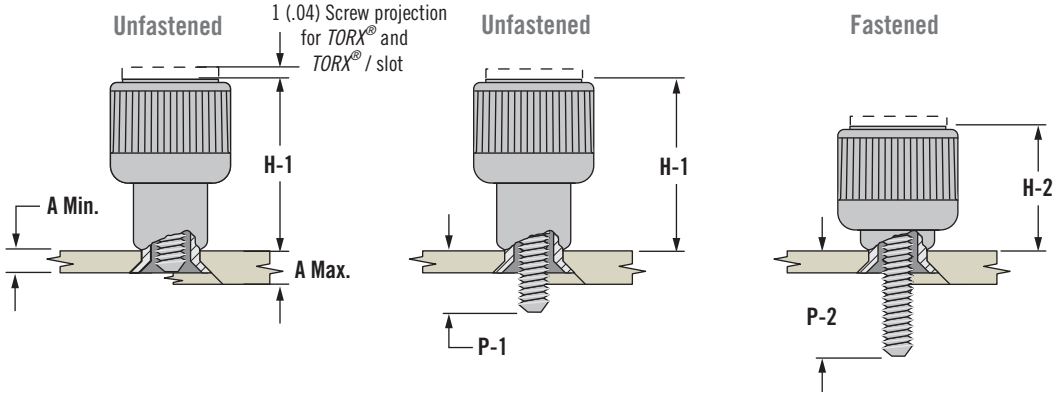

Installation Styles

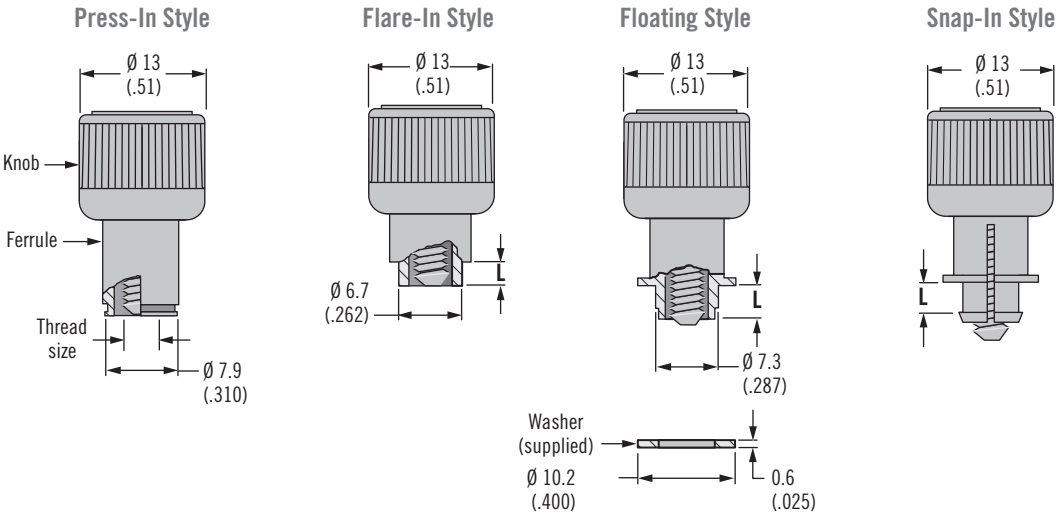

TORX® is a registered trademark of *CAMCAR* Innovations

Dimensions in millimeters (inch) unless otherwise stated

Installation Style	Knob Height		Outer Panel Dimensions			Total Float	Flange Length L	Screw Projection Beyond Outer Surface of Panel		Part Number				
	H-1	H-2	A Min.	A Max.	B			P-1	P-2	Slotted Recess	Phillips Recess	*TORX*® Recess	*TORX*® / Slot Combination	Phillips / Slot Combination
Press-In Style	16.2 (.64)	11.3 (.45)	0.9 (.036)	~	~	0.6 (.02)	~	0.6 (.024)	5.5 (.22)	47-90-501-24	47-90-521-24	47-90-541-20	47-90-561-20	47-90-581-20
								2.2 (.087)	7.1 (.28)	47-91-501-24	47-91-521-24	47-91-541-20	47-91-561-20	47-91-581-20
								3.8 (.15)	8.7 (.34)	47-92-501-24	47-92-521-24	47-92-541-20	47-92-561-20	47-92-581-20
								5.4 (.21)	10.3 (.41)	47-93-501-24	47-93-521-24	47-93-541-20	47-93-561-20	47-93-581-20
Flare-In Style	15.6 (.61)	10.5 (.41)	1.5 (.058)	3.2 (.125)	0.4 (.015)	0.6 (.02)	1.8 (.070)	1.2 (.05)	6.3 (.25)	47-80-502-14	47-80-522-14	47-80-542-10	47-80-562-10	47-80-582-10
			3.2 (.126)	4.8 (.189)	1.6 (.062)		3.4 (.135)	2.8 (.11)	7.9 (.31)	47-80-504-14	47-80-524-14	47-80-544-10	47-80-564-10	47-80-584-10
			4.8 (.189)	6.4 (.250)	3.2 (.125)		5 (.197)	4.4 (.17)	9.5 (.37)	47-80-506-14	47-80-526-14	47-80-546-10	47-80-566-10	47-80-586-10
			6.3 (.251)	7.9 (.312)	4.8 (.189)		6.6 (.260)	6 (.24)	11.1 (.44)	47-80-508-14	47-80-528-14	47-80-548-10	47-80-568-10	47-80-588-10
								2.8 (.11)	7.9 (.31)	47-81-502-14	47-81-522-14	47-81-542-10	47-81-562-10	47-81-582-10
							1.8 (.070)	4.4 (.17)	9.5 (.37)	47-82-502-14	47-82-522-14	47-82-542-10	47-82-562-10	47-82-582-10
								6 (.24)	11.1 (.44)	47-83-502-14	47-83-522-14	47-83-542-10	47-83-562-10	47-83-582-10
			3.2 (.126)	4.8 (.189)	1.6 (.062)		3.4 (.135)	4.4 (.17)	9.5 (.37)	47-81-504-14	47-81-524-14	47-81-544-10	47-81-564-10	47-81-584-10
								6 (.24)	11.1 (.44)	47-82-504-14	47-82-524-14	47-82-544-10	47-82-564-10	47-82-584-10
			4.8 (.189)	6.4 (.250)	3.2 (.125)		5 (.197)	6 (.24)	11.1 (.44)	47-81-506-14	47-81-526-14	47-81-546-10	47-81-566-10	47-81-586-10
Floating Style	16 (.63)	11.2 (.44)	~	0.8 (.031)	2.3 (.090)	2.3 (.09)	3.2 (.127)	2.4 (.09)	7.2 (.28)	47-80-510-14	47-80-530-14	47-80-550-10	47-80-570-10	47-80-590-10
								4 (.16)	8.8 (.35)	47-81-510-14	47-81-530-14	47-81-550-10	47-81-570-10	47-81-590-10
								5.6 (.22)	10.4 (.41)	47-82-510-14	47-82-530-14	47-82-550-10	47-82-570-10	47-82-590-10
			0.8 (.031)	1.6 (.063)	3.1 (.121)		4 (.158)	2.4 (.09)	7.2 (.28)	47-80-511-14	47-80-531-14	47-80-551-10	47-80-571-10	47-80-591-10
								4 (.16)	8.8 (.35)	47-81-511-14	47-81-531-14	47-81-551-10	47-81-571-10	47-81-591-10
								5.6 (.22)	10.4 (.41)	47-82-511-14	47-82-531-14	47-82-551-10	47-82-571-10	47-82-591-10
			1.6 (.063)	2.4 (.094)	3.9 (.153)		4.8 (.190)	4 (.16)	8.8 (.35)	47-80-512-14	47-80-532-14	47-80-552-10	47-80-572-10	47-80-592-10
								5.6 (.22)	10.4 (.41)	47-81-512-14	47-81-532-14	47-81-552-10	47-81-572-10	47-81-592-10
Snap-In Style	15.7 (.62)	11.2 (.44)	0.5 (.020)	1 (.039)	2 (.079)	.9 (.04)	1.1 (.044)	1.1 (.04)	5.6 (.22)	47-90-510-14	47-90-530-14	47-90-550-10	47-90-570-10	47-90-590-10
								2.7 (.11)	7.2 (.28)	47-91-510-14	47-91-530-14	47-91-550-10	47-91-570-10	47-91-590-10
								4.3 (.17)	8.8 (.35)	47-92-510-14	47-92-530-14	47-92-550-10	47-92-570-10	47-92-590-10
								5.9 (.23)	10.4 (.41)	47-93-510-14	47-93-530-14	47-93-550-10	47-93-570-10	47-93-590-10
			1 (.039)	1.6 (.063)	2.6 (.103)		1.7 (.068)	2.7 (.11)	7.2 (.28)	47-90-512-14	47-90-532-14	47-90-552-10	47-90-572-10	47-90-592-10
								4.3 (.17)	8.8 (.35)	47-91-512-14	47-91-532-14	47-91-552-10	47-91-572-10	47-91-592-10
								5.9 (.23)	10.4 (.41)	47-92-512-14	47-92-532-14	47-92-552-10	47-92-572-10	47-92-592-10
			1.6 (.063)	2.5 (.098)	3.5 (.138)		2.6 (.103)	2.7 (.11)	7.2 (.28)	47-90-514-14	47-90-534-14	47-90-554-10	47-90-574-10	47-90-594-10
								4.3 (.17)	8.8 (.35)	47-91-514-14	47-91-534-14	47-91-554-10	47-91-574-10	47-91-594-10
								5.9 (.23)	10.4 (.41)	47-92-514-14	47-92-534-14	47-92-554-10	47-92-574-10	47-92-594-10

Part numbers in shaded rows (shown in table) are fully retracting in minimum panel thickness

To add a black powder coated finish, change the part number from the table as shown:

Change 1 to 5: 47-80-102-**1**4
47-80-102-**5**4

Change 2 to 6: 47-80-102-**2**4
47-80-102-**6**4

For a smooth knob, change the part number from the table as shown:

Change 0 to 1: 47-90-161-2**0**
47-90-161-2**1**

Change 4 to 5: 47-90-101-2**4**
47-90-101-2**5**

Part Number

See table

All screw part numbers shown in table are for a natural knob finish and a knurled knob

For black finish and smooth knob options, minimums may apply

TORX® is a registered trademark of *CAMCAR* Innovations

Dimensions in millimeters (inch) unless otherwise stated

47 Captive Screws

Styled knob series · M6 thread size

- **Designed for hand operation**
- **Spring ejected**
- **Wide variety of sizes, recesses and installation options**

Material and Finish

Ferrule:
Press-in: Hardened carbon steel, zinc plate, chromate, plus sealer
Flare-in and Floating: Aluminum, natural

Knob: Aluminum, natural or black powder coated

Screw: Hardened carbon steel, zinc plated, chromate, plus sealer

Installation Notes

See pages 546-547, 627

Notes

To ensure you receive *SOUTHCO*® quality parts, look for the segmented circle

Recess Styles

Slotted | No. 2 Phillips | T30 *TORX*® | T30 *TORX*® / Slot Combination | No. 2 Phillips / Slot Combination

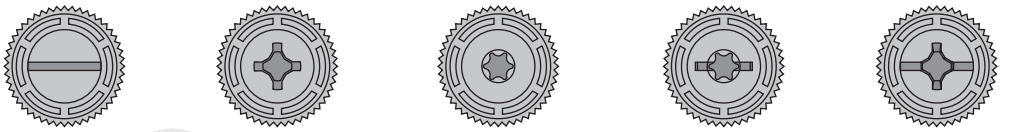

ACTUAL SIZE

Knob Height and Screw Projection

(Flare-in style shown)

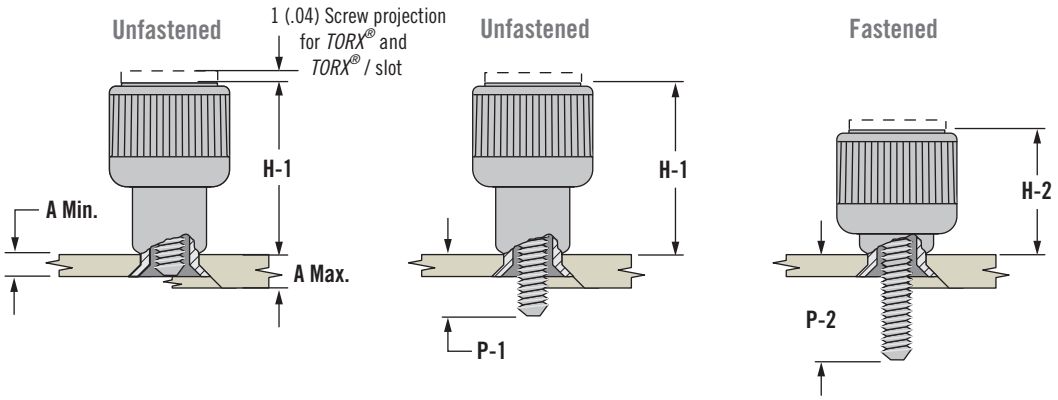

Installation Styles

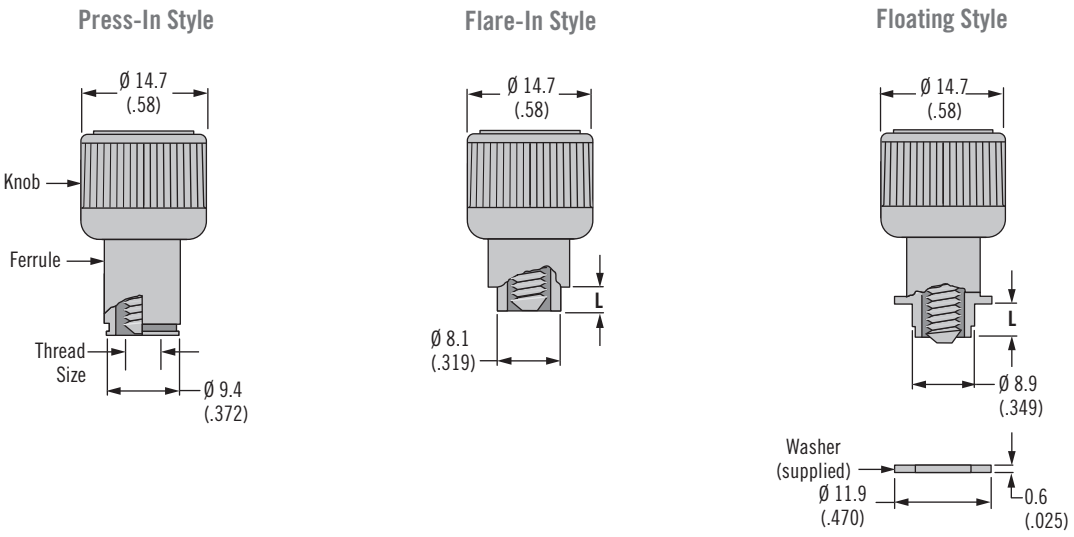

TORX® is a registered trademark of *CAMCAR* Innovations

Dimensions in millimeters (inch) unless otherwise stated

Installation Style	Knob Height		Outer Panel Dimensions		B	Total Float	Flange Length L	Screw Projection Beyond Outer Surface of Panel		Part Number				
	H-1	H-2	A Min.	A Max.				P-1	P-2	Slotted Recess	Phillips Recess	*TORX*® Recess	*TORX*® / Slot Combination	Phillips / Slot Combination
Press-In Style	20 (.79)	13.4 (.53)	0.9 (.036)	~	~	0.8 (.03)	~	0.5 (.02)	7.1 (.28)	47-90-601-24	47-90-621-24	47-90-641-20	47-90-661-20	47-90-681-20
								2.1 (.08)	8.7 (.34)	47-91-601-24	47-91-621-24	47-91-641-20	47-91-661-20	47-91-681-20
								3.7 (.15)	10.3 (.41)	47-92-601-24	47-92-621-24	47-92-641-20	47-92-661-20	47-92-681-20
								5.3 (.21)	11.9(.47)	47-93-601-24	47-93-621-24	47-93-641-20	47-93-661-20	47-93-681-20
Flare-In Style	19.3 (.76)	12.7 (.50)	1.5 (.058)	3.2 (.125)	0.4 (.015)	0.9 (.03)	1.8 (.070)	1.2 (.05)	7.8 (.31)	47-80-602-14	47-80-622-14	47-80-642-10	47-80-662-10	47-80-682-10
			3.2 (.126)	4.8 (.189)	1.6 (.062)		3.4 (.135)	2.8 (.11)	9.4 (.31)	47-80-604-14	47-80-624-14	47-80-644-10	47-80-664-10	47-80-684-10
			4.8 (.189)	6.4 (.250)	3.2 (.125)		5 (.197)	4.4 (.17)	11 (.43)	47-80-606-14	47-80-626-14	47-80-646-10	47-80-666-10	47-80-686-10
			6.4 (.251)	7.9 (.312)	4.8 (.189)		6.6 (.260)	6 (.24)	12.6 (.50)	47-80-608-14	47-80-628-14	47-80-648-10	47-80-668-10	47-80-688-10
			1.5 (.058)	3.2 (.125)	0.4 (.015)		1.8 (.070)	2.8 (.11)	9.4 (.37)	47-81-602-14	47-81-622-14	47-81-642-10	47-81-662-10	47-81-682-10
								4.4 (.17)	11 (.43)	47-82-602-14	47-82-622-14	47-82-642-10	47-82-662-10	47-82-682-10
								6 (.24)	12.6 (.50)	47-83-602-14	47-83-622-14	47-83-642-10	47-83-662-10	47-83-682-10
			3.2 (.126)	4.8 (.189)	1.6 (.062)		3.4 (.135)	4.4 (.17)	11 (.43)	47-81-604-14	47-81-624-14	47-81-644-10	47-81-664-10	47-81-684-10
								6 (.24)	12.6 (.50)	47-82-604-14	47-82-624-14	47-82-644-10	47-82-664-10	47-82-684-10
			4.8 (.189)	6.4 (.250)	3.2 (.125)		5 (.197)	6 (.24)	12.6 (.50)	47-81-606-14	47-81-626-14	47-81-646-10	47-81-666-10	47-81-686-10
Floating Style	20 (.79)	13.3 (.52)	~	0.8 (.031)	2.5 (.097)	2.3 (.09)	3.2 (.127)	2.1 (.08)	8.8 (.35)	47-80-610-14	47-80-630-14	47-80-650-10	47-80-670-10	47-80-690-10
								3.7 (.15)	10.4 (.41)	47-81-610-14	47-81-630-14	47-81-650-10	47-81-670-10	47-81-690-10
								5.3 (.21)	12 (.47)	47-82-610-14	47-82-630-14	47-82-650-10	47-82-670-10	47-82-690-10
			0.8 (.031)	1.6 (.063)	3.3 (.128)		4 (.158)	2.1 (.08)	8.8 (.35)	47-80-611-14	47-80-631-14	47-80-651-10	47-80-671-10	47-80-691-10
								3.7 (.15)	10.4 (.41)	47-81-611-14	47-81-631-14	47-81-651-10	47-81-671-10	47-81-691-10
								5.3 (.21)	12 (.47)	47-82-611-14	47-82-631-14	47-82-651-10	47-82-671-10	47-82-691-10
			1.6 (.063)	2.4 (.094)	4.1 (.160)		4.8 (.189)	3.7 (.15)	10.4 (.41)	47-80-612-14	47-80-632-14	47-80-652-10	47-80-672-10	47-80-692-10
								5.3 (.21)	12 (.47)	47-81-612-14	47-81-632-14	47-81-652-10	47-81-672-10	47-81-692-10

Part numbers in shaded rows (shown in table) are fully retracting in minimum panel thickness

To add a black powder coated finish, change the part number from the table as shown:

Change 1 to 5: 47-80-102-**1**4
47-80-102-**5**4

Change 2 to 6: 47-80-102-**2**4
47-80-102-**6**4

For a smooth knob, change the part number from the table as shown:

Change 0 to 1: 47-90-161-2**0**
47-90-161-2**1**

Change 4 to 5: 47-90-101-2**4**
47-90-101-2**5**

Part Number

See table

All screw part numbers shown in table are for a natural knob finish and a knurled knob

For black finish and smooth knob options, minimums may apply

TORX® is a registered trademark of *CAMCAR* Innovations

Dimensions in millimeters (inch) unless otherwise stated

47 Captive Screws

Styled knob series · 4-40 thread size

- **Smooth knob meets UL-1950**
- **Designed for hand operation**
- **Spring ejected**
- **Wide variety of sizes, recesses and installation options**

Material and Finish

Ferrule:
Press-in: Hardened carbon steel, zinc plate, chromate, plus sealer
P.C. board style:
300 Series stainless steel
Flare-in and Floating:
Aluminum, natural

Knob: Aluminum, natural or black powder coated

Screw: Hardened carbon steel, zinc plated, chromate, plus sealer

Installation Notes

See pages 546-547, 627

Notes

To ensure you receive *SOUTHCO*® quality parts, look for the segmented circle

Recess Styles

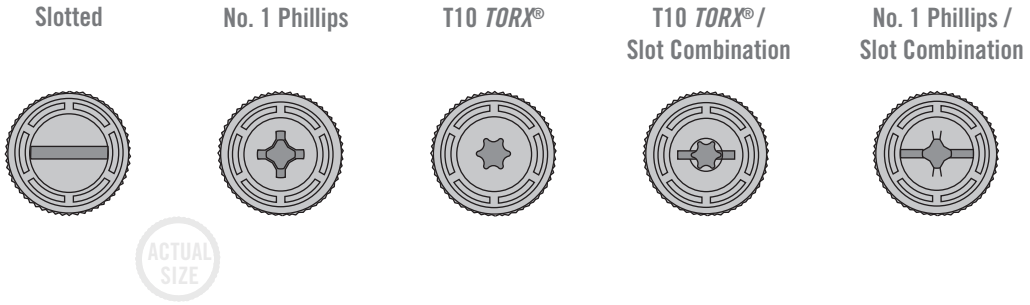

Knob Height and Screw Projection

(Flare-in style shown)

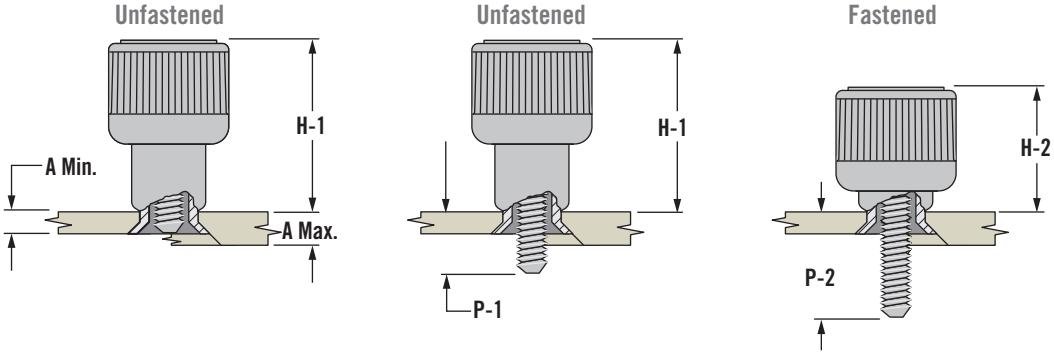

Installation Styles

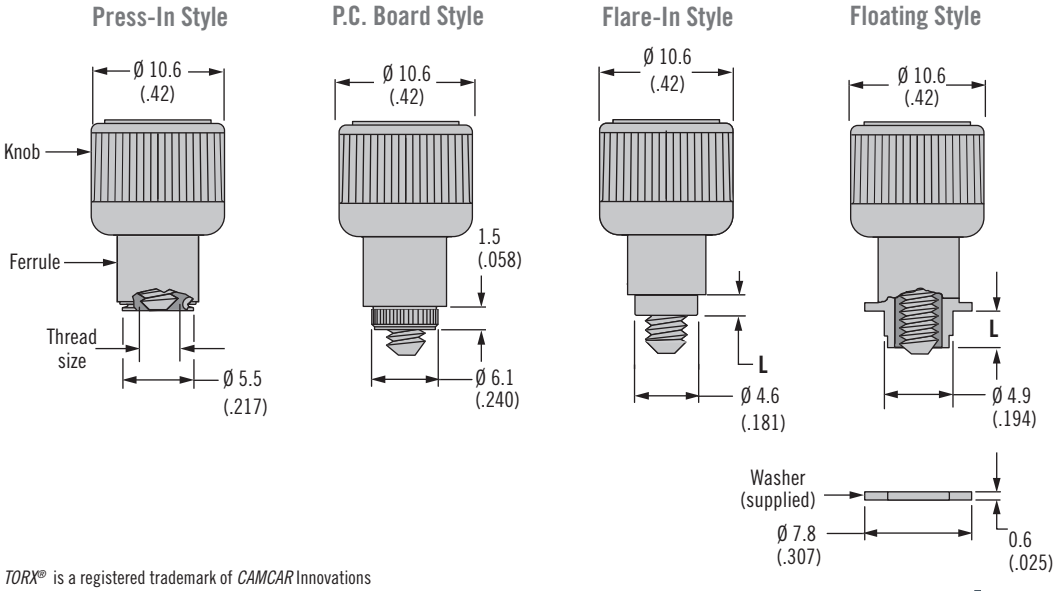

TORX® is a registered trademark of *CAMCAR* Innovations

Dimensions in millimeters (inch) unless otherwise stated

Installation Style	Knob Height		Outer Panel Dimensions		B	Total Float	Flange Length L	Screw Projection Beyond Outer Surface of Panel		Part Number				
	H-1	H-2	A Min.	A Max.				P-1	P-2	Slotted Recess	Phillips Recess	*TORX*® Recess	*TORX*® / Slot Combination	Phillips / Slot Combination
Press-In Style	11.3 (.45)	8.3 (.33)	0.9 (.036)	~	~	0.8 (.03)	~	0.8 (.03)	3.8 (.15)	47-60-101-24	47-60-121-24	47-60-141-24	47-60-161-20	47-60-181-24
								2.5 (.10)	5.5 (.22)	47-61-101-24	47-61-121-24	47-61-141-24	47-61-161-20	47-61-181-24
								4 (.16)	7 (.28)	47-62-101-24	47-62-121-24	47-62-141-24	47-62-161-20	47-62-181-24
								5.6 (.22)	8.6 (.34)	47-63-101-24	47-63-121-24	47-63-141-24	47-63-161-20	47-63-181-24
P.C. Board Style	11.5 (.45)	8.3 (.33)	1.6 (.061)	~	~	0.8 (.03)	~	1.5 (.06)	4.5 (.18)	47-65-101-34	47-65-121-34	47-65-141-34	47-65-161-30	47-65-181-34
Flare-In Style	11.5 (.45)	8.1 (.32)	0.8 (.031)	1.5 (.058)	0.4 (.015)	0.6 (.03)	1 (.041)	0.8 (.03)	4 (.16)	47-10-101-14	47-10-121-14	47-10-141-14	47-10-161-10	47-10-181-14
			1.5 (.059)	2.5 (.100)	0.4 (.015)		1.8 (.070)	1.5 (.06)	4.7 (.19)	47-10-102-14	47-10-122-14	47-10-142-14	47-10-162-10	47-10-182-14
			2.5 (.1)	4 (.156)	0.8 (.031)		2.6 (.104	2.5 (.10)	5.7 (.22)	47-10-103-14	47-10-123-14	47-10-143-14	47-10-163-10	47-10-183-14
			4 (.157)	5.6 (.219)	2.4 (.093)		4.2 (.166)	4 (.16)	7.2 (.28)	47-10-105-14	47-10-125-14	47-10-145-14	47-10-165-10	47-10-185-14
			5.6 (.220)	7.1 (.281)	4 (.156)		5.8 (.229)	5.6 (.22)	8.8 (.35)	47-10-107-14	47-10-127-14	47-10-147-14	47-10-167-10	47-10-187-14
			0.8 (.031)	1.5 (.058)	0.4 (.015)		1 (.041)	2.5 (.10)	5.7 (.22)	47-11-101-14	47-11-121-14	47-11-141-14	47-11-161-10	47-11-181-14
								4 (.16)	7.2 (.28)	47-12-101-14	47-12-121-14	47-12-141-14	47-12-161-10	47-12-181-14
								5.6 (.22)	8.8 (.35)	47-13-101-14	47-13-121-14	47-13-141-14	47-13-161-10	47-13-181-14
			1.5 (.059)	2.5 (.100)	0.4 (.015)		1.8 (.070)	3.2 (.13)	6.4 (.25)	47-11-102-14	47-11-122-14	47-11-142-14	47-11-162-10	47-11-182-14
								4.7 (.19)	7.9 (.31)	47-12-102-14	47-12-122-14	47-12-142-14	47-12-162-10	47-12-182-14
								6.3 (.25)	9.5 (.37)	47-13-102-14	47-13-122-14	47-13-142-14	47-13-162-10	47-13-182-14
Floating Style	11.4 (.45)	8.6 (.34)	~	0.8 (.031)	2 (.080)	2.1 (.08)	2.6 (.101)	1.9 (.07)	5.1 (.20)	47-10-110-14	47-10-130-14	47-10-150-14	47-10-170-10	47-10-190-10
								3.4 (.13)	6.6 (.26)	47-11-110-14	47-11-130-14	47-11-150-14	47-11-170-10	47-11-190-14
								5 (.19)	8.2 (.32)	47-12-110-14	47-12-130-14	47-12-150-14	47-12-170-10	47-12-190-14
			0.8 (.031)	1.6 (.063)	2.8 (.111)		3.4 (.132)	1.9 (.07)	5.1 (.20)	47-10-111-14	47-10-131-14	47-10-151-14	47-10-171-10	47-10-191-14
								3.4 (.13)	6.6 (.26)	47-11-111-14	47-11-131-14	47-11-151-14	47-11-171-10	47-11-191-14
								5 (.19)	8.2 (.32)	47-12-111-14	47-12-131-14	47-12-151-14	47-12-171-10	47-12-191-14
			1.6 (.063)	2.4 (.094)	3.6 (.143)		4.2 (.164)	3.4 (.13)	6.6 (.26)	47-10-112-14	47-10-132-14	47-10-152-14	47-10-172-10	47-10-192-14
								5 (.19)	8.2 (.32)	47-11-112-14	47-11-132-14	47-11-152-14	47-11-172-10	47-11-192-14

Part numbers in shaded rows (shown in table) are fully retracting in minimum panel thickness

To add a black powder coated finish, change the part number from the table as shown:

Change 1 to 5: 47-80-102-**1**4
47-80-102-**5**4

Change 2 to 6: 47-80-102-**2**4
47-80-102-**6**4

Change 3 to 7: 47-80-102-**3**4
47-80-102-**7**4

For a smooth knob, change the part number from the table as shown:

Change 0 to 1: 47-90-161-2**0**
47-90-161-2**1**

Change 4 to 5: 47-90-101-2**4**
47-90-101-2**5**

Part Number

See table

All screw part numbers shown in table are for a natural knob finish and a knurled knob

For black finish and smooth knob options, minimums may apply

TORX® is a registered trademark of *CAMCAR* Innovations

Dimensions in millimeters (inch) unless otherwise stated

47 Captive Screws

Styled knob series · 6-32 thread size

- **Smooth knob meets UL-1950**
- **Designed for hand operation**
- **Spring ejected**
- **Wide variety of sizes, recesses and installation options**

Material and Finish

Ferrule:
Press-in: Hardened carbon steel, zinc plate, chromate, plus sealer
P.C. board style: 300 Series stainless steel, passivated
Flare-in, floating and snap-in: Aluminum, natural

Knob: Aluminum, natural or black powder coated

Screw: Hardened carbon steel, zinc plated, chromate, plus sealer

Installation Notes

See pages 546-547, 627

Notes

To ensure you receive *SOUTHCO*® quality parts, look for the segmented circle

Recess Styles

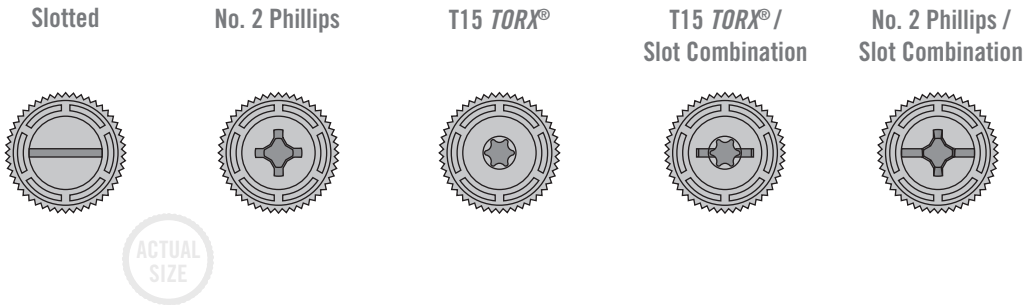

Knob Height and Screw Projection

(Flare-in style shown)

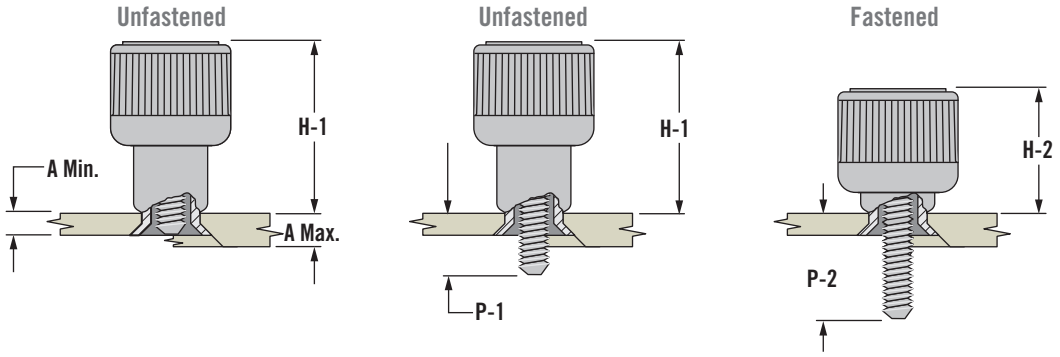

Installation Styles

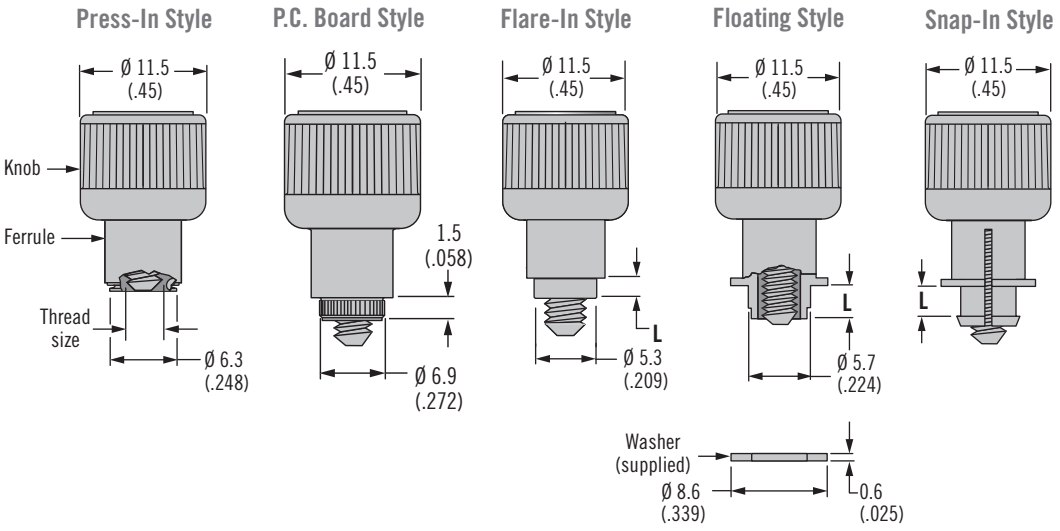

TORX® is a registered trademark of *CAMCAR* Innovations

Dimensions in millimeters (inch) unless otherwise stated

Installation Style	Knob Height		Outer Panel Dimensions		B	Total Float	Flange Length L	Screw Projection Beyond Outer Surface of Panel		Part Number				
	H-1	H-2	A Min.	A Max.				P-1	P-2	Slotted Recess	Phillips Recess	*TORX*® Recess	*TORX*® / Slot Combination	Phillips / Slot Combination
Press-In Style	15.9 (.63)	11.2 (.44)	0.9 (.036)	~	~	0.8 (.03)	~	0.5 (.02)	5.3 (.21)	47-60-201-24	47-60-221-24	47-60-241-24	47-60-261-20	47-60-281-24
								2.1 (.08)	6.9 (.27)	47-61-201-24	47-61-221-24	47-61-241-24	47-61-261-20	47-61-281-24
								3.7 (.15)	8.5 (.33)	47-62-201-24	47-62-221-24	47-62-241-24	47-62-261-20	47-62-281-24
								5.3 (.21)	10.1 (.40)	47-63-201-24	47-63-221-24	47-63-241-24	47-63-261-20	47-63-281-24
P.C. Board Style	14.8 (.58)	10 (.39)	1.6 (.061)	~	~	0.8 (.03)	~	1.4 (.06)	6.1 (.24)	47-65-201-34	47-65-221-34	47-65-241-34	47-65-261-30	47-65-281-34
Flare-In Style	15.3 (.60)	10.4 (.41)	1.5 (.058)	3.2 (.125)	0.4 (.015)	0.8 (.03)	1.8 (.07)	1.1 (.04)	6 (.24)	47-10-202-14	47-10-222-14	47-10-242-14	47-10-262-10	47-10-282-14
			3.2 (.125)	4.8 (.189)	1.6 (.062)		3.4 (.135)	2.7 (.11)	7.6 (.30)	47-10-204-14	47-10-224-14	47-10-244-14	47-10-264-10	47-10-284-14
			4.8 (.189)	6.4 (.250)	3.2 (.125)		5 (.197)	4.3 (.17)	9.2 (.36)	47-10-206-14	47-10-226-14	47-10-246-14	47-10-266-10	47-10-286-14
			6.4 (.250)	7.9 (.312)	4.8 (.189)		6.1 (.26)	5.9 (.23)	10.8 (.43)	47-10-208-14	47-10-228-14	47-10-248-14	47-10-268-10	47-10-288-14
			1.5 (.058)	3.2 (.125)	0.4 (.015)		1.8 (.07)	2.7 (.11)	7.6 (.30)	47-11-202-14	47-11-222-14	47-11-242-14	47-11-262-10	47-11-282-14
								4.3 (.17)	9.2 (.36)	47-12-202-14	47-12-222-14	47-12-242-14	47-12-262-10	47-12-282-14
								5.9 (.23)	10.8 (.43)	47-13-202-14	47-13-222-14	47-13-242-14	47-13-262-10	47-13-282-14
			3.2 (.125)	4.8 (.189)	1.6 (.062)		3.4 (.135)	1.6 (.062)	4.8 (.189)	47-11-204-14	47-11-224-14	47-11-244-14	47-11-264-10	47-11-284-14
								5.9 (.23)	10.8 (.43)	47-12-204-14	47-12-224-14	47-12-244-14	47-12-264-10	47-12-284-14
			4.8 (.189)	6.4 (.250)	3.2 (.125)		5 (.197)	5.9 (.23)	10.8 (.43)	47-11-206-14	47-11-226-14	47-11-246-14	47-11-266-10	47-11-286-14
Floating Style	15.3 (.60)	10.6 (.42)	~	0.8 (.031)	2.1 (.083)	2.2 (.09)	2.9 (.113)	2.4 (.09)	7.2 (.28)	47-10-210-14	47-10-230-14	47-10-250-14	47-10-270-10	47-10-290-14
								4 (.16)	8.8 (.35)	47-11-210-14	47-11-230-14	47-11-250-14	47-11-270-10	47-11-290-14
								5.6 (.22)	10.4 (.41)	47-12-210-14	47-12-230-14	47-12-250-14	47-12-270-10	47-12-290-14
			0.8 (.031)	1.6 (.063)	2.9 (.114)		3.7 (.144)	2.4 (.09)	7.2 (.28)	47-10-211-14	47-10-231-14	47-10-251-14	47-10-271-10	47-10-291-14
								4 (.16)	8.8 (.35)	47-11-211-14	47-11-231-14	47-11-251-14	47-11-271-10	47-11-291-14
								5.6 (.22)	10.4 (.41)	47-12-211-14	47-12-231-14	47-12-251-14	47-12-271-10	47-12-291-14
			1.6 (.063)	2.4 (.094)	3.7 (.146)		4.5 (.176)	4 (.16)	8.8 (.35)	47-10-212-14	47-10-232-14	47-10-252-14	47-10-272-10	47-10-292-14
								5.6 (.22)	10.4 (.41)	47-11-212-14	47-11-232-14	47-11-252-14	47-11-272-10	47-11-292-14
Snap-In Style	15.3 (.60)	10.6 (.42)	0.5 (.020)	1 (.039)	2 (.079)	0.8 (.03)	1.1 (.044)	0.8 (.03)	5.6 (.22)	47-60-210-14	47-60-230-14	47-60-250-14	47-60-270-10	47-60-290-14
								2.4 (.09)	7.2 (.28)	47-61-210-14	47-61-230-14	47-61-250-14	47-61-270-10	47-61-290-14
								4 (.16)	8.8 (.35)	47-62-210-14	47-62-230-14	47-62-250-14	47-62-270-10	47-62-290-14
								5.6 (.22)	10.4 (.41)	47-63-210-14	47-63-230-14	47-63-250-14	47-63-270-10	47-63-290-14
			1 (.039)	1.6 (.063)	2.6 (.103)		1.7 (.067)	2.4 (.09)	7.2 (.28)	47-60-212-14	47-60-232-14	47-60-252-14	47-60-272-10	47-60-292-14
								4 (.16)	8.8 (.35)	47-61-212-14	47-61-232-14	47-61-252-14	47-61-272-10	47-61-292-14
								5.6 (.22)	10.4 (.41)	47-62-212-14	47-62-232-14	47-62-252-14	47-62-272-10	47-62-292-14

Part numbers in shaded rows (shown in table) are fully retracting in minimum panel thickness

To add a black powder coated finish, change the part number from the table as shown:

Change 1 to 5: 47-80-102-**1**4
47-80-102-**5**4

Change 2 to 6: 47-80-102-**2**4
47-80-102-**6**4

Change 3 to 7: 47-80-102-**3**4
47-80-102-**7**4

For a smooth knob, change the part number from the table as shown:

Change 0 to 1: 47-90-161-2**0**
47-90-161-2**1**

Change 4 to 5: 47-90-101-2**4**
47-90-101-2**5**

Part Number

See table

All screw part numbers shown in table are for a natural knob finish and a knurled knob

For black finish and smooth knob options, minimums may apply

TORX® is a registered trademark of *CAMCAR* Innovations

Dimensions in millimeters (inch) unless otherwise stated

47 Captive Screws

Styled knob series · 8-32 thread size

- **Designed for hand operation**
- **Spring ejected**
- **Wide variety of sizes, recesses and installation options**

Material and Finish

Ferrule:
Press-in: Hardened carbon steel, zinc plate, chromate, plus sealer
Flare-in, floating and snap-in: Aluminum, natural

Knob: Aluminum, natural or black powder coated

Screw: Hardened carbon steel, zinc plated, chromate, plus sealer

Installation Notes

See pages 546-547, 627

Notes

To ensure you receive *SOUTHCO*® quality parts, look for the segmented circle

Recess Styles

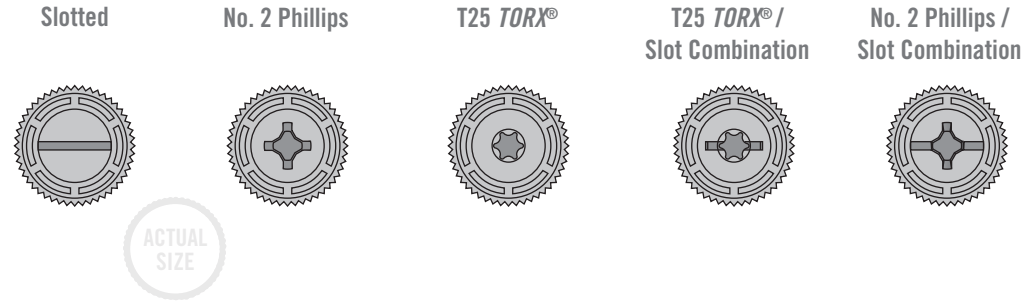

Knob Height and Screw Projection

(Flare-in style shown)

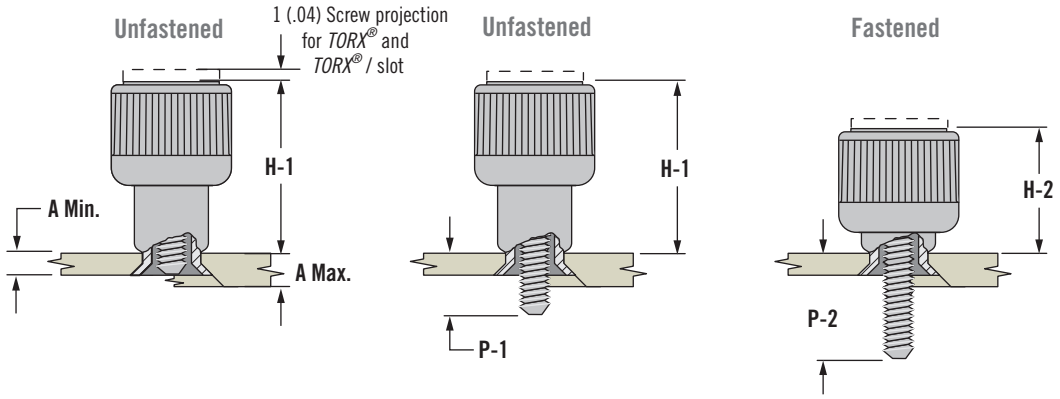

Installation Styles

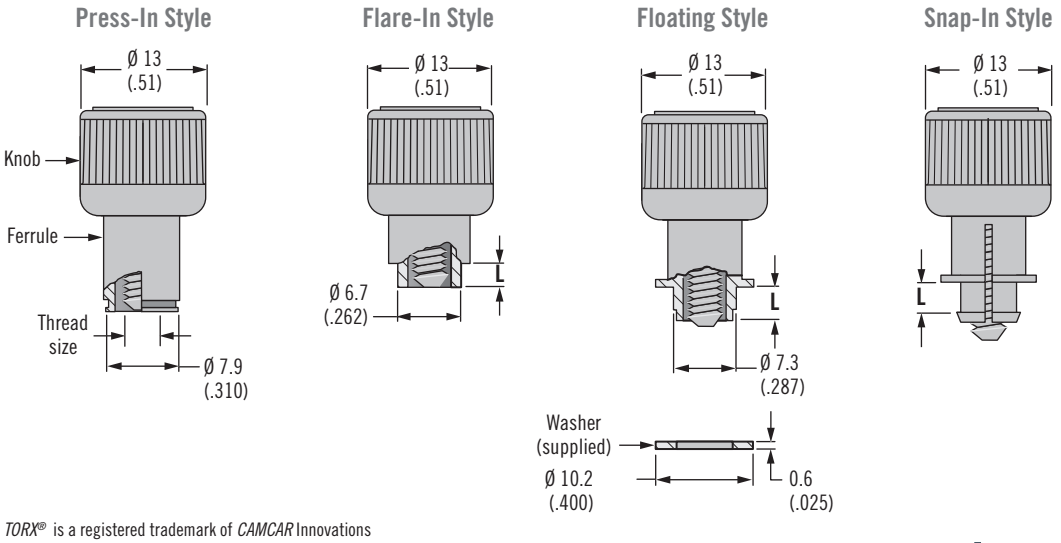

TORX® is a registered trademark of *CAMCAR* Innovations

Dimensions in millimeters (inch) unless otherwise stated

Installation Style	Knob Height		Outer Panel Dimensions		B	Total Float	Flange Length L	Screw Projection Beyond Outer Surface of Panel		Part Number				
	H-1	H-2	A Min.	A Max.				P-1	P-2	Slotted Recess	Phillips Recess	*TORX*® Recess	*TORX*® / Slot Combination	Phillips / Slot Combination
Press-In Style	16.2 (.64)	11.2 (.44)	0.9 (.036)	~	~	0.8 (.03)	~	0.5 (.02)	5.6 (.22)	47-60-301-24	47-60-321-24	47-60-341-20	47-60-361-20	47-60-381-20
								2 (.08)	7.1 (.28)	47-61-301-24	47-61-321-24	47-61-341-20	47-61-361-20	47-61-381-20
								3.8 (.15)	8.9 (.35)	47-62-301-24	47-62-321-24	47-62-341-20	47-62-361-20	47-62-381-20
								5.3 (.21)	10.4 (.41)	47-63-301-24	47-63-321-24	47-63-341-20	47-63-361-20	47-63-381-20
Flare-In Style	15.6 (.61)	10.5 (.41)	1.5 (.058)	3.2 (.125)	0.4 (.015)	0.9 (.03)	1.8 (.070)	1 (.04)	6 (.24)	47-10-302-14	47-10-322-14	47-10-342-10	47-10-362-10	47-10-382-10
			3.2 (.126)	4.8 (.189)	1.6 (.062)		3.4 (.135)	2.8 (.11)	7.6 (.3)	47-10-304-14	47-10-324-14	47-10-344-10	47-10-364-10	47-10-384-10
			4.8 (.189)	6.4 (.250)	3.2 (.125)		5 (.197)	4.3 (.17)	9.2 (.36)	47-10-306-14	47-10-326-14	47-10-346-10	47-10-366-10	47-10-386-10
			6.3 (.251)	7.9 (.312)	4.8 (.189)		6.6 (.260)	5.8 (.23)	10.8 (.43)	47-10-308-14	47-10-328-14	47-10-348-10	47-10-368-10	47-10-388-10
			1.5 (.058)	3.2 (.125)	0.4 (.015)		1.8 (.07)	2.8 (.11)	7.6 (.3)	47-11-302-14	47-11-322-14	47-11-342-10	47-11-362-10	47-11-382-10
								4.3 (.17)	9.2 (.36)	47-12-302-14	47-12-322-14	47-12-342-10	47-12-362-10	47-12-382-10
								5.8 (.23)	10.8 (.43)	47-13-302-14	47-13-322-14	47-13-342-10	47-13-362-10	47-13-382-10
			3.2 (.126)	4.8 (.189)	1.6 (.062)		3.4 (.135)	4.3 (.17)	9.2 (.36)	47-11-304-14	47-11-324-14	47-11-344-10	47-11-364-10	47-11-384-10
								5.8 (.23)	10.8 (.43)	47-12-304-14	47-12-324-14	47-12-344-10	47-12-364-10	47-12-384-10
			4.8 (.189)	6.4 (.250)	3.2 (.125)		5 (.197)	5.8 (.23)	10.8 (.43)	47-11-306-14	47-11-326-14	47-11-346-10	47-11-366-10	47-11-386-10
Floating Style	16 (.63)	11.2 (.44)	~	0.8 (.031)	2.3 (.09)	2.3 (.09)	3.2 (.127)	2.3 (.09)	7.1 (.28)	47-10-310-14	47-10-330-14	47-10-350-10	47-10-370-10	47-10-390-10
								3.8 (.15)	8.9 (.35)	47-11-310-14	47-11-330-14	47-11-350-10	47-11-370-10	47-11-390-10
								5.6 (.22)	10.4 (.41)	47-12-310-14	47-12-330-14	47-12-350-10	47-12-370-10	47-12-390-10
			0.8 (.031)	1.6 (.063)	3.1 (.121)		4 (.158)	2.3 (.09)	7.1 (.28)	47-10-311-14	47-10-331-14	47-10-351-10	47-10-371-10	47-10-391-10
								3.8 (.15)	8.9 (.35)	47-11-311-14	47-11-331-14	47-11-351-10	47-11-371-10	47-11-391-10
								5.6 (.22)	10.4 (.41)	47-12-311-14	47-12-331-14	47-12-351-10	47-12-371-10	47-12-391-10
			1.6 (.063)	2.4 (.094)	3.9 (.153)		4.8 (.190)	3.8 (.15)	8.9 (.35)	47-10-312-14	47-10-332-14	47-10-352-10	47-10-372-10	47-10-392-10
								5.6 (.22)	10.4 (.41)	47-11-312-14	47-11-332-14	47-11-352-10	47-11-372-10	47-11-392-10
Snap-In Style	15.7 (.62)	11.2 (.44)	0.5 (.020)	1 (.039)	2 (.079)	0.9 (.03)	1.1 (.044)	1 (.04)	3 (.22)	47-60-310-14	47-60-330-14	47-60-350-10	47-60-370-10	47-60-390-10
								2.8 (.11)	7.1 (.28)	47-61-310-14	47-61-330-14	47-61-350-10	47-61-370-10	47-61-390-10
								4.3 (.17)	8.9 (.35)	47-63-310-14	47-62-330-14	47-62-350-10	47-62-370-10	47-62-390-10
								5.8 (.23)	10.4 (.41)	47-63-310-14	47-63-330-14	47-63-350-10	47-63-370-10	47-63-390-10
			1 (.039)	1.6 (.063)	2.6 (.103)		1.7 (.068)	2.8 (.11)	7.1 (.28)	47-60-312-14	47-60-332-14	47-60-352-10	47-60-372-10	47-60-392-10
								4.3 (.17)	8.9 (.35)	47-61-312-14	47-61-332-14	47-61-352-10	47-61-372-10	47-61-392-10
								5.8 (.23)	10.4 (.41)	47-62-312-14	47-62-332-14	47-62-352-10	47-62-372-10	47-62-392-10
			1.6 (.063)	2.5 (.098)	3.5 (.138)		2.6 (.103)	2.8 (.11)	7.1 (.28)	47-60-314-14	47-60-334-14	47-60-354-10	47-60-374-10	47-60-394-10
								4.3 (.17)	8.9 (.35)	47-61-314-14	47-61-334-14	47-61-354-10	47-61-374-10	47-61-394-10
								5.8 (.23)	10.4 (.41)	47-62-314-14	47-62-334-14	47-62-354-10	47-62-374-10	47-62-394-10

Part numbers in shaded rows (shown in table) are fully retracting in minimum panel thickness

To add a black powder coated finish, change the part number from the table as shown:

Change 1 to 5: 47-80-102-**1**4
47-80-102-**5**4

Change 2 to 6: 47-80-102-**2**4
47-80-102-**6**4

For a smooth knob, change the part number from the table as shown:

Change 0 to 1: 47-90-161-2**0**
47-90-161-2**1**

Change 4 to 5: 47-90-101-2**4**
47-90-101-2**5**

Part Number

See table

All screw part numbers shown in table are for a natural knob finish and a knurled knob

For black finish and smooth knob options, minimums may apply

TORX® is a registered trademark of *CAMCAR* Innovations

Dimensions in millimeters (inch) unless otherwise stated

47 Captive Screws

Styled knob series · 10-32 thread size

- **Designed for hand operation**
- **Spring ejected**
- **Wide variety of sizes, recesses and installation options**

Material and Finish

Ferrule:
Press-in: Hardened carbon steel, zinc plate, chromate, plus sealer
Flare-in, floating and snap-in: Aluminum, natural

Knob: Aluminum, natural or black powder coated

Screw: Hardened carbon steel, zinc plated, chromate, plus sealer

Installation Notes

See pages 546-547, 627

Notes

To ensure you receive *SOUTHCO*® quality parts, look for the segmented circle

Recess Styles

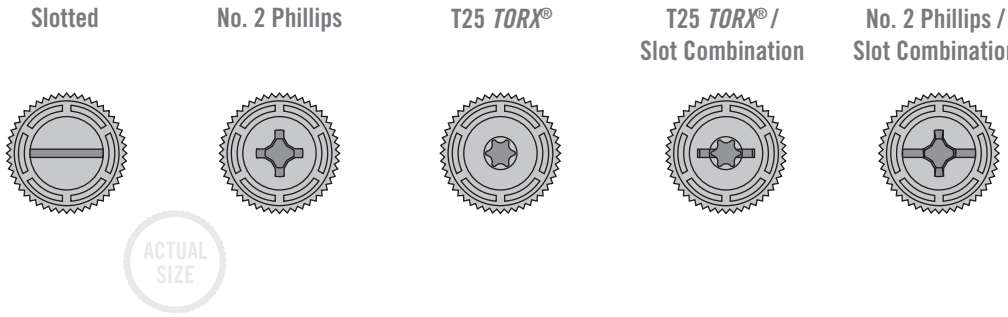

Knob Height and Screw Projection

(Flare-in style shown)

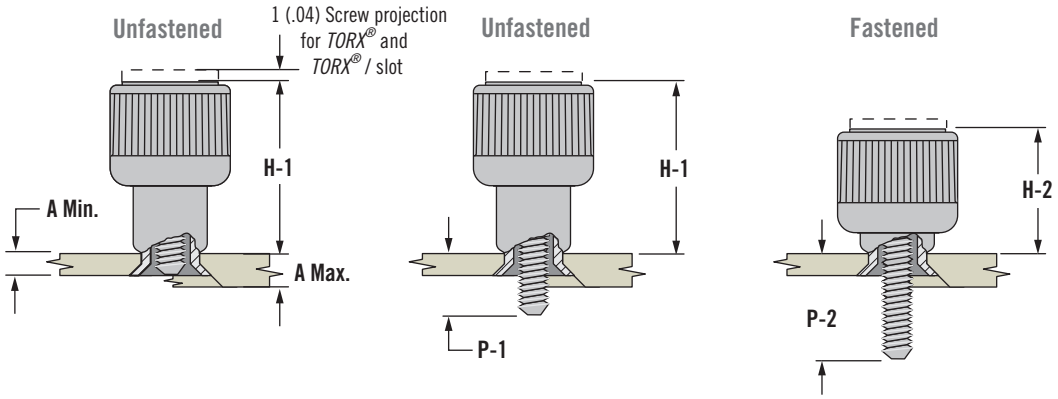

Installation Styles

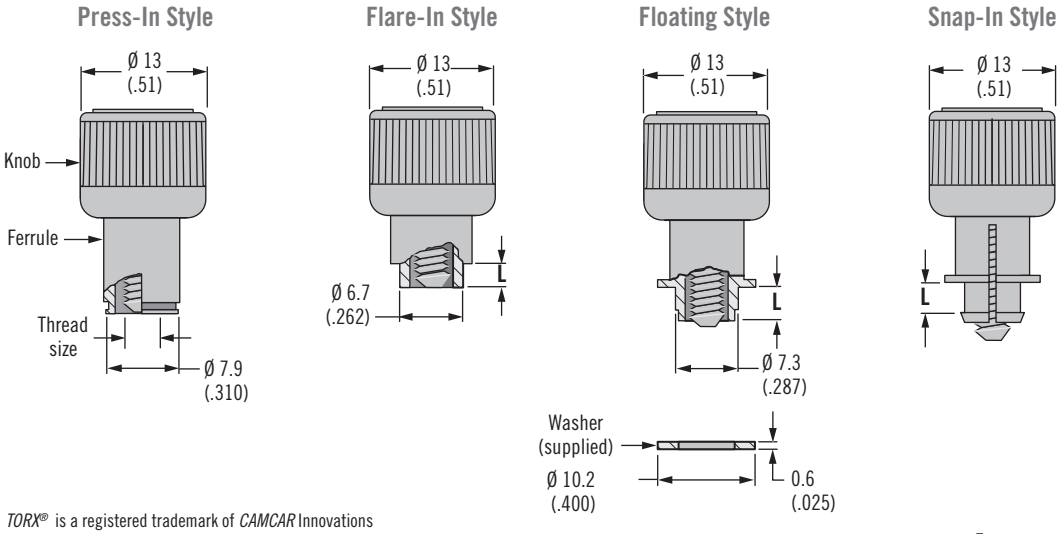

TORX® is a registered trademark of *CAMCAR* Innovations

Dimensions in millimeters (inch) unless otherwise stated

Installation Style	Knob Height		Outer Panel Dimensions		B	Total Float	Flange Length L	Screw Projection Beyond Outer Surface of Panel		Part Number				
	H-1	H-2	A Min.	A Max.				P-1	P-2	Slotted Recess	Phillips Recess	*TORX*® Recess	*TORX*® / Slot Combination	Phillips / Slot Combination
Press-In Style	16.2 (.64)	11.2 (.44)	0.9 (.036)	~	~	0.6 (.02)	~	0.6 (.02)	5.5 (.22)	47-60-501-24	47-60-521-24	47-60-541-20	47-60-561-20	47-60-581-20
								2.2 (.09)	7.2 (.28)	47-61-501-24	47-61-521-24	47-61-541-20	47-61-561-20	47-61-581-20
								3.8 (.15)	8.9 (.35)	47-62-501-24	47-62-521-24	47-62-541-20	47-62-561-20	47-62-581-20
								5.4 (.21)	10.3 (.41)	47-63-501-24	47-63-521-24	47-63-541-20	47-63-561-20	47-63-581-20
Flare-In Style	15.6 (.61)	10.5 (.41)	1.5 (.058)	3.2 (.125)	0.4 (.015)	0.6 (.02)	1.8 (.070)	1.2 (.05)	6.3 (.25)	47-10-502-14	47-10-522-14	47-10-542-10	47-10-562-10	47-10-582-10
			3.2 (.125)	4.7 (.187)	1.6 (.062)		3.4 (.135)	2.8 (.11)	7.9 (.31)	47-10-504-14	47-10-524-14	47-10-544-10	47-10-564-10	47-10-584-10
			4.8 (.189)	6.4 (.250)	3.2 (.125)		5 (.197)	4.4 (.17)	9.5 (.37)	47-10-506-14	47-10-526-14	47-10-546-10	47-10-566-10	47-10-586-10
			6.3 (.251)	7.9 (.312)	4.8 (.187)		6.6 (.260)	6 (.24)	11.1 (.44)	47-10-508-14	47-10-528-14	47-10-548-10	47-10-568-10	47-10-588-10
			1.5 (.058)	3.2 (.125)	0.4 (.015)		1.8 (.070)	2.8 (.11)	7.9 (.31)	47-11-502-14	47-11-522-14	47-11-542-10	47-11-562-10	47-11-582-10
								4.4 (.17)	9.5 (.37)	47-12-502-14	47-12-522-14	47-12-542-10	47-12-562-10	47-12-582-10
								6 (.24)	11.1 (.44)	47-13-502-14	47-13-522-14	47-13-542-10	47-13-562-10	47-13-582-10
			3.2 (.125)	4.8 (.187)	1.6 (.062)		3.4 (.135)	4.4 (.17)	9.5 (.37)	47-11-504-14	47-11-524-14	47-11-544-10	47-11-564-10	47-11-584-10
								6 (.24)	11.1 (.44)	47-12-504-14	47-12-524-14	47-12-544-10	47-12-564-10	47-12-584-10
			4.8 (.189)	6.4 (.250)	3.2 (.125)		5 (.197)	6 (.24)	11.1 (.44)	47-11-506-14	47-11-526-14	47-11-546-10	47-11-566-10	47-11-586-10
Floating Style	16 (.63)	11.2 (.44)	~	0.8 (.031)	2.3 (.090)	2.3 (.09)	3.2 (.127)	2.3 (.09)	7.1 (.28)	47-10-510-14	47-10-530-14	47-10-550-10	47-10-570-10	47-10-590-10
								4 (.16)	8.8 (.35)	47-11-510-14	47-11-530-14	47-11-550-10	47-11-570-10	47-11-590-10
								5.6 (.22)	10.4 (.41)	47-12-510-14	47-12-530-14	47-12-550-10	47-12-570-10	47-12-590-10
			0.8 (.031)	1.6 (.063)	3.1 (.122)		4 (.158)	2.4 (.09)	7.1 (.28)	47-10-511-14	47-10-531-14	47-10-551-10	47-10-571-10	47-10-591-10
								4 (.16)	8.8 (.35)	47-11-511-14	47-11-531-14	47-11-551-10	47-11-571-10	47-11-591-10
								5.6 (.22)	10.4 (.41)	47-12-511-14	47-12-531-14	47-12-551-10	47-12-571-10	47-12-591-10
			1.6 (.063)	2.4 (.094)	3.9 (.153)		4.8 (.190)	4 (.16)	8.8 (.35)	47-10-512-14	47-10-532-14	47-10-552-10	47-10-572-10	47-10-592-10
								5.6 (.22)	10.4 (.41)	47-11-512-14	47-11-532-14	47-11-552-10	47-11-572-10	47-11-592-10
Snap-In Style	15.7 (.62)	11.2 (.44)	0.5 (.020)	1 (.039)	2 (.079)	.9 (.04)	1.1 (.044)	1.2 (.04)	5.6 (.22)	47-60-510-14	47-60-530-14	47-60-550-10	47-60-570-10	47-60-590-10
								2.8 (.11)	7.1 (.28)	47-61-510-14	47-61-530-14	47-61-550-10	47-61-570-10	47-61-590-10
								4.3 (.17)	8.8 (.35)	47-63-510-14	47-62-530-14	47-62-550-10	47-62-570-10	47-62-590-10
								5.9 (.23)	10.4 (.41)	47-63-510-14	47-63-530-14	47-63-550-10	47-63-570-10	47-63-590-10
			1 (.039)	1.6 (.063)	2.6 (.103)		1.7 (.068)	2.8 (.11)	7.1 (.28)	47-60-512-14	47-60-532-14	47-60-552-10	47-60-572-10	47-60-592-10
								4.3 (.17)	8.8 (.35)	47-61-512-14	47-61-532-14	47-61-552-10	47-61-572-10	47-61-592-10
								5.9 (.23)	10.4 (.41)	47-62-512-14	47-62-532-14	47-62-552-10	47-62-572-10	47-62-592-10
			1.6 (.063)	2.5 (.098)	3.5 (.138)		2.6 (.103)	2.8 (.11)	7.1 (.28)	47-60-514-14	47-60-534-14	47-60-554-10	47-60-574-10	47-60-594-10
								4.3 (.17)	8.8 (.35)	47-61-514-14	47-61-534-14	47-61-554-10	47-61-574-10	47-61-594-10
								5.9 (.23)	10.4 (.41)	47-62-514-14	47-62-534-14	47-62-554-10	47-62-574-10	47-62-594-10

Part numbers in shaded rows (shown in table) are fully retracting in minimum panel thickness

To add a black powder coated finish, change the part number from the table as shown:

Change 1 to 5: 47-80-102-**1**4
47-80-102-**5**4

Change 2 to 6: 47-80-102-**2**4
47-80-102-**6**4

For a smooth knob, change the part number from the table as shown:

Change 0 to 1: 47-90-161-2**0**
47-90-161-2**1**

Change 4 to 5: 47-90-101-2**4**
47-90-101-2**5**

Part Number

See table

All screw part numbers shown in table are for a natural knob finish and a knurled knob

For black finish and smooth knob options, minimums may apply

TORX® is a registered trademark of *CAMCAR* Innovations

Dimensions in millimeters (inch) unless otherwise stated

47 Captive Screws

Styled knob series · 1/4-20 thread size

- **Designed for hand operation**
- **Spring ejected**
- **Wide variety of sizes, recesses and installation options**

Material and Finish

Ferrule:
Press-in: Hardened carbon steel, zinc plate, chromate, plus sealer
Flare-in and Floating: Aluminum, natural

Knob: Aluminum, natural or black powder coated

Screw: Hardened carbon steel, zinc plated, chromate, plus sealer

Installation Notes

See pages 546-547, 627

Notes

To ensure you receive *SOUTHCO*® quality parts, look for the segmented circle

Recess Styles

Slotted | No. 2 Phillips | T30 *TORX*® | T30 *TORX*® / Slot Combination | No. 2 Phillips / Slot Combination

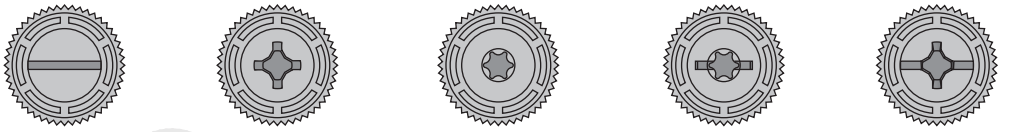

ACTUAL SIZE

Knob Height and Screw Projection

(Flare-in style shown)

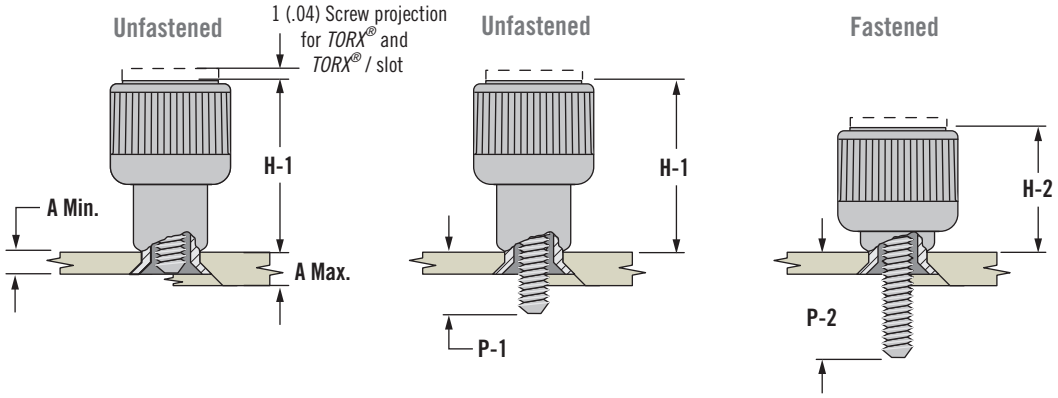

Installation Styles

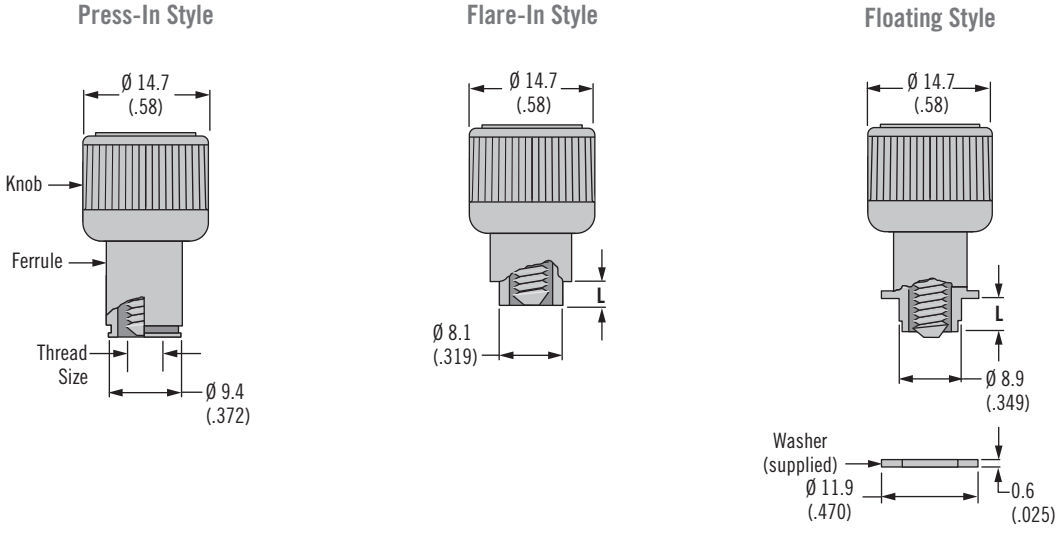

TORX® is a registered trademark of *CAMCAR* Innovations

Dimensions in millimeters (inch) unless otherwise stated

southco®

Installation Style	Knob Height		Outer Panel Dimensions		B	Total Float	Flange Length L	Screw Projection Beyond Outer Surface of Panel		Part Number				
	H-1	H-2	A Min.	A Max.				P-1	P-2	Slotted Recess	Phillips Recess	*TORX*® Recess	*TORX*® / Slot Combination	Phillips / Slot Combination
Press-In Style	20 (.79)	13.4 (.53)	0.9 (.036)	~	~	0.8 (.03)	~	0.5 (.02)	7.1 (.28)	47-60-601-24	47-60-621-24	47-60-641-20	47-60-661-20	47-60-681-20
								2.1 (.08)	8.7 (.34)	47-61-601-24	47-61-621-24	47-61-641-20	47-61-661-20	47-61-681-20
								3.7 (.15)	10.3 (.41)	47-62-601-24	47-62-621-24	47-62-641-20	47-62-661-20	47-62-681-20
								5.3 (.21)	11.9(.47)	47-63-601-24	47-63-621-24	47-63-641-20	47-63-661-20	47-63-681-20
Flare-In Style	19.3 (.76)	12.7 (.50)	1.5 (.058)	3.2 (.125)	0.4 (.015)	0.9 (.03)	1.8 (.070)	1.2 (.05)	7.8 (.31)	47-10-602-14	47-10-622-14	47-10-642-10	47-10-662-10	47-10-682-10
			3.2 (.126)	4.8 (.189)	1.6 (.062)		3.4 (.135)	2.8 (.11)	9.4 (.37)	47-10-604-14	47-10-624-14	47-10-644-10	47-10-664-10	47-10-684-10
			4.8 (.188)	6.4 (.250)	3.2 (.125)		5 (.197)	4.4 (.17)	11 (.43)	47-10-606-14	47-10-626-14	47-10-646-10	47-10-666-10	47-10-686-10
			6.4 (.251)	7.9 (.312)	4.8 (.189)		6.6 (.260)	6 (.24)	12.6 (.50)	47-10-608-14	47-10-628-14	47-10-648-10	47-10-668-10	47-10-688-10
			1.5 (.058)	3.2 (.125)	0.4 (.015)		1.8 (.070)	2.8 (.11)	9.4 (.37)	47-11-602-14	47-11-622-14	47-11-642-10	47-11-662-10	47-11-682-10
								4.4 (.17)	11 (.43)	47-12-602-14	47-12-622-14	47-12-642-10	47-12-662-10	47-12-682-10
								6 (.24)	12.6 (.50)	47-13-602-14	47-13-622-14	47-13-642-10	47-13-662-10	47-13-682-10
			3.2 (.126)	4.8 (.189)	1.6 (.062)		3.4 (.135)	4.4 (.17)	11 (.43)	47-11-604-14	47-11-624-14	47-11-644-10	47-11-664-10	47-11-684-10
								6 (.24)	12.6 (.50)	47-12-604-14	47-12-624-14	47-12-644-10	47-12-664-10	47-12-684-10
			4.8 (.189)	6.4 (.250)	3.2 (.125)		5 (.197)	6 (.24)	12.6 (.50)	47-11-606-14	47-11-626-14	47-11-646-10	47-11-666-10	47-11-686-10
Floating Style	20 (.79)	13.3 (.52)	~	0.8 (.031)	2.3 (.090)	2.3 (.09)	3.2 (.127)	2.1 (.08)	8.8 (.35)	47-10-610-14	47-10-630-14	47-10-650-10	47-10-670-10	47-10-690-10
								3.7 (.15)	10.4 (.41)	47-11-610-14	47-11-630-14	47-11-650-10	47-11-670-10	47-11-690-10
								5.3 (.21)	12 (.47)	47-12-610-14	47-12-630-14	47-12-650-10	47-12-670-10	47-12-690-10
			0.8 (.031)	1.6 (.063)	3.1 (.122)		4 (.158)	2.1 (.08)	8.8 (.35)	47-10-611-14	47-10-631-14	47-10-651-10	47-10-671-10	47-10-691-10
								3.7 (.15)	10.4 (.41)	47-11-611-14	47-11-631-14	47-11-651-10	47-11-671-10	47-11-691-10
								5.3 (.21)	12 (.47)	47-12-611-14	47-12-631-14	47-12-651-10	47-12-671-10	47-12-691-10
			1.6 (.063)	2.4 (.094)	3.9 (.153)		4.8 (.190)	3.7 (.15)	10.4 (.41)	47-10-612-14	47-10-632-14	47-10-652-10	47-10-672-10	47-10-692-10
								5.3 (.21)	12 (.47)	47-11-610-14	47-11-632-14	47-11-652-10	47-11-672-10	47-11-692-10

Part numbers in shaded rows (shown in table) are fully retracting in minimum panel thickness

To add a black powder coated finish, change the part number from the table as shown:

Change 1 to 5: 47-80-102-**1**4
47-80-102-**5**4

Change 2 to 6: 47-80-102-**2**4
47-80-102-**6**4

For a smooth knob, change the part number from the table as shown:

Change 0 to 1: 47-90-161-2**0**
47-90-161-2**1**

Change 4 to 5: 47-90-101-2**4**
47-90-101-2**5**

Part Number

See table

All screw part numbers shown in table are for a natural knob finish and a knurled knob

For black finish and smooth knob options, minimums may apply

TORX® is a registered trademark of *CAMCAR* Innovations

Dimensions in millimeters (inch) unless otherwise stated

4C Captive Screws

Prism series · M3, M4 and M5 thread size

- **Designate access points with color**
- **Color match captive screws to your industrial design**
- **High strength screw for use with high torque drivers**
- **Knurled and smooth knobs available**

Material and Finish

Knob: PC/ABS

Screw: Hardened carbon steel, zinc plate, chromate, plus sealer

Spring: 300 series stainless steel, passivated

Standoff:
Press-in: Carbon steel, zinc plate, chromate, plus sealer
PCB: Stainless steel
Flare-in and Floating: Aluminum, natural

Performance Details

Flammability Rating: UL94-V0

Installation Notes

See pages 546-547, 627

See page 558 for details on ATCA compliant captive screws.

To ensure you receive *SOUTHCO*® quality parts, look for the segmented circle.

Recess Styles

M3

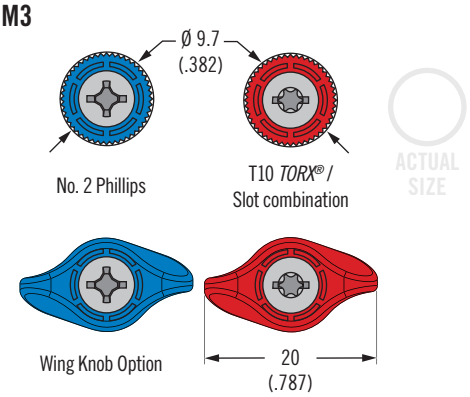

M4 and M5

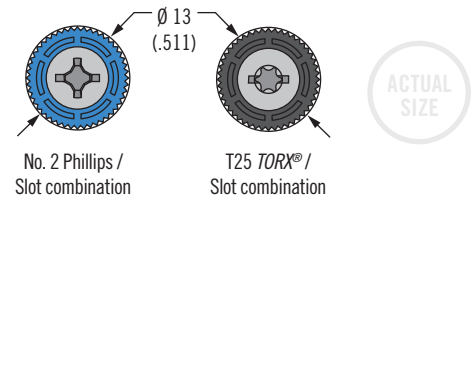

Installation Styles

M3

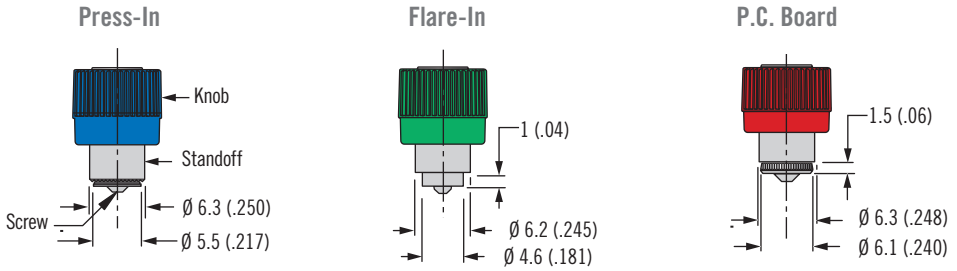

M4 and M5

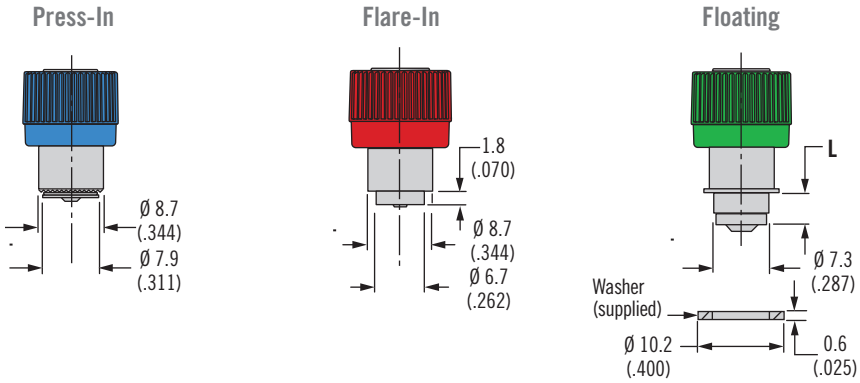

Knob Height and Screw Projection

(Press-in style shown)

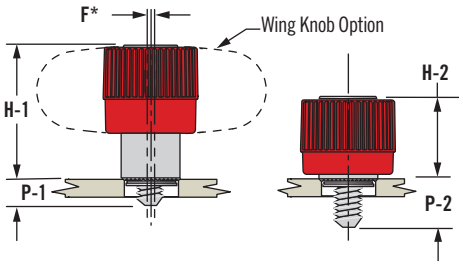

TORX® is a registered trademark of *CAMCAR* Innovations

Dimensions in millimeters (inch) unless otherwise stated

southco®

M3 Thread Size

Installation Style	Outer Panel Dimensions		B	Part Number		Screw Projection Beyond Outer Surface of Panel		Knob Height†		Total Float	Panel Preparation	
	A Min.	A Max.		Phillips Recess	*TORX*® / Slot Combination	P-1	P-2	H-1	H-2	F*	Ø D	Ø Z
Press-In Style	0.9 (.036)	~	~	4C-PH-M3-1P0-K000	4C-TS-M3-1P0-K000	0.8 (.03)	3.7 (.15)	11.5 (.45)	8.6 (.34)	0.7 (.03)	$5.6^{+0.04}_{-0.04}$ ($.219^{+.002}_{-.002}$)	$3.2^{+0.2}_{-0.1}$ ($.125^{+.008}_{-.004}$)
				4C-PH-M3-2P0-K000	4C-TS-M3-2P0-K000	2.5 (.10)	5.4 (.21)					
	0.8 (.031)	1.2 (.047)	~	4C-P1-P-0637-K000	4C-B1-P-0637-K000	0.6 (.024)	3.7 (.15)	12.7 (.50)	9.6 (.38)		$5.6^{+0.08}_{-0.0}$ ($.219^{+.003}_{-.0}$)	$3.2^{+0.2}_{-0.1}$ ($.125^{+.008}_{-.004}$)
				4C-P1-P-0647-K000	4C-B1-P-0647-K000		4.7 (.19)	15.1 (.59)	11 (.43)			
				4C-P1-P-0657-K000	4C-B1-P-0657-K000		5.7 (.22)	16.1 (.63)				
P.C. Board Style	1.6 (.063)	~	~	4C-PH-M3-1B0-K000	4C-TS-M3-1B0-K000	1.5 (.06)	3.8 (.15)	10.9 (.43)	8.5 (.33)		$5.6^{+0.1}_{-0.05}$ ($.220^{+.004}_{-.002}$)	$3.2^{+0.2}_{-0.1}$ ($.220^{+.008}_{-.004}$)
Flare-In Style	0.8 (.031)	1.5 (.058)	0.4 (.016)	4C-PH-M3-1F1-K000	4C-TS-M3-1F1-K000	0.8 (.03)	3.7 (.15)	11.5 (.45)	8.6 (.34)		$4.8^{+0.08}_{-0.05}$ ($.189^{+.003}_{-.002}$)	$3.0^{+0.2}_{-0.1}$ ($.125^{+.008}_{-.004}$)
				4C-PH-M3-2F1-K000	4C-TS-M3-2F1-K000	2.5 (.10)	5.4 (.21)					
		1.2 (.047)	0.2 (.008)	4C-P1-F-0637-K000	4C-B1-F-0637-K000	0.6 (.024)	3.7 (.15)	12.7 (.50)	9.6 (.38)			
				4C-P1-F-0647-K000	4C-B1-F-0647-K000		4.7 (.19)	15.1 (.59)	11 (.43)			
				4C-P1-F-0657-K000	4C-B1-F-0657-K000		5.7 (.22)	16.1 (.63)				

(shown in table)

000
Black

008
Blue

013
Red

014
Green

Your Color
Contact Southco

Part Number

See table

Specify Wing Knob:
(M3, Press-in, Flare-in only)
To indicate Wing Knob option, change K to W of the part number
Example:
4C-PH-M3-1P0-K000, Round Knob
4C-PH-M3-1P0-W000, Wing Knob

Notes: *F indicates the maximum float in the unfastened position.
† For panels thinner than 0.9 (.036), contact Southco.

TORX® is a registered trademark of *CAMCAR* Innovations

Part Number

See table

To indicate color, change the last three digits of the part number. For knob style, K = knurled and N = smooth. For smooth knob change K to N. Example:
4C-PS-06-1P0-K000, black, knurled
4C-PS-06-1P0-N013, red, smooth

4C Captive Screws

Prism series · M3, M4 and M5 thread size

M4 Thread Size

Installation Style	Outer Panel Dimensions		B	L	Part Number		Screw Projection Beyond Outer Surface Of Panel		Knob Height†		Total Float	Panel Preparation	
	A Min.	A Max.			Phillips / Slot Combination	*TORX*® /Slot Combination	P-1	P-2	H-1	H-2	F*	Ø D	Ø Z
Press-In Style	0.9 (.036)v	~	~	~	4C-PS-M4-1P0-K000	4C-TS-M4-1P0-K000	0.5 (.02)	5.6 (.22)	16.3 (.64)	11.3 (.45)	0.7 (.03)	8 $^{+0}_{-0.08}$ (.315 $^{+0}_{-.003}$)	4.4 $^{+0.2}_{-0.1}$ (.173 $^{+.008}_{-.004}$)
					4C-PS-M4-2P0-K000	4C-TS-M4-2P0-K000	2 (.08)	7.1 (.28)					
Flare-In Style	1.5 (.060)	3.2 (.058)	0.4 (.016)	~	4C-PS-M4-1F1-K000	4C-TS-M4-1F1-K000	0.6 (.02)	5.6 (.22)	16.3 (.64)	11.3 (.45)	0.6 (.02)	6.8 $^{+0.08}_{-0.04}$ (.266 $^{+.005}_{-.0}$)	4.2 $^{+0.05}_{-0}$ (.165 $^{+.002}_{-.0}$)
					4C-PS-M4-2F1-K000	4C-TS-M4-2F1-K000	2.1 (.08)	7.1 (.28)					
Floating Style	0.8 (.031)	1.6 (.063)	3.1 (.122)	4 (.158)	4C-PS-M4-3T2-K000	4C-TS-M4-3T2-K000	3.8 (.15)	8.8 (.35)	16.2 (.64)	11.2 (.44)	2.3 (.09)	8.8 $^{+0.08}_{-0.03}$ (.346 $^{+.003}_{-.001}$)	~
					4C-PS-M4-4T2-K000	4C-TS-M4-4T2-K000	5.4 (.21)	10.4 (.41)					
	1.6 (.063)	2.4 (.094)	3.9 (.153)	4.8 (.190)	4C-PS-M4-3T3-K000	4C-TS-M4-3T3-K000	3.8 (.15)	8.8 (.35)					
					4C-PS-M4-4T3-K000	4C-TS-M4-4T3-K000	5.4 (.21)	10.4 (.41)					

M5 Thread Size

Installation Style	Outer Panel Dimensions		B	L	Part Number		Screw Projection Beyond Outer Surface of Panel		Knob Height†		Total Float	Panel Preparation	
	A Min.	A Max.			Phillips / Slot Combination	*TORX*® / Slot Combination	P-1	P-2	H-1	H-2	F*	Ø D	Ø Z
Press-In Style	0.9 (.036)†	~	~	~	4C-PS-M5-1P0-K000	4C-TS-M5-1P0-K000	0.4 (.2)	5.6 (.22)	16.4 (.65)	11.3 (.45)	0.8 (.03)	8 $^{+0}_{-0.08}$ (.315 $^{+0}_{-.003}$)	5.2 $^{+0.2}_{-0.1}$ (.205 $^{+.008}_{-.004}$)
					4C-PS-M5-2P0-K000	4C-TS-M5-2P0-K000	2 (.08)	7.2 (.28)					
Flare-In Style	1.5 (.06)	3.2 (.058)	0.4 (.016)	~	4C-PS-M5-1F1-K000	4C-TS-M5-1F1-K000	0.5 (.02)	5.6 (.22)	16.4 (.65)	11.3 (.45)	0.7 (.03)	6.8 $^{+0.08}_{-0.04}$ (.266 $^{+.005}_{-.0}$)	4.9 $^{+0.05}_{-0}$ (.191 $^{+.002}_{-.0}$)
					4C-PS-M5-2F1-K000	4C-TS-M5-2F1-K000	2.1 (.08)	7.2 (.28)					
Floating Style	0.8 (.031)	1.6 (.063)	3.1 (.122)	4 (.158)	4C-PS-M5-3T2-K000	4C-TS-M5-3T2-K000	3.7 (.15)	8.9 (.35)	16.3 (.64)	11.2 (.44)	2.3 (.09)	8.8 $^{+0.08}_{-0.03}$ (.346 $^{+.003}_{-.001}$)	~
					4C-PS-M5-4T2-K000	4C-TS-M5-4T2-K000	5.3 (.21)	10.5 (.41)					

Part Number

See table

To indicate color, change the last three digits of the part number. For knob style, K = knurled and N = smooth. For smooth knob change K to N. Example:

4C-PS-06-1P0-K000, black, knurled

4C-PS-06-1P0-N013, red, smooth

Part Number

See table

Specify Wing Knob:

(M3, Press-in, Flare-in only)

To indicate Wing Knob option, change K to W of the part number

Example:

4C-PH-M3-1P0-K000, Round Knob

4C-PH-M3-1P0-W000, Wing Knob

000
Black

008
Blue

013
Red

014
Green

Your Color
Contact Southco

Notes: *F indicates the maximum float in the unfastened position.
† For panels thinner than 0.9 (.036), contact Southco.

TORX® is a registered trademark of *CAMCAR* Innovations

Dimensions in millimeters (inch) unless otherwise stated

Recess Styles

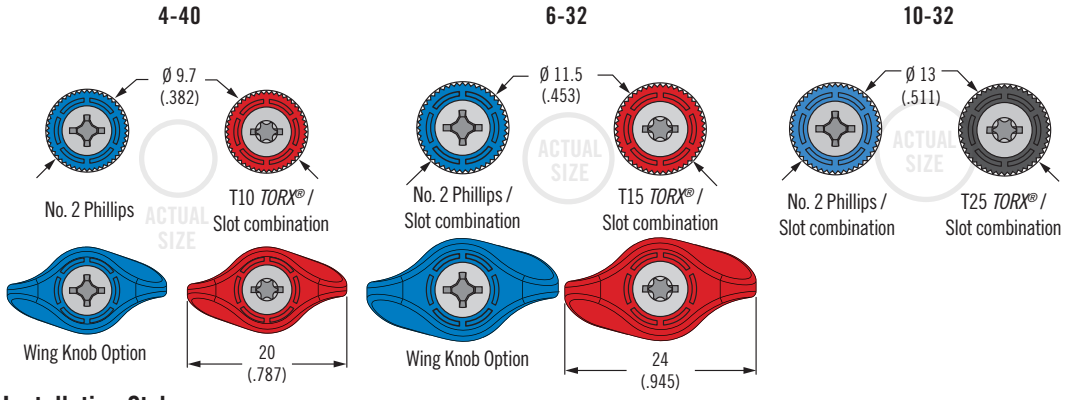

Installation Styles

4-40

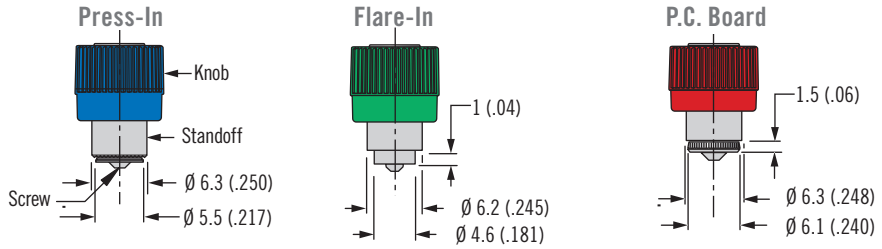

6-32

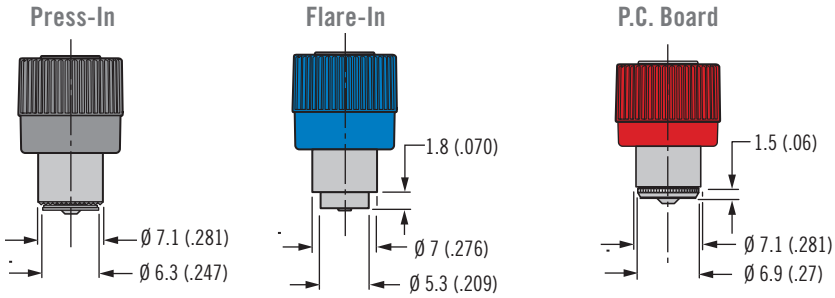

10-32

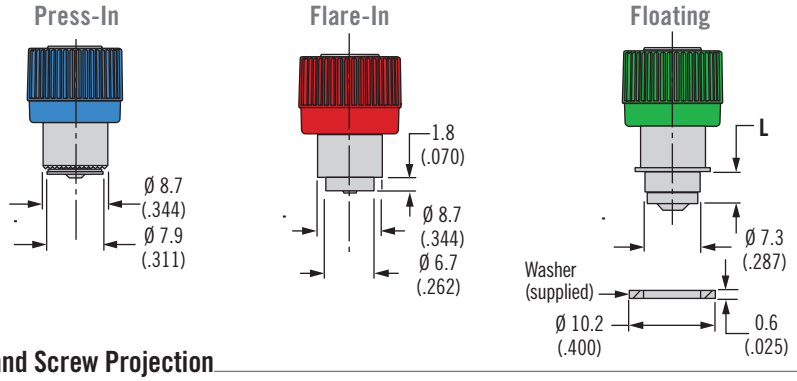

Knob Height and Screw Projection

(Press-in style shown)

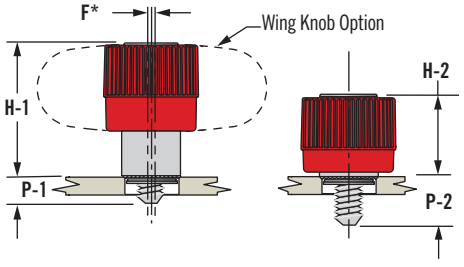

- **Designate access points with color**
- **Color match captive screws to your industrial design**
- **High strength screw for use with high torque drivers**
- **Knurled, smooth and wing knobs available**

Material and Finish

Knob: PC/ABS

Screw: Hardened carbon steel, zinc plate, chromate, plus sealer

Spring: 300 series stainless steel, passivated

Standoff:
Press-in: Carbon steel, zinc plate, chromate, plus sealer
PCB: Stainless steel
Flare-in and Floating: Aluminum, natural

Performance Details

Flammability Rating: UL94-V0

Installation Notes

See pages 546-547, 627

To ensure you receive *SOUTHCO*® quality parts, look for the segmented circle.

TORX® is a registered trademark of *CAMCAR* Innovations

4C Captive Screws

Prism series · 4-40, 6-32 and 10-32 thread size

4-40 Thread Size

Installation Style	Outer Panel Dimensions		B	Part Number		Screw Projection Beyond Outer Surface of Panel		Knob Height†		Total Float	Panel Preparation	
	A Min.	A Max.		Phillips Recess	*TORX*® / Slot Combination	P-1	P-2	H-1	H-2	F*	Ø D	Ø Z
Press-In Style	0.9† (.036)	~	~	4C-PH-04-1P0-K**000**	4C-TS-04-1P0-K**000**	0.8 (.03)	3.8 (.15)	11.5 (.45)	8.6 (.34)	0.7 (.03)	5.6 $^{+.04}_{-.04}$ (.219 $^{+.003}_{-0}$)	3.2 $^{+0.2}_{-0.1}$ (.125 $^{+.008}_{-.004}$)
				4C-PH-04-2P0-K**000**	4C-TS-04-2P0-K**000**	2.5 (.10)	5.3 (.21)					
P.C. Board Style	1.6 (.063)	~	~	4C-PH-04-1B0-K**000**	4C-TS-04-1B0-K**000**	1.5 (.06)	3.8 (.15)	10.9 (.43)	8.5 (.33)	0.7 (.03)	5.6 $^{+0.1}_{-0.05}$ (.219 $^{+.004}_{-.002}$)	3.2 $^{+0.2}_{-0.1}$ (.125 $^{+.008}_{-.004}$)
				4C-PH-04-2B0-K**000**	4C-TS-04-2B0-K**000**	3.3 (.13)	5.5 (.22)					
Flare-In Style	0.8 (.031)	1.5 (.059)	0.4 (.016)	4C-PH-04-1F1-K**000**	4C-TS-04-1F1-K**000**	0.8 (.03)	3.7 (.15)	11.5 (.45)	8.6 (.34)	0.7 (.03)	4.8 $^{+0.08}_{-0.05}$ (.187 $^{+.005}_{-.000}$)	3.0 $^{+0.2}_{-0.1}$ (.125 $^{+.008}_{-.004}$)
				4C-PH-04-2F1-K**000**	4C-TS-04-2F1-K**000**	2.5 (.10)	5.4 (.21)					

Part Number

See table

To indicate color, change the last three digits of the part number. For knob style, K = knurled and N = smooth. For smooth knob change K to N. Example:
4C-PS-06-1P0-K000, black, knurled
4C-PS-06-1P0-N013, red, smooth

000
Black

008
Blue

013
Red

014
Green

Your Color
Contact Southco

Part Number

See table

Specify Wing Knob:
(4-40 and 6-32, Press-in and Flare-in only)
To indicate Wing Knob option, change K to W of the part number
Example:
4C-PS-06-1P0-K000, Round Knob
4C-PS-06-1P0-W000, Wing Knob

Notes: *F indicates the maximum float in the unfastened position.
† For panels thinner than 0.9 (.036), contact Southco.

TORX® is a registered trademark of *CAMCAR* Innovations

Dimensions in millimeters (inch) unless otherwise stated

6-32 Thread Size

Installation Style	Outer Panel Dimensions		B	Part Number		Screw Projection Beyond Outer Surface of Panel		Knob Height†		Total Float	Panel Preparation	
	A Min.	A Max.		Phillips / Slot Combination	*TORX*® / Slot Combination	P-1	P-2	H-1	H-2	F*	Ø D	Ø Z
Press-In Style	0.9† (.036)	~	~	4C-PS-06-1P0-K000	4C-TS-06-1P0-K000	0.7 (.03)	5 (.20)	15.5 (.61)	11.3 (.44)	0.7 (.03)	6.4 +0.03 -0.05 (.250 +.001 -.002)	3.7 +0.2 -0.1 (.146 +.008 -.004)
				4C-PS-06-2P0-K000	4C-TS-06-2P0-K000	2.3 (.09)	6.6 (.26)					
	0.8 (.031)	1.6 (.063)	~	4C-AB-P-0740-K000	4C-BB-P-0740-K000	0.7 (.03)	4 (.16)	14.6 (.57)			5.8 +0.08 -0.00 (.228 +.003 -.000)	3.7 +0.2 -0.1 (.146 +.008 -.004)
				4C-AB-P-0750-K000	4C-BB-P-0750-K000		5 (.20)	15.6 (.61)				
				4C-AB-P-0760-K000	4C-BB-P-0760-K000		6 (.24)	16.6 (.65)				
				4C-AB-P-0770-K000	4C-BB-P-0770-K000		7 (.28)	17.6 (.69)				
				4C-AB-P-0740-W000	4C-BB-P-0740-W000		4 (.16)	14.6 (.57)				
				4C-AB-P-0750-W000	4C-BB-P-0750-W000		5 (.20)	15.6 (.61)				
P.C. Board Style	1.5 (.06)	~	~	4C-PS-06-1B0-K000	4C-TS-06-1B0-K000	1.7 (.07)	6.2 (.25)	14.5 (.57)	10 (.39)		6.4 ± 0.1 (.252 ± .004)	3.7 +0.2 -0.1 (.146 +.008 -.004)
Flare-In Style	1.5 (.059)	3.2 (.125)	0.4 (.016)	4C-PS-06-1F1-K000	4C-TS-06-1F1-K000	0.8 (.03)	5 (.20)	15.5 (.61)	11.3 (.44)		5.4 +0.1 -0.0 (.213 +.005 -.000)	3.7 +0.2 -0.1 (.146 +.008 -.004)
				4C-PS-06-2F1-K000	4C-TS-06-2F1-K000	2.3 (.09)	6.6 (.26)					
	0.8 (.031)	1.6 (.063)	0.2 (.008)	4C-AB-F-0740-K000	4C-BB-F-0740-K001	0.7 (.03)	4 (.16)	14.6 (.57)				
				4C-AB-F-0750-K000	4C-BB-F-0750-K000		5 (.20)	15.6 (.61)				
				4C-AB-F-0760-K000	4C-BB-F-0760-K000		6 (.24)	16.6 (.65)				
				4C-AB-F-0770-K000	4C-BB-F-0770-K000		7 (.28)	17.6 (.69)				
				4C-AB-F-0740-W000	4C-BB-F-0740-W000		4 (.16)	14.6 (.57)				
				4C-AB-F-0750-W000	4C-BB-F-0750-W000		5 (.20)	15.6 (.61)				

10-32 Thread Size

Installation Style	Outer Panel Dimensions		B	L	Part Number		Screw Projection Beyond Outer Surface of Panel		Knob Height†		Total Float	Panel Preparation	
	A Min.	A Max.			Phillips / Slot Combination	*TORX*® / Slot Combination	P-1	P-2	H-1	H-2	F*	Ø D	Ø Z
Press-In Style	0.9† (.036)	~	~	~	4C-PS-10-1P0-K000	4C-TS-10-1P0-K000	0.5 (.02)	5.6 (.22)	16.3 (.64)	11.3 (.45)	0.6 (.02)	8 +0 -0.08 (.315 +0 -.003)	5.2 +0.2 -0.1 (.205 +.008 -.004)
					4C-PS-10-2P0-K000	4C-TS-10-2P0-K000	2 (.08)	7.1 (.28)					
Flare-In Style	1.5 (.058)	3.2 (.125)	0.4 (.016)	1.8 (.070)	4C-PS-10-1F1-K000	4C-TS-10-1F1-K000	0.6 (.02)	5.6 (.22)		11.3 (.45)	0.6 (.02)	6.8 +0.08 -0.04 (.266 +.005 -.0)	4.9 +0.05 -0 (.191 +.002 -.0)
					4C-PS-10-2F1-K000	4C-TS-10-2F1-K000	2.1 (.08)	7.1 (.28)					
Floating Style	0.8 (.031)	1.6 (.063)	3.1 (.122)	4 (.158)	4C-PS-10-3T2-K000	4C-TS-10-3T2-K000	3.8 (.15)	8.8 (.35)		11.2 (.44)	2.3 (.09)	8.8 +0.08 -0.03 (.346 +.003 -.001)	~
					4C-PS-10-4T2-K000	4C-TS-10-4T2-K000	5.4 (.21)	10.4 (.41)					
	1.6 (.063)	2.4 (.094)	3.9 (.153)	4.8 (.190)	4C-PS-10-3T3-K000	4C-TS-10-3T3-K000	3.8 (.15)	8.8 (.35)					
					4C-PS-10-4T3-K000	4C-TS-10-4T3-K000	5.4 (.21)	10.4 (.41)					

(shown in table)

000
Black

008
Blue

013
Red

014
Green

Your Color
Contact Southco

Part Number

See table

Specify Wing Knob:
(4-40 and 6-32, Press-in and Flare-in only)
To indicate Wing Knob option, change K to W of the part number
Example:
4C-PS-06-1P0-K000, Round Knob
4C-PS-06-1P0-W000, Wing Knob

Notes: *F indicates the maximum float in the unfastened position.
† For panels thinner than 0.9 (.036), contact Southco.

TORX® is a registered trademark of *CAMCAR* Innovations

47 Captive Screws

Restricted access series · M4 and M5 thread size

- **Reduces risk of unauthorized access**
- **Meets UL-1950, IEC 950 and EN-60950**
- **Hand operation to secure with tool-only removal**

Material and Finish

Ferrule:
Press-in: Hardened carbon steel, zinc plate, chromate, plus sealer
Flare-in and Floating: Aluminum, natural

Knob: Aluminum, natural or black organic coating

Screw: Hardened carbon steel, zinc plate, chromate, plus sealer

Installation Notes

See pages 546-547, 627

Recess Styles

Slotted

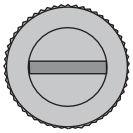

No. 2 Phillips

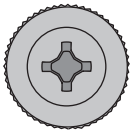

T25 *TORX*®

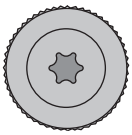

ACTUAL SIZE

Knob Height and Screw Projection

(Press-in style shown)

Unfastened

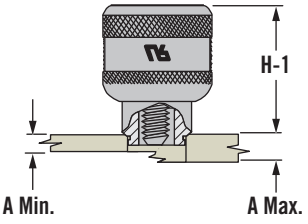

Unfastened

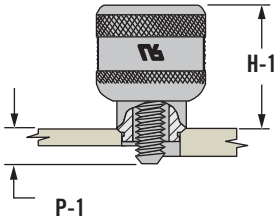

Fastened

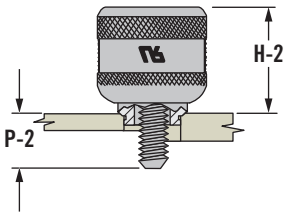

Installation Styles

Press-In Style

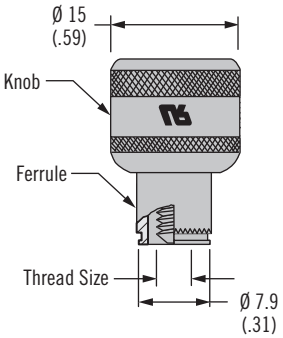

Flare-In Style

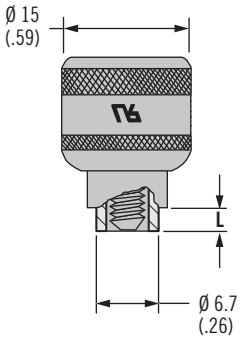

Floating Style

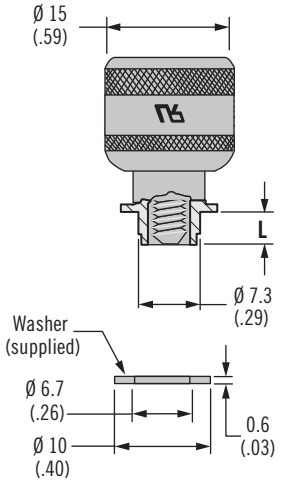

TORX® is a registered trademark of *CAMCAR* Innovations

Dimensions in millimeters (inch) unless otherwise stated

southco®

M4 Thread Size

Installation Style	Knob Height		Outer Panel Dimensions		Dimension B*	Flange Length L	Screw Projection Beyond Outer Surface of Panel		Part Number		
	H-1	H-2	A Min.	A Max.			P-1	P-2	Slotted Recess	Phillips Recess	*TORX*® Recess
Press-In Style	18.5 (.73)	14 (.55)	0.9 (.036)	~	~	~	0.7 (.03)	5.6 (.22)	47-90-301-22	47-90-321-22	47-90-341-22
							2.3 (.09)	7.2 (.28)	47-91-301-22	47-91-321-22	47-91-341-22
							3.8 (.15)	8.7 (.34)	47-92-301-22	47-92-321-22	47-92-341-22
							5.4 (.21)	10.3 (.41)	47-93-301-22	47-93-321-22	47-93-341-22
Flare-In Style	18 (.70)	13 (.51)	1.5 (.058)	3.2 (.125)	0.6 (.023)	1.8 (.07)	1.4 (.06)	6.2 (.24)	47-80-302-22	47-80-322-22	47-80-342-22
			3.2 (.125)	4.8 (.188)	1.6 (.062)	3.4 (.14)	3.1 (.12)	7.9 (.31)	47-80-304-22	47-80-324-22	47-80-344-22
			1.5 (.058)	3.2 (.125)	0.6 (.023)	1.8 (.07)	3.1 (.12)	7.9 (.31)	47-81-302-22	47-81-322-22	47-81-342-22
							4.1 (.16)	8.9 (.35)	47-82-302-22	47-82-322-22	47-82-342-22
							6.1 (.24)	10.9 (.43)	47-83-302-22	47-83-322-22	47-83-342-22
Floating Style	18 (.70)	14 (.55)	0.1 (.001)	0.8 (.031)	2.3 (.09)	3.2 (.13)	2.4 (.09)	7.2 (.28)	47-80-310-22	47-80-330-22	47-80-350-22
							3.4 (.13)	8.2 (.32)	47-81-310-22	47-81-330-22	47-81-350-22
							5.4 (.21)	10.2 (.40)	47-82-310-22	47-82-330-22	47-82-350-22
			0.8 (.031)	1.6 (.063)	3.1 (.12)	4 (.16)	2.4 (.09)	7.2 (.22)	47-80-311-22	47-80-331-22	47-80-351-22
							3.4 (.13)	8.2 (.32)	47-81-311-22	47-81-331-22	47-81-351-22
							5.4 (.21)	10.2 (.40)	47-82-311-22	47-82-331-22	47-82-351-22

M5 Thread Size

Press-In Style	18.5 (.73)	14 (.55)	0.9 (.036)	~	~	~	0.7 (.03)	5.6 (.22)	47-90-501-22	47-90-521-22	47-90-541-22
							2.3 (.09)	7.2 (.28)	47-91-501-22	47-91-521-22	47-91-541-22
							3.8 (.15)	8.7 (.34)	47-92-501-22	47-92-521-22	47-92-541-22
							5.4 (.21)	10.3 (.41)	47-93-501-22	47-93-521-22	47-93-541-22
Flare-In Style	18 (.70)	13 (.51)	1.5 (.058)	3.2 (.125)	0.6 (.023)	1.8 (.07)	1.4 (.06)	6.2 (.24)	47-80-502-22	47-80-522-22	47-80-542-22
			3.2 (.125)	4.8 (.188)	1.6 (.062)	3.4 (.14)	3.1 (.12)	7.9 (.31)	47-80-504-22	47-80-524-22	47-80-544-22
			1.5 (.058)	3.2 (.125)	0.6 (.023)	1.8 (.07)	3.1 (.12)	7.9 (.31)	47-81-502-22	47-81-522-22	47-81-542-22
							4.1 (.16)	8.9 (.35)	47-82-502-22	47-82-522-22	47-82-542-22
							6.1 (.24)	10.9 (.43)	47-83-502-22	47-83-522-22	47-83-542-22
			3.2 (.125)	4.8 (.188)	1.6 (.062)	3.4 (.14)	4.1 (.16)	8.9 (.35)	47-81-504-22	47-81-524-22	47-81-544-22
							6.1 (.24)	10.9 (.43)	47-82-504-22	47-82-524-22	47-82-544-22
Floating Style	18 (.70)	14 (.55)	0.1 (.001)	0.8 (.031)	2.3 (.09)	3.2 (.13)	2.4 (.09)	7.2 (.28)	47-80-510-22	47-80-530-22	47-80-550-22
							3.4 (.13)	8.2 (.32)	47-81-510-22	47-81-530-22	47-81-550-22
							5.4 (.21)	10.2 (.40)	47-82-510-22	47-82-530-22	47-82-550-22
			0.8 (.031)	1.6 (.063)	3.1 (.12)	4 (.16)	2.4 (.09)	7.2 (.28)	47-80-511-22	47-80-531-22	47-80-551-22
							3.4 (.13)	8.2 (.32)	47-81-511-22	47-81-531-22	47-81-551-22
							5.4 (.21)	10.4 (.40)	47-82-511-22	47-82-531-22	47-82-551-22
			1.6 (.063)	2.4 (.094)	3.9 (.15)	4.8 (.19)	3.4 (.15)	8.2 (.35)	47-80-512-22	47-80-532-22	47-80-552-22
							5.4 (.21)	10.2 (.40)	47-81-512-22	47-81-532-22	47-81-552-22

Part numbers in shaded rows (shown in table) are fully retracting in minimum panel thickness

To add a black finish, change the part number from the table as shown:

Change 2 to 6: 47-80-102-**2**2

47-80-102-**6**2

Part Number

See table

All screw part numbers shown in table are for a natural finish

For black finish minimums may apply

TORX® is a registered trademark of *CAMCAR* Innovations

Dimensions in millimeters (inch) unless otherwise stated

47 Captive Screws

Restricted access series · 6-32 and 10-32 thread size

- **Reduces risk of unauthorized access**
- **Meets UL-1950, IEC 950 and EN-60950**
- **Hand operation to secure with tool-only removal**

Material and Finish

Ferrule:
Press-in: Hardened carbon steel, zinc plate, chromate, plus sealer
Flare-in and Floating: Aluminum, natural

Knob: Aluminum, natural or black organic coating

Screw: Hardened carbon steel, zinc plate, chromate, plus sealer

Installation Notes

See pages 546-547, 627

Recess Styles

Slotted

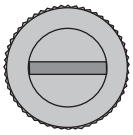

No. 2 Phillips

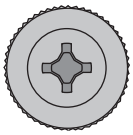

T15 *TORX*® - 6-32
T25 *TORX*® - 10-32

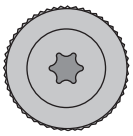

ACTUAL SIZE

Knob Height and Screw Projection

(Press-in style shown)

Unfastened

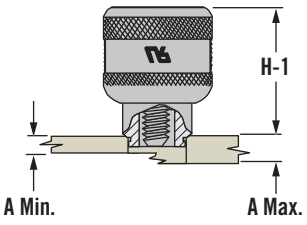

Unfastened

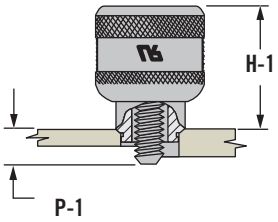

Fastened

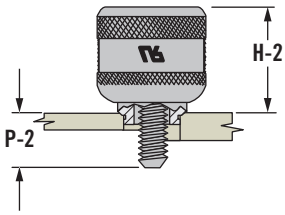

Installation Styles

Press-In Style

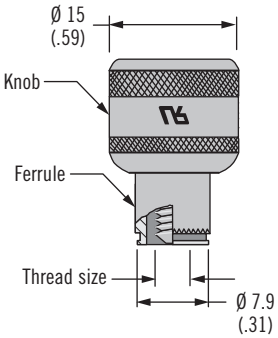

Flare-In Style

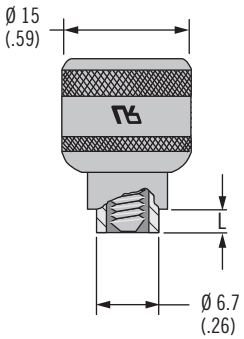

Floating Style

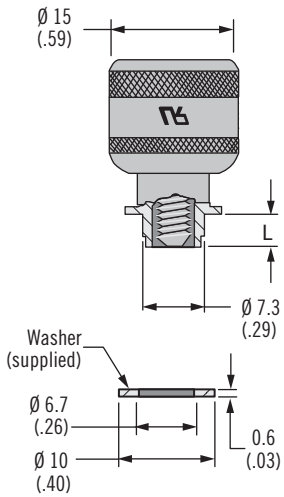

TORX® is a registered trademark of *CAMCAR* Innovations

Dimensions in millimeters (inch) unless otherwise stated

southco®

6-32 Thread Size

Installation Style	Knob Height†		Outer Panel Dimensions		Dimension B*	Flange Length L	Screw Projection Beyond Outer Surface Of Panel		Part Number		
	H-1	H-2	A Min.	A Max.			P-1	P-2	Slotted Recess	Phillips Recess	*TORX*® Recess
Press-In Style	18.5 (.73)	14 (.54)	0.9 (.036)	~	~	~	0.5 (.02)	5.3 (.21)	47-60-201-22	47-60-221-22	47-60-241-22
							2.3 (.09)	6.9 (.27)	47-61-201-22	47-61-221-22	47-61-241-22
							3.8 (.15)	8.3 (.33)	47-62-201-22	47-62-221-22	47-62-241-22
							5.3 (.21)	10.1 (.41)	47-63-201-22	47-63-221-22	47-63-241-22
Flare-In Style	18 (.70)	13 (.51)	1.5 (.058)	3.2 (.125)	0.6 (.023)	1.8 (.07)	1.4 (.06)	6.2 (.24)	47-10-202-22	47-10-222-22	47-10-242-22
			3.2 (.125)	4.8 (.189)	1.6 (.062)	3.4 (.14)	3.1 (.12)	7.9 (.31)	47-10-204-22	47-10-224-22	47-10-244-22
			1.5 (.058)	3.2 (.125)	0.6 (.023)	1.8 (.07)	3.1 (.12)	7.9 (.31)	47-11-202-22	47-11-222-22	47-11-242-22
							4.1 (.16)	8.9 (.35)	47-12-202-22	47-12-222-22	47-12-242-22
							6.1 (.24)	10.9 (.43)	47-13-202-22	47-13-222-22	47-13-242-22
			3.2 (.125)	4.8 (.189)	1.6 (.062)	3.4 (.14)	4.1 (.16)	8.9 (.35)	47-11-204-22	47-11-224-22	47-11-244-22
							6.1 (.24)	10.9 (.43)	47-12-204-22	47-12-224-22	47-12-244-22
Floating Style	18 (.70)	14 (.54)	0.1 (.001)	0.8 (.031)	2.3 (.09)	3.2 (.13)	2.4 (.09)	7.2 (.28)	47-10-210-22	47-10-230-22	47-10-250-22
							3.4 (.13)	8.2 (.32)	47-11-210-22	47-11-230-22	47-11-250-22
							5.4 (.21)	10.2 (.40)	47-12-210-22	47-12-230-22	47-12-250-22
			0.8 (.031)	1.6 (.063)	3.1 (.12)	4 (.16)	2.4 (.09)	7.2 (.22)	47-10-211-22	47-10-231-22	47-10-251-22
							3.4 (.13)	8.2 (.32)	47-11-211-22	47-11-231-22	47-11-251-22
							5.4 (.21)	10.2 (.40)	47-12-211-22	47-12-231-22	47-12-251-22
			1.6 (.063)	2.4 (.094)	3.9 (.15)	4.8 (.19)	3.4 (.13)	8.2 (.32)	47-10-212-22	47-10-232-22	47-10-252-22
							5.4 (.21)	10.2 (.40)	47-11-212-22	47-11-232-22	47-11-252-22

10-32 Thread Size

Installation Style	Knob Height†		Outer Panel Dimensions		Dimension B*	Flange Length L	Screw Projection Beyond Outer Surface Of Panel		Part Number		
	H-1	H-2	A Min.	A Max.			P-1	P-2	Slotted Recess	Phillips Recess	*TORX*® Recess
Press-In Style	18.5 (.73)	14 (.54)	0.9 (.036)	~	~	~	0.7 (.03)	5.6 (.22)	47-60-501-22	47-60-521-22	47-60-541-22
							2.3 (.09)	7.2 (.28)	47-61-501-22	47-61-521-22	47-61-541-22
							3.8 (.15)	8.7 (.34)	47-62-501-22	47-62-521-22	47-62-541-22
							5.4 (.21)	10.3 (.41)	47-63-501-22	47-63-521-22	47-63-541-22
Flare-In Style	18 (.70)	13 (.51)	1.5 (.058)	3.2 (.125)	0.6 (.023)	1.8 (.07)	1.4 (.06)	6.2 (.24)	47-10-502-22	47-10-522-22	47-10-542-22
			3.2 (.125)	4.8 (.189)	1.6 (.062)	3.4 (.14)	3.1 (.12)	7.9 (.31)	47-10-504-22	47-10-524-22	47-10-544-22
			1.5 (.058)	3.2 (.125)	0.6 (.023)	1.8 (.07)	3.1 (.12)	7.9 (.31)	47-11-502-22	47-11-522-22	47-11-542-22
							4.1 (.16)	8.9 (.35)	47-12-502-22	47-12-522-22	47-12-542-22
							6.1 (.24)	10.9 (.43)	47-13-502-22	47-13-522-22	47-13-542-22
			3.2 (.125)	4.8 (.189)	1.6 (.062)	3.2 (.14)	4.1 (.16)	8.9 (.35)	47-11-504-22	47-11-524-22	47-11-544-22
							6.1 (.24)	10.9 (.43)	47-12-504-22	47-12-524-22	47-12-544-22
Floating Style	18 (.70)	14 (.54)	0.1 (.001)	0.8 (.031)	2.3 (.09)	3.2 (.13)	2.4 (.09)	7.2 (.28)	47-10-510-22	47-10-530-22	47-10-550-22
							3.4 (.13)	8.2 (.32)	47-11-510-22	47-11-530-22	47-11-550-22
							5.4 (.21)	10.2 (.40)	47-12-510-22	47-12-530-22	47-12-550-22
			0.8 (.031)	1.6 (.063)	3.1 (.12)	4 (.16)	2.4 (.09)	7.2 (.28)	47-10-511-22	47-10-531-22	47-10-551-22
							3.4 (.13)	8.2 (.32)	47-11-511-22	47-11-531-22	47-11-551-22
							5.4 (.21)	10.2 (.40)	47-12-511-22	47-12-531-22	47-12-551-22
			1.6 (.063)	2.4 (.094)	3.9 (.15)	4.8 (.19)	3.4 (.13)	8.2 (.32)	47-10-512-22	47-10-532-22	47-10-552-22
							5.4 (.21)	10.2 (.40)	47-11-512-22	47-11-532-22	47-11-552-22

Part numbers in shaded rows (shown in table) are fully retracting in minimum panel thickness

To add a black finish, change the part number from the table as shown:

Change 2 to 6: 47-80-102-**2**2

47-80-102-**6**2

Part Number

See table

All screw part numbers shown in table are for a natural finish

For black finish minimums may apply

TORX® is a registered trademark of *CAMCAR* Innovations

Dimensions in millimeters (inch) unless otherwise stated

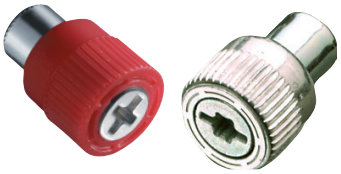

47/4C Captive Screws

Panel preparation and installation

Installation Notes

1. Prepare panel as shown. Top edge of hole should be sharp
2. Press captive screw into panel until ferrule is installed as shown

Installation closer to the panel edge requires a fixture to constrain the panel edges

Notes

Recommended minimum distance from edge of panel to centerline of hole is 1.5 x Ø D

Performance Details

Pullout force: 360 N (80 lbf)
Side load against unfastened knob: 200 N (45 lbf)

Installation Notes

1. Prepare panel as shown.
2. Use pilot lead-in to guide assembly into hole and press knurl into panel until ferrule shoulder contacts surface

Notes

Strength data based on drilled holes in G-10 P.C. Board

Installation Notes

1. Prepare panel as shown.
2. Install tool in suitable press. Only LIGHT pressure will be required
3. Insert screw assembly into prepared hole in panel
4. Place work under press, center tool over screw thread and flare ferrule into counter-sink in panel. Use LIGHT pressure

Installation Force:
1600 N (350 lbf) to 2500 N (550 lbf)
Installation force depends on thread size

Press-In Style

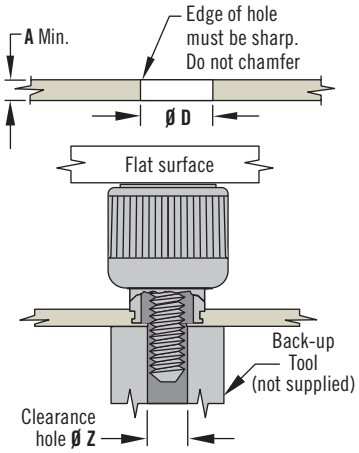

See page 627 for additional installation guidelines

Thread Size	Ø D	Clearance Hole Ø Z $^{+0.2}_{-0.1}$ ($^{+.008}_{-.004}$)
M3 or 4-40	$5.6\ ^{+0.03}_{-0.05}$ ($.219\ ^{+.003}_{-0}$)	3.2 (.125)
M3.5 or 6-32	$6.4\ ^{+0.03}_{-0.05}$ ($.250\ ^{+.003}_{-0}$)	3.7 (.146)
M4 or 8-32	$8\ ^{+0}_{-0.08}$ ($.315\ ^{+0}_{-.003}$)	4.4 (.173)
M5 or 10-32	$8\ ^{+0}_{-0.08}$ ($.315\ ^{+0}_{-.003}$)	5.2 (.205)
M6 or 1/4-20	$9.5\ ^{+0.1}_{-0}$ ($.375\ ^{+.003}_{-0}$)	6.2 (.260)

Notes: (47) For use in material hardness Rb85 or less, such as low carbon steels that are half hard or softer, stainless steels in the annealed condition and aluminum. (4C/52) For use in material hardness Rb65 or less, such as low carbon steels that are quarter hard or softer, stainless steels in the annealed condition and aluminum.

P.C. Board Style

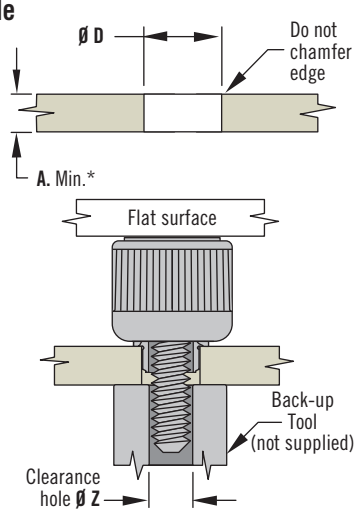

Thread Size	Ø D	Clearance Hole Ø Z $^{+0.2}_{-0.1}$ ($^{+.008}_{-.004}$)
M3 or 4-40	$5.6\ ^{+0.1}_{-0.05}$ ($.219\ ^{+.004}_{-.002}$)	3.2 (.125)
M3.5 or 6-32	6.4±1 (.252±.004)	3.7 (.146)

Flare-In Style

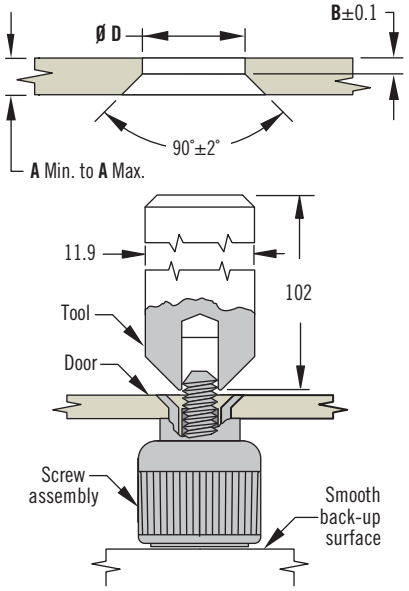

Thread Size	Ø D	Tool Part Number
M3 or 4-40	$4.8\ ^{+0.08}_{-0.05}$ ($.187\ ^{+.005}_{-0}$)	47-104
M3.5 or 6-32	$5.4\ ^{+0.1}_{-0}$ ($.213\ ^{+.005}_{-0}$)	47-106
M4 or 8-32	$6.8\ ^{+0.08}_{-0.04}$ ($.266\ ^{+.005}_{-0}$)	47-108
10-32	$6.8\ ^{+0.08}_{-0.04}$ ($.266\ ^{+.005}_{-0}$)	47-110
M5	$6.8\ ^{+0.08}_{-0.04}$ ($.266\ ^{+.005}_{-0}$)	47-115
M6 or 1/4-20	$8.2\ ^{+0.1}_{-0}$ ($.323\ ^{+.005}_{-0}$)	47-125

Dimensions in millimeters (inch) unless otherwise stated

southco®

Floating Style

Panel preparation 1

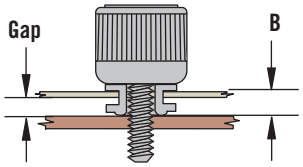

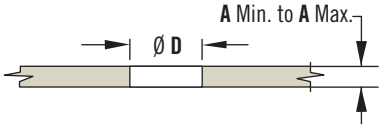

Panel preparation 2

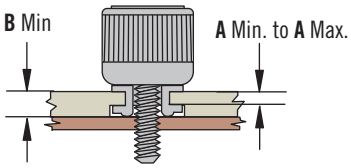

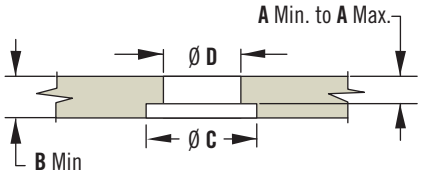

Thread Size	Tool Part Number
M3 or 4-40	47-04
M3.5 or 6-32	47-06
M4 or 8-32	47-08
M5	47-05
10-32	47-10
M6 or 1/4-20	47-25

Thread Size	Ø D $^{+.008}_{-0.03}$ ($^{+.003}_{-.001}$)	Counterbore Min. Ø C
M3 or 4-40	6.4 (.250)	9.4 (.375)
M3.5 or 6-32	7.2 (.283)	10.5 (.413)
M4 or 8-32	8.8 (.346)	12 (.469)
M5 or 10-32	8.8 (.346)	12 (.469)
M6 or 1/4-20	10.5 (.413)	13.5 (.531)

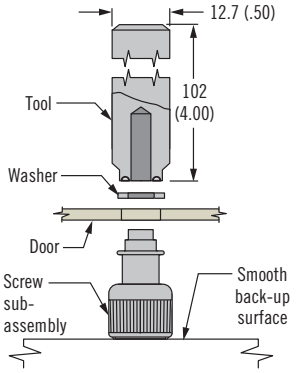

Snap-In Style

Panel preparation 1

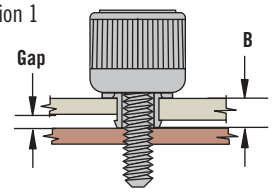

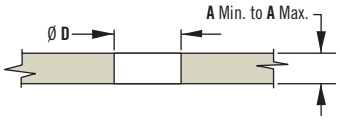

Panel preparation 2

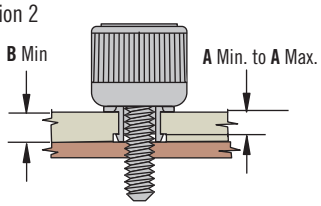

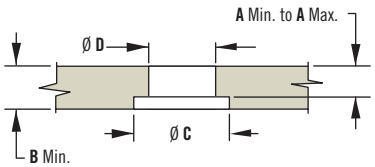

Thread Size	Ø D $^{+0}_{-0.1}$ (± .002)	Counterbore Min. Ø C
M3.5 or 6-32	6.4 (.250)	7.5 (.295)
M4 or 8-32	6.4 (.250)	7.5 (.295)
M5 or 10-32	6.4 (.250)	7.5 (.295)

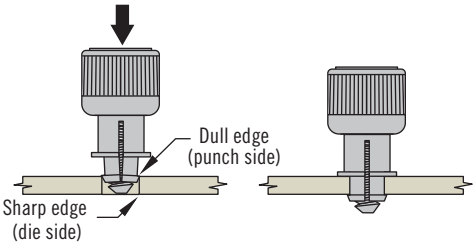

Installation Notes

Floating and Snap-in style:
Panel preparation 1:
Requires space between inner and outer panels.
Specify the fastener for panel thickness A to fall between the range A Minimum to A Maximum:
gap = B - A outer panel thickness

Panel preparation 2:
Counter bore the panel (B = Minimum panel thickness) to a thickness (A) between the range of A Minimum and A Maximum

Minimum bore depth = panel thickness - A Maximum

For gap = Ø, panel thickness must be ≥ to B value (before counterbore) for the given part number

Notes

B and A Maximum values are provided in the corresponding fastener selection tables for each part number

If holes are drilled, top edge of hole should be chamfered

47-SM Captive Screws

Styled knob series · Surface Mount Technology (SMT) Style

- **For installation to PC Board material utilizing surface mount technology**
- **Smooth knob meets UL-1950**
- **Designed for hand operation**
- **Spring ejected**
- **Variety of sizes, recesses**

Material and Finish

Ferrule: Steel, Tin plated

Knob:
Aluminum, natural

Screw: Hardened carbon steel, zinc plated, chromate, plus sealer

Internal spring: 300 series stainless steel passivated

Plug: Silicone rubber

Installation Notes

See page 551

To ensure you receive *SOUTHCO*® quality parts, look for the segmented circle

Part Number

See table

Recess Styles

TORX® / Slot Combination

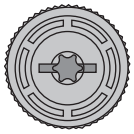

T10 *TORX*® / Slot Combination (M3,4-40)
T15 *TORX*® / Slot (6-32)

Phillips / Slot Combination

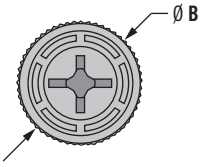

No. 1 Phillips / Slot Recess (M3,4-40)
No. 2 Phillips / Slot Recess (6-32)

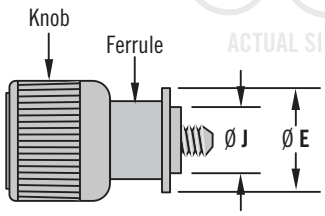

Knob Height and Screw Projection

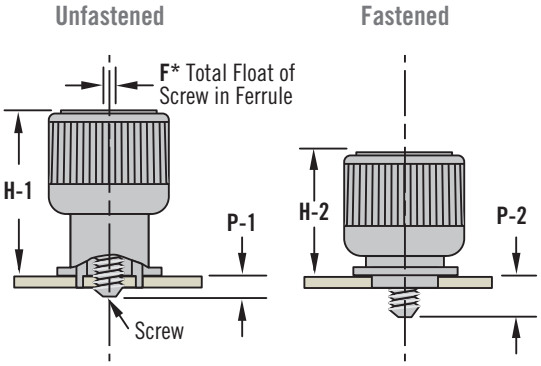

* Value represents float in unfastened position
Notes: P-1, P-2 Screw Projection measured from the top side of panel

PC Board Preparation

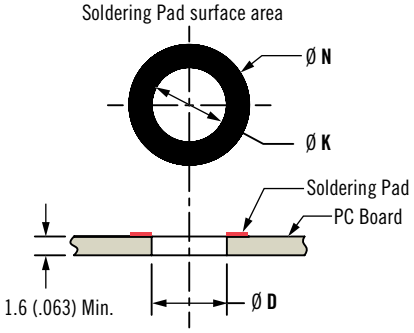

47 Captive Screws Styled knob series - SMT Style Screw as Shipped in Reel Pack

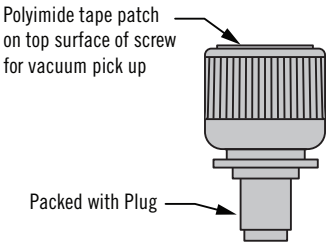

Thread Size	Part Number (Reel package shown)				H-1	H-2	P-1	P-2	ØB	ØJ	ØE	F*	Ø K	Ø N	Panel Preparation
	Knurled Head		Smooth Head												
	Phillips / Slotted	*TORX*® / Slotted	Phillips / Slotted	*TORX*® / Slotted											Ø D
M3 x 0.5	47-SM-3311-K-R	47-SM-3411-K-R	47-SM-3311-N-R	47-SM-3411-N-R	11.4 (.45)	8.4 (.33)	1.4 (.05)	4.4 (.17)	10.7 (.42)	5.5 (.217)	7.6 (.30)	0.7 (.03)	5.6 (.22)	8.6 (.34)	5.6 +0.08/-0 (.220 +.003/-.000)
	47-SM-3321-K-R	47-SM-3421-K-R	47-SM-3321-N-R	47-SM-3421-N-R			2.2 (.09)	5.2 (.20)							
4-40	47-SM-1311-K-R	47-SM-1411-K-R	47-SM-1311-N-R	47-SM-1411-N-R			1.4 (.05)	4.4 (.17)							
	47-SM-1321-K-R	47-SM-1421-K-R	47-SM-1321-N-R	47-SM-1421-N-R			2.2 (.09)	5.2 (.20)							
6-32	47-SM-2311-K-R	47-SM-2411-K-R	47-SM-2311-N-R	47-SM-2411-N-R	15.5 (.61)	10.7 (.42)	0.8 (.03)	5.6 (.22)	11.4 (.45)	6.2 (.244)	8.1 (.32)	0.7 (.03)	6.4 (.25)	10.2 (.40)	6.4 +0.08/-0 (.252 +.003/-.000)
	47-SM-2321-K-R	47-SM-2421-K-R	47-SM-2321-N-R	47-SM-2421-N-R			2.3 (.09)	7.1 (.28)							

TORX® is a registered trademark of *CAMCAR* Innovations

Dimensions in millimeters (inch) unless otherwise stated

4C-SM Captive Screws

Prism series · Surface Mount Technology (SMT) Style

Recess Styles

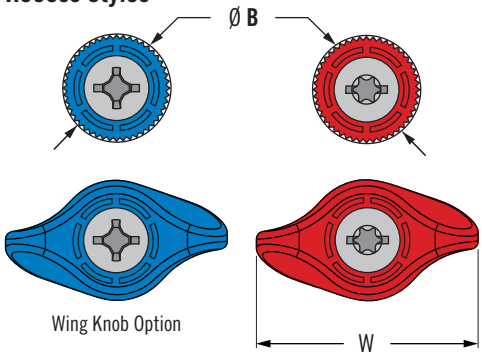

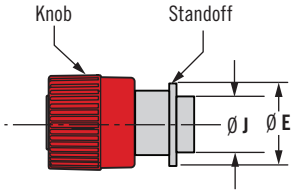

No. 2 Phillips Recess (M3,4-40)
No. 2 Phillips / Slot Recess (6-32)
T10 *TORX*® / Slot Combination (M3,4-40)
T15 *TORX*® / Slot Combination (6-32)

Knob Height and Screw Projection

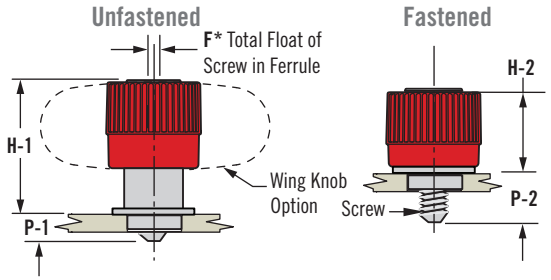

F* Value represents float in unfastened position
Notes: P-1, P-2 Screw Projection measured from the top side of panel

PC Board Preparation

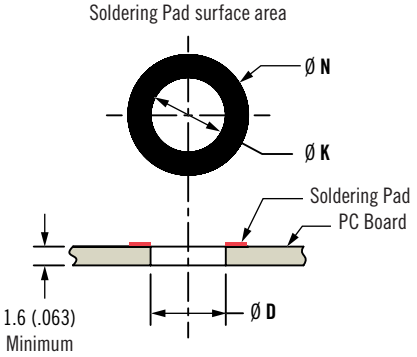

000 Black **008** Blue **013** Red **014** Green **Your Color** Contact Southco

Screw as Shipped in Reel Pack

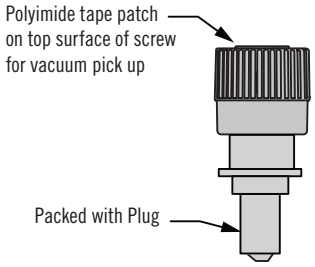

- **For installation to PC Board material utilizing surface mount technology**
- **Designate access points with color**
- **Color match captive screws to your industrial design**
- **High strength screw for use with high torque drivers**

Material and Finish

Standoff: Steel, Tin plated

Knob: High heat resistant plastic

Screw: Hardened carbon steel, zinc plated, chromate, plus sealer

Internal spring: 300 series stainless steel passivated

Plug: Silicone rubber

Installation Notes

See page 551

To ensure you receive *SOUTHCO*® quality parts, look for the segmented circle

Part Number

See table

Thread Size	Part Number (Reel package shown)				H-1	H-2	P-1	P-2	Ø B	Ø J	Ø E	F*	Ø K	Ø N	W	Panel Preparation
	Knurled Head		Smooth Head													
	Phillips	*TORX*® / Slotted	Phillips	*TORX*® / Slotted												Ø D
M3 x 0.5	4C-SM-3111-K000-R	4C-SM-3411-K000-R	4C-SM-3111-N000-R	4C-SM-3411-N000-R	10.8 (.43)	8.6 (.34)	1.5 (.06)	3.7 (.15)	9.7 (.38)	5.5 (.217)	7.6 (.30)	0.7 (.03)	5.6 (.22)	8.6 (.34)	20 (.7878)	5.6 +0.08/-0 (.220 +.003/-.000)
	4C-SM-3121-K000-R	4C-SM-3421-K000-R	4C-SM-3121-N000-R	4C-SM-3421-N000-R			3.3 (.13)	5.5 (.22)								
4-40	4C-SM-1111-K000-R	4C-SM-1411-K000-R	4C-SM-1411-N000-R	4C-SM-1411-N000-R			1.5 (.06)	3.7 (.15)								
	4C-SM-1121-K000-R	4C-SM-1421-K000-R	4C-SM-1421-N000-R	4C-SM-1421-N000-R			3.3 (.13)	5.5 (.22)								
	Phillips / Slotted	*TORX*®/Slotted	Phillips / Slotted	*TORX*®/Slotted												
6-32	4C-SM-2311-K000-R	4C-SM-2411-K000-R	4C-SM-2311-N000-R	4C-SM-2411-N000-R	16.3 (.64)	11.7 (.46)	0.1 (.004)	4.6 (.18)	11.4 (.45)	6.2 (.244)	8.1 (.32)	0.8 (.03)	6.4 (.25)	10.2 (.40)	24 (.945)	6.4 +0.08/-0 (.252 +.003/-.000)
	4C-SM-2321-K000-R	4C-SM-2421-K000-R	4C-SM-2321-N000-R	4C-SM-2421-N000-R			1.8 (0.7)	6.1 (.24)								

TORX® is a registered trademark of *CAMCAR* Innovations

52-SM Captive Screws

Miniature series · Surface Mount Technology (SMT) Style

- **For installation to PC Board material utilizing surface mount technology**
- **Smaller footprint for limited space applications**
- **Heat treated steel screw for optimum strength**

Material and Finish

Screw: Hardened carbon steel, zinc plated, chromate, plus sealer

Internal spring: 300 series stainless steel, passivated

Standoff: Steel, Tin plated

Plug: Silicone rubber

Installation Notes

See page 551

Part Number

See table

Recess Styles

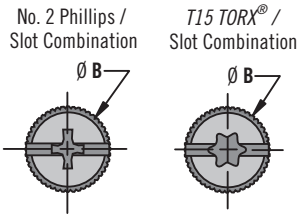

ACTUAL SIZE

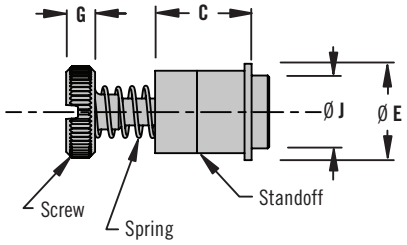

Screw Height and Screw Projection

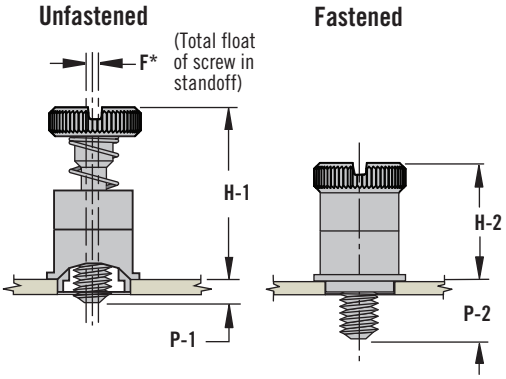

PC Board Preparation

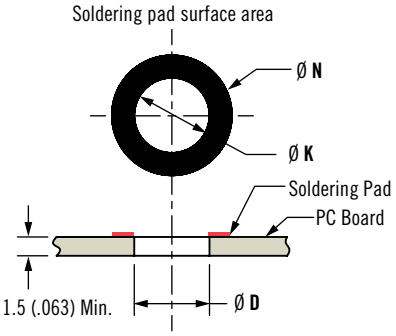

* Value represents float in unfastened position

Notes: P-1, P-2 Screw Projection measured from the top side of panel

52 Captive Screws Minature Series - SMT Style

Screw as Shipped in Reel Pack

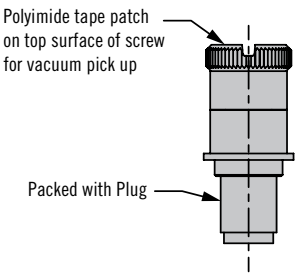

Thread Size	Part Number (Reel package shown)				H-1	H-2	P-1	P-2	Ø B Knurled Head	Ø B Smooth Head	Ø J	Ø E	C	G	F*	Ø K	Ø N	Panel Preparation Ø D
	Knurled Head		Smooth Head															
	Phillips / Slotted	TORX®/Slotted	Phillips / Slotted	TORX®/Slotted														
M3 x 0.5	52-SM-3311-K-R	52-SM-3411-K-R	52-SM-3311-N-R	52-SM-3411-N-R	14 (.55)	9.6 (.38)	0.8 (.03)	5.3 (.21)	7 (.28)	6.8 (.27)	5.5 (.217)	7.6 (.30)	7 (.28)	2.5 (.1)	0.5 (.02)	5.6 (.22)	8.6 (.34)	5.6 +0.08/-0 (.220 +.003/-.000)
	52-SM-3321-K-R	52-SM-3421-K-R	52-SM-3321-N-R	52-SM-3421-N-R			2.3 (.09)	6.8 (.27)										
4-40	52-SM-1311-K-R	52-SM-1411-K-R	52-SM-1311-N-R	52-SM-1411-N-R	14 (.55)	9.6 (.38)	0.8 (.03)	5.3 (.21)	7 (.28)	6.8 (.27)	5.5 (.217)	7.6 (.30)	7 (.28)	2.5 (.1)	0.5 (.02)			5.6 +0.08/-0 (.220 +.003/-.000)
	52-SM-1321-K-R	52-SM-1421-K-R	52-SM-1321-N-R	52-SM-1421-N-R			2.3 (.09)	6.8 (.27)										
6-32	52-SM-2311-K-R	52-SM-2411-K-R	52-SM-2311-N-R	52-SM-2411-N-R	15.7 (.62)	10.7 (.42)	0.7 (.028)	5.8 (.23)	7.9 (.31)	7.6 (.30)	6.2 (.244)	8.1 (.32)	8.1 (.32)	2.5 (.1)	0.8 (.03)	6.4 (.25)	10.2 (.40)	6.4 +0.08/-0 (.252 +.003/-.000)
	52-SM-2321-K-R	52-SM-2421-K-R	52-SM-2321-N-R	52-SM-2421-N-R			2.2 (.087)	7.4 (.29)										

TORX® is a registered trademark of *CAMCAR* Innovations

Dimensions in millimeters (inch) unless otherwise stated

southco®

Installation Guidelines

Southco Surface Mounted Technology (SMT) Captive Screws include installation and packaging features for installation onto PC Boards during the Reflow Process as a surface mounted device (SMD).

SMT product installation is offered on these Southco Captive Screws for 4-40, 6-32 and M3 thread sizes:

- **47 Styled Knob Series**
- **4C Prism Series**
- **52 Miniature Series**

Installation Features

Each Southco SMT style captive screw includes a polymide patch covering the screw head tool recess allowing for vacuum pick up during placement on the PC Board. The screw threads are protected from excess solder during the reflow process by a plug pre-assembled to the screw by Southco. The patch and plug are then removed after the final cool down phase.

Screw as Shipped in Reel or Tray Pack

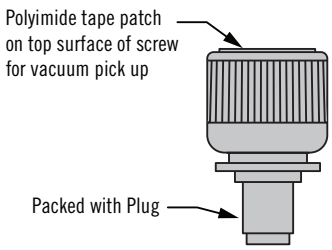

Preparing the PC Board to accept SMT Captive Screws

- See literature for optimum soldering pad surface area for the specific Southco Captive Screw being utilized

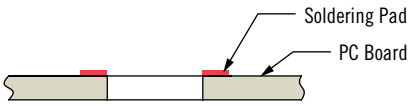

Packaging Features/Options

- Reel Pack

Reel Pack

Reflow Process

- Reflow of Solder
  - Pre-heat
  - Soak
  - Reflow
  - Cooling
- Cleaning
  - Remove excess solder paste

52 Captive Screws

Miniature series · Flare-in style

- **Smaller footprint for limited space applications**
- **Heat treated steel screw for optimum strength**

Material and Finish

Screw: Hardened carbon steel, zinc plated, chromate, plus sealer

Spring: 300 series stainless steel, passivated

Standoff: Aluminum natural

Installation tool: Hardened carbon steel, zinc plated, chromate, plus sealer

Installation Notes

1. Prepare panel as shown
2. Use light pressure to flare standoff, assuring parallel surfaces on the punch and installation tool

Part Number

See table

Recess Styles

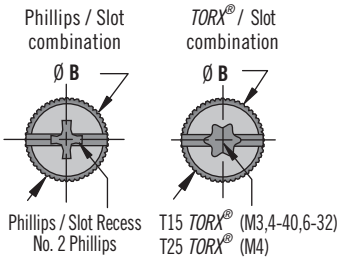

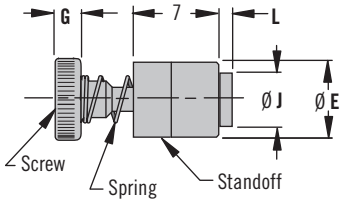

ACTUAL SIZE

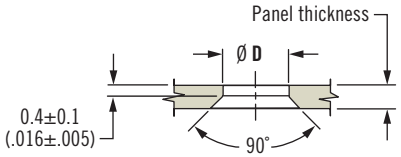

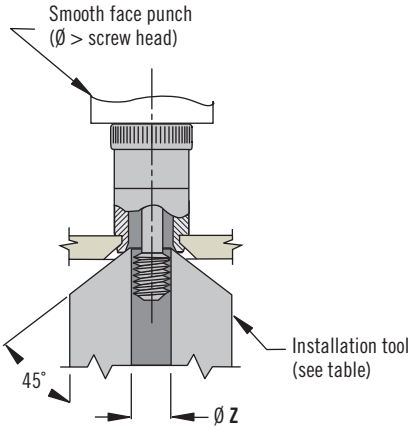

Knob Height and Screw Projection

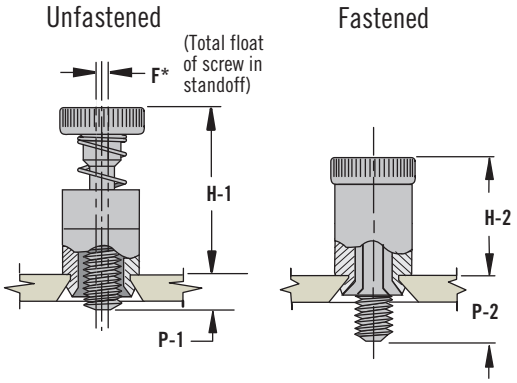

F* - Value represents float in unfastened position

Notes: P-1, P-2 measured from the top side of panel

Thread Size	Panel Thickness		Part Number				Ø B	Ø E	F	G	H-1	H-2	Ø J	L	P-1	P-2	Panel Preparation		Tool Part No.
			Knurled Head		Smooth Head												Ø D	Ø Z	
	Min.	Max.	Phillips / Slotted	TORX®/ Slotted	Phillips / Slotted	TORX®/ Slotted													
4-40	0.8 (.031)	2.4 (.094)	52-19-11-4	52-17-11-4	52-1A-11-4	52-18-11-4	7 (.28)	6.2 (.245)	0.5 (.018)	2.5 (.1)	14 (.55)	9.6 (.38)	4.6 (.183)	1 (.041)	0.8 (.031)	5.3 (.21)	4.75 $^{+0.08}_{-0}$ (.187 $^{+.003}_{-0}$)	3 (.120)	47-104
6-32	1.5 (.058)	3.2 (.125)	52-29-21-4	52-27-21-4	52-2A-21-4	52-28-21-4	8 (.31)	7 (.28)	0.7 (.028)	2.5 (.1)	15 (.59)	9.6 (.38)	5.3 (.209)	1.8 (.07)	1.8 (.07)	6.8 (.27)	5.41 $^{+0.08}_{-0}$ (.213 $^{+.003}_{-0}$)	3.6 (.141)	47-106
M3 x 0.5	0.8 (.031)	2.4 (.094)	52-39-11-4	52-37-11-4	52-3A-11-4	52-38-11-4	7 (.28)	6.2 (.245)	0.6 (.023)	2.5 (.1)	14 (.55)	9.6 (.38)	4.6 (.183)	1 (.041)	0.8 (.031)	5.3 (.21)	4.75 $^{+0.08}_{-0}$ (.187 $^{+.003}_{-0}$)	3 (.120)	47-104
M4 x 0.7	1.5 (.058)	3.2 (.125)	52-49-21-4	52-47-21-4	52-4A-21-4	52-48-21-4	9.4 (.37)	8.7 (.34)	0.7 (.028)	3 (.12)	15.2 (.60)	10.1 (.40)	6.7 (.26)	1.8 (.07)	1.8 (.07)	6.8 (.27)	6.76 $^{+0.1}_{-0.04}$ (.266 $^{+.005}_{-0}$)	4.2 (.166)	47-108

Note: Subtract .25 (.01) from **Ø B** for smooth head style.

TORX® is a registered trademark of *CAMCAR* Innovations

Dimensions in millimeters (inch) unless otherwise stated

southco®

52 Captive Screws

Miniature series · Press-in style

Recess Styles

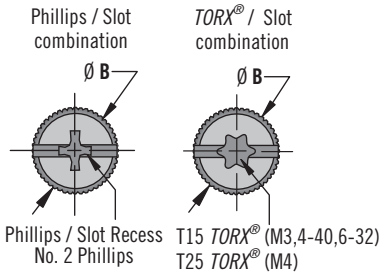

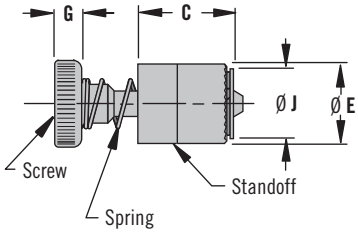

Knob Height and Screw Projection

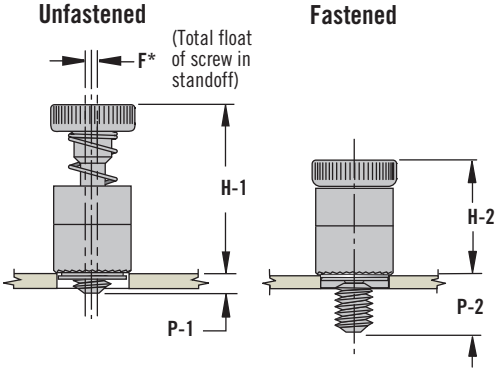

* Value represents float in unfastened position
Notes: P-1, P-2 measured from the top side of panel

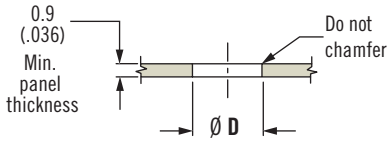

Notes: Recommended minimum distance from edge of panel to centerline of hole is 1.5 x Ø D for press-in version.

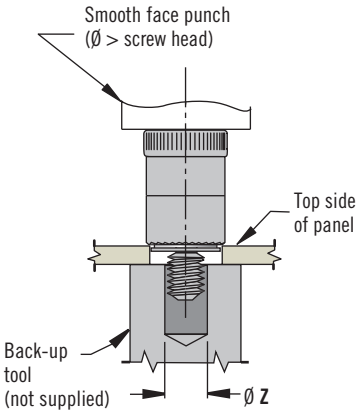

See page 627 for additional installation guidelines

- **Smaller footprint for limited space applications**
- **Heat treated steel screw for optimum strength**

Material and Finish

Screw: Hardened carbon steel, zinc plated, chromate, plus sealer

Spring: 300 series stainless steel, passivated

Standoff: Carbon steel, zinc plated, chromate, plus sealer

Installation Notes

For use in most aluminum or in low carbon steels that are 1/4 hard or softer

Part Number

See table

Thread Size	Part Number				Ø B	C	Ø E	F*	G	H-1	H-2	Ø J	P-1	P-2	Panel Preparation	
	Knurled Head		Smooth Head												Ø D	Ø Z
	Phillips / Slotted	TORX® / Slotted	Phillips / Slotted	TORX® / Slotted												
4-40	52-19-51-4	52-17-51-4	52-1A-51-4	52-18-51-4	7 (.28)	7.9 (.31)	6.4 (.25)	0.5 (.018)	2.5 (.1)	14 (.55)	9.6 (.38)	5.5 (.217)	0.9 (.036)	5.3 (.21)	5.56 $^{+0.08}_{-0}$ (.219 $^{+.003}_{-0}$)	3 (.120)
	52-19-53-4	52-17-53-4	52-1A-53-4	52-18-53-4									2.5 (.1)	6.8 (.27)		
6-32	52-29-51-4	52-27-51-4	52-2A-51-4	52-28-51-4	8 (.31)	8.6 (.34)	7 (.28)	0.7 (.028)	2.5 (.1)	15.5 (.61)	10.4 (.41)	6.3 (.247)	0.9 (.036)	6.1 (.24)	6.35 $^{+0.08}_{-0}$ (.250 $^{+.003}_{-0}$)	3.7 (.144)
	52-29-53-4	52-27-53-4	52-2A-53-4	52-28-53-4									2.5 (.1)	7.6 (.30)		
M3 X 0.5	52-39-51-4	52-37-51-4	52-3A-51-4	52-38-51-4	7 (.28)	7.9 (.31)	6.4 (.25)	0.6 (.023)	2.5 (.1)	14 (.55)	9.6 (.38)	5.5 (.217)	0.9 (.036)	5.3 (.21)	5.56 $^{+0.08}_{-0}$ (.219 $^{+.003}_{-0}$)	3.2 (.126)
	52-39-53-4	52-37-53-4	52-3A-53-4	52-38-53-4									2.5 (.1)	6.8 (.27)		
M4 X 0.7	52-49-51-4	52-47-51-4	52-4A-51-4	52-48-51-4	9.4 (.37)	8.6 (.34)	8.7 (.34)	0.7 (.028)	3 (.12)	16 (.63)	10.8 (.43)	7.9 (.31)	0.9 (.036)	6.1 (.24)	8 $^{+0}_{-0.08}$ (.315 $^{+0}_{-.003}$)	4.4 (.173)
	52-49-53-4	52-47-53-4	52-4A-53-4	52-48-53-4									2.5 (.1)	7.6 (.30)		

TORX® is a registered trademark of CAMCAR Innovations

Dimensions in millimeters (inch) unless otherwise stated

52 Overmold Captive Screws

Miniature series · Flare-in style

- **Smaller footprint for limited space applications**
- **Heat treated steel screw for optimum strength**
- **Designate access points with color**
- **Color match captive screws to your industrial design**

Material and Finish

Screw: Hardened carbon steel, zinc plated, chromate, plus sealer

Spring: 300 series stainless steel, passivated

Standoff: Aluminum natural

Knob: PC/ABS

Installation tool: Hardened carbon steel, zinc plated, chromate, plus sealer

Performance Details

Flamability Rating: UL94-V0

Installation Notes

1. Prepare panel as shown
2. Use light pressure to flare standoff, assuring parallel surfaces on the punch and installation tool

Part Number

See table

Recess Styles*

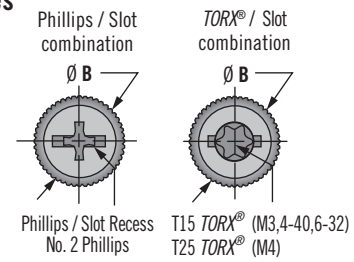

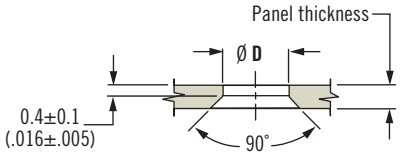

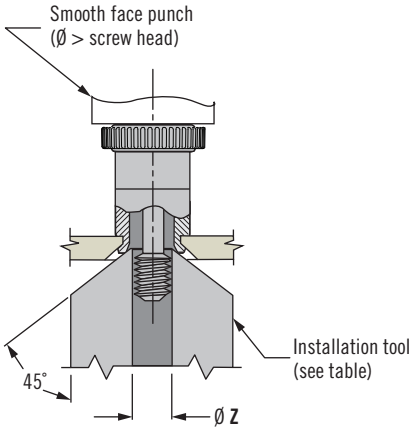

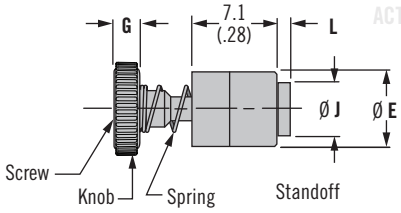

Knob Height and Screw Projection

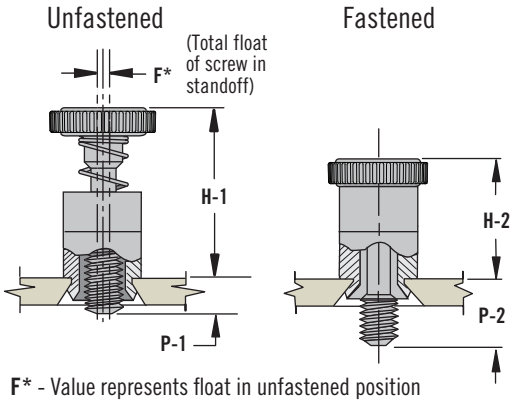

F* - Value represents float in unfastened position
Notes: P-1, P-2 measured from the top side of panel

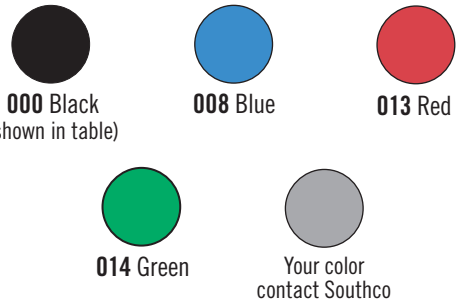

Specifying Color: To indicate color, change the last three digits of the part number
Example: 52-11-11-4-000 Black, 52-11-11-4-013 Red

Thread Size	Panel Thickness		Part Number				B Knurled Head	B Smooth Head	Ø E	F	G	H-1	H-2	Ø J	L	P-1	P-2	Panel Preparation		Tool Part No.
			Knurled Head		Smooth Head													Ø D	Ø Z	
	Min.	Max.	Phillips / Slotted	TORX®/ Slotted	Phillips / Slotted	TORX®/ Slotted														
4-40	0.8 (.031)	2.4 (.094)	52-11-11-4-000 *	52-15-11-4-000 *	52-13-11-4-000 *	52-16-11-4-000 *	8.1 (.32)	7.8 (.31)	6.2 (.245)	0.5 (.018)	2.5 (.1)	14 (.55)	9.6 (.38)	4.6 (.183)	1 (.041)	0.8 (.031)	5.3 (.21)	$4.75^{+0.08}_{-0}$ ($.187^{+.003}_{-0}$)	3 (.120)	47-104
6-32	1.5 (.058)	3.2 (.125)	52-29-21-4-000	52-27-21-4-000	52-2A-21-4-000	52-28-21-4-000	8.8 (.35)	8.5 (.33)	7 (.28)	0.7 (.028)	2.5 (.1)	15 (.59)	9.6 (.38)	5.3 (.209)	1.8 (.07)	1.8 (.07)	6.8 (.27)	$5.41^{+0.08}_{-0}$ ($.213^{+.003}_{-0}$)	3.6 (.141)	47-106
M3 x 0.5	0.8 (.031)	2.4 (.094)	52-31-11-4-000 *	52-35-11-4-000*	52-33-11-4-000 *	52-36-11-4-000*	8.1 (.32)	7.8 (.31)	6.2 (.245)	0.6 (.023)	2.5 (.1)	14 (.55)	9.6 (.38)	4.6 (.183)	1 (.041)	0.8 (.031)	5.3 (.21)	$4.75^{+0.08}_{-0}$ ($.187^{+.003}_{-0}$)	3 (.120)	47-104
M4 x 0.7	1.5 (.058)	3.2 (.125)	52-49-21-4-000	52-45-21-4-000 *	52-4A-21-4-000	52-46-21-4-000 *	10.3 (.41)	10 (.39)	8.7 (.34)	0.7 (.028)	3 (.12)	15.2 (.60)	10 (.40)	6.7 (.26)	1.8 (.07)	1.8 (.07)	6.8 (.27)	$6.76^{+0.1}_{-0}$ ($.266^{+.005}_{-0}$)	4.2 (.166)	47-108

*Part Numbers not available with combination head styles; Phillips or TORX® only

TORX® is a registered trademark of CAMCAR Innovations

Dimensions in millimeters (inch) unless otherwise stated

52 Overmold Captive Screws

Miniature series · Press-in style

Recess Styles*

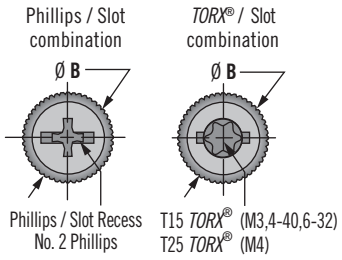

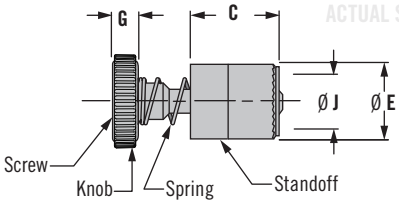

Knob Height and Screw Projection

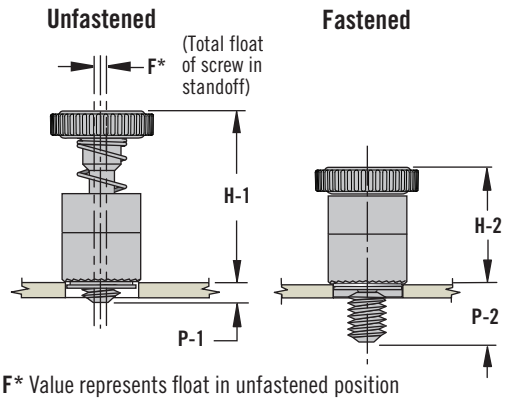

F* Value represents float in unfastened position
Notes: P-1, P-2 measured from the top side of panel

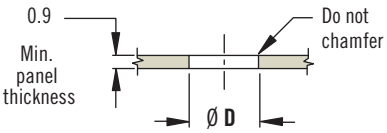

Notes: Recommended minimum distance from edge of panel to centerline of hole is 1.5 x Ø D for press-in version.

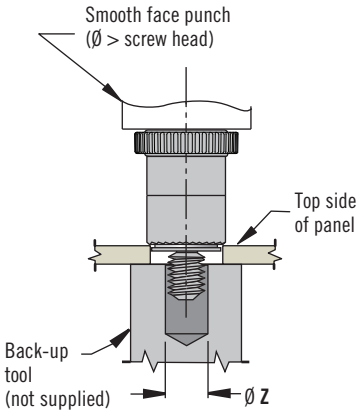

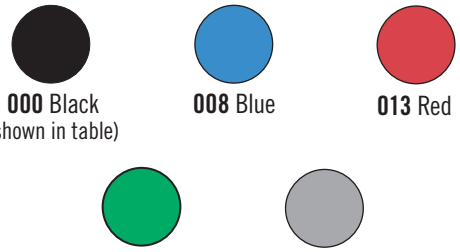

Specifying Color: To indicate color, change the last three digits of the part number
Example: 52-11-11-4-000 Black, 52-11-11-4-013 Red

Visit www.southco.com for additional installation guidelines

- **Smaller footprint for limited space applications**
- **Heat treated steel screw for optimum strength**
- **Designate access points with color**
- **Color match captive screws to your industrial design**

Material and Finish

Screw: Hardened carbon steel, zinc plated, chromate, plus sealer

Spring: 300 series stainless steel, passivated

Standoff: Carbon steel, zinc plated, chromate, plus sealer

Knob: PC/ABS

Performance Details

Flamability Rating: UL94-V0

Installation Notes

For use in most aluminum or in low carbon steels that are 1/4 hard or softer. Visit www.southco.com for more information.

Part Number

See table

Thread Size	Part Number				B Knurled Head	B Smooth Head	C	Ø E	F*	G	H-1	H-2	Ø J	P-1	P-2	Panel Preparation	
	Knurled Head		Smooth Head													Ø D	Ø Z
	Phillips / Slotted	TORX® / Slotted	Phillips / Slotted	TORX® / Slotted													
4-40	52-11-51-4-000*	52-15-51-4-000*	52-13-51-4-000*	52-16-51-4-000*	8.1 (.32)	7.8 (.31)	7.9 (.31)	6.4 (.25)	0.5 (.018)	2.5 (.1)	14 (.55)	9.6 (.38)	5.5 (.217)	0.9 (.036)	5.3 (.21)	5.56 $^{+0.08}_{-0}$ (.219 $^{+0}_{-.003}$)	3 (.120)
	52-11-53-4-000*	52-15-53-4-000*	52-13-53-4-000*	52-16-53-4-000*										2.5 (.1)	6.8 (.27)		
6-32	52-29-51-4-000	52-27-51-4-000	52-2A-51-4-000	52-28-51-4-000	8.8 (.35)	8.5 (.33)	8.6 (.34)	7 (.28)	0.7 (.028)	2.5 (.1)	15.5 (.61)	10.4 (.41)	6.3 (.247)	0.9 (.036)	6.1 (.24)	6.35 $^{+0.03}_{-0.00}$ (.250 $^{+0}_{-.003}$)	3.7 (.144)
	52-29-53-4-000	52-27-53-4-000	52-2A-53-4-000	52-28-53-4-000										2.5 (.1)	7.6 (.30)		
M3 X 0.5	52-31-51-4-000*	52-35-51-4-000*	52-33-51-4-000*	52-36-51-4-000*	8.1 (.32)	7.8 (.31)	7.9 (.31)	6.4 (.25)	0.6 (.023)	2.5 (.1)	14 (.55)	9.6 (.38)	5.5 (.217)	0.9 (.036)	5.3 (.21)	5.56 $^{+0.08}_{-0}$ (.219 $^{+0.003}_{-.000}$)	3.2 (.126)
	52-31-53-4-000*	52-35-53-4-000*	52-33-53-4-000*	52-36-53-4-000*										2.5 (.1)	6.8 (.27)		
M4 X 0.7	52-49-51-4-000	52-45-51-4-000*	52-4A-51-4-000	52-46-51-4-000*	10.3 (.41)	10 (.39)	8.6 (.34)	8.7 (.34)	0.7 (.028)	3 (.12)	16 (.63)	10.8 (.43)	7.9 (.31)	0.9 (.036)	6.1 (.24)	8 $^{+0}_{-0.08}$ (.315 $^{+0}_{-.003}$)	4.4 (.173)
	52-49-53-4-000	52-45-53-4-000*	52-4A-53-4-000	52-46-53-4-000*										2.5 (.1)	7.7 (.30)		

Note:*Part Numbers not available with combination head styles; Phillips or TORX® only

TORX® is a registered trademark of CAMCAR Innovations

52 Captive Screws

Miniature low profile series · Press-in style

- **Low profile for limited space application**
- **Heat treated steel screw for optimum strength**
- **Designate access points with color**
- **Color match captive screws to your industrial design**

Material and Finish

Screw: Hardened carbon steel, zinc plated, chromate, plus sealer

Spring: 300 series stainless steel, passivated

Standoff: Carbon steel, zinc plated, chromate, plus sealer

Prism: PC/ABS

Performance Details

Flamability Rating: UL94-V0

Installation Notes

For use in most aluminum or low carbon steels that are 1/4 hard or softer. Visit www.southco.com for more information.

Part Number

See table

Recess Styles

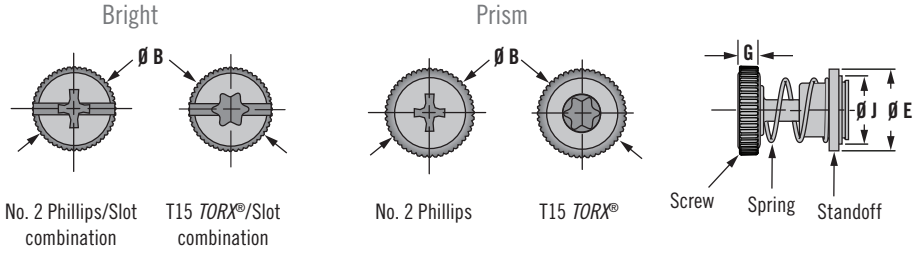

Knob Height and Screw Projection

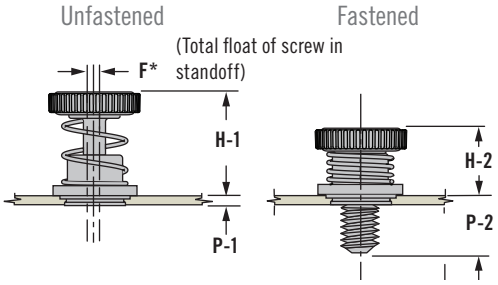

F* - Value represents float in unfastened position
Notes: P-1, P-2 measured from the top side of panel

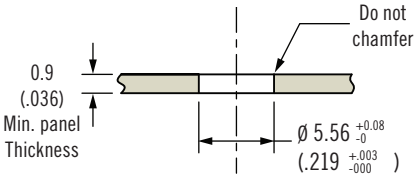

Notes: Recommended minimum distance from edge of panel to centerline of hole is 1.5 x Ø for press-in version.

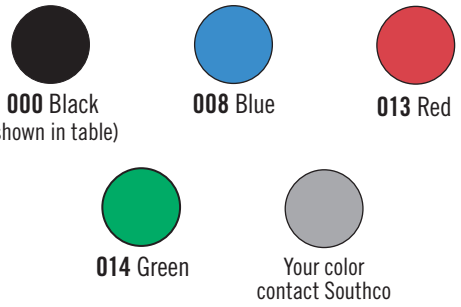

Specifying Color: To indicate color, change the last three digits of the part number
Example: 52-A11-51-4-000 Black, 52-A11-51-4-013 Red

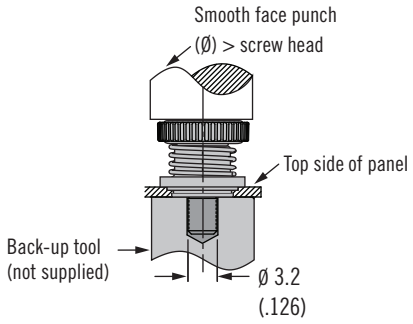

Visit www.southco.com for additional installation guidelines

Color/ Appearance	Thread Size	Part Number						H-1	H-2	P-1	P-2	Ø J	Ø E	G	F*
		Knurled Head			Smooth Head										
		Phillips / Slotted	TORX®/ Slotted	Ø B	Phillips / Slotted	TORX®/ Slotted	Ø B								
Bright	4-40	52-A19-51-4	52-A17-51-4	7	52-A1A-51-4	52-A18-51-4	6.75	9	6	0.9	3.9	6.35	7.6	1.7	0.5
	M3 x 0.5	52-A39-51-4	52-A37-51-4	(.28)	52-A3A-51-4	52-A38-51-4	(.27)	(.36)	(.24)	(.04)	(.17)	(.25)	(.3)	(.07)	(.02)
		Phillips	TORX®	Ø B	Phillips	TORX®	Ø B								
Prism (black shown)	4-40	52-A11-51-4-000	52-A15-51-4-000	8.1	52-A13-51-4-000	52-A16-51-4-000	7.8	9.5	6.2	0.9	3.9	6.35	7.6	2.2	0.5
	M3 x 0.5	52-A31-51-4-000	52-A35-51-4-000	(.32)	52-A33-51-4-000	52-A36-51-4-000	(.31)	(.37)	(.26)	(.04)	(.17)	(.25)	(.3)	(.09)	(.02)

TORX® is a registered trademark of CAMCAR Innovations

Dimensions in millimeters (inch) unless otherwise stated

Recess Styles

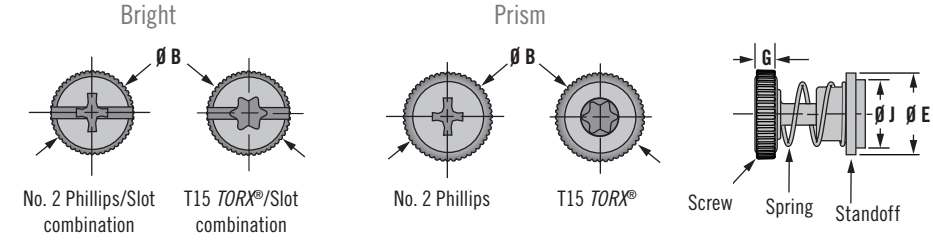

Knob Height and Screw Projection

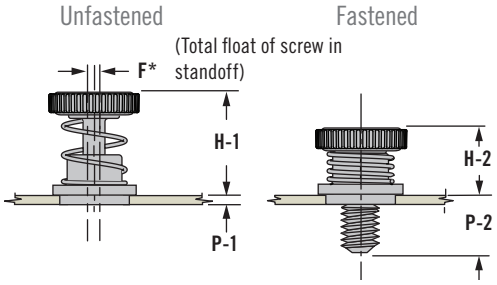

F* Value represents float in unfastened position
Notes: P-1, P-2 measured from the top side of panel

PC Board Preparation

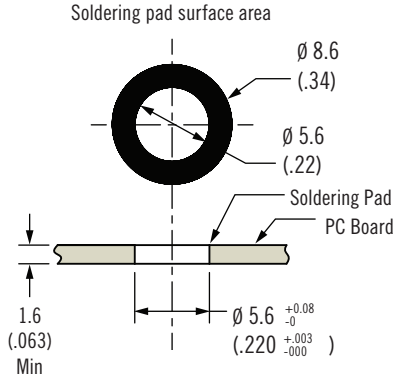

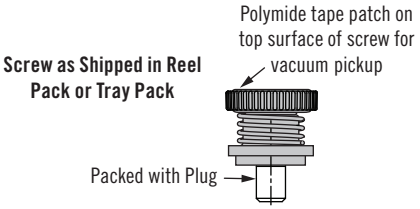

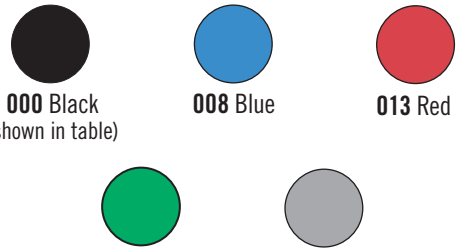

Specifying Color: To indicate color, change the last three digits of the part number
Example: 52-SM-A1111-K000-R, 52-SM-A1111-K013-R

Visit www.southco.com for additional installation guidelines

Specify Package -SMT Style
Indicate package option with last digit of the part number
Example
52-SM-A1311-K-**R**: Reel Package (as shown in table)
52-SM-A1311-K-**T**: Tray Package

- **For installation to PC Board material utilizing surface mount technology**
- **Heat treated steel screw for optimum strength**
- **Designate access points with color**
- **Color match captive screws to your industrial design**

Material and Finish
Screw: Hardened carbon steel, zinc plated, chromate, plus sealer
Spring: 300 series stainless steel, passivated
Standoff: Carbon steel, tin plated, chromate, plus sealer
Prism: High heat resistant plastic

Performance Details
Flamability Rating: UL94-V0

Installation Notes
Visit www.southco.com for additional installation guidelines

Part Number
See table

Color/ Appearance	Thread Size	Part Number						H-1	H-2	P-1	P-2	Ø J	Ø E	G	F*
		Knurled Head			Smooth Head										
		Phillips / Slotted	TORX®/ Slotted	Ø B	Phillips / Slotted	TORX®/ Slotted	Ø B								
Bright	4-40	52-SM-A1311-K-R	52-SM-A1411-K-R	7	52-SM-A1311-N-R	52-SM-A1411-N-R	6.75	8.4	5.4	1.5	4.5	5.5	7.6	1.7	0.5
	M3 x 0.5	52-SM-A3311-K-R	52-SM-A3411-K-R	(.28)	52-SM-A3311-N-R	52-SM-A3411-N-R	(.27)	(.33)	(.21)	(.06)	(.18)	(.22)	(.3)	(.07)	(.02)
		Phillips	TORX®	Ø B	Phillips	TORX®	Ø B								
Prism (black shown)	4-40	52-SM-A1111-K000-R	52-SM-A1211-K000-R	8.1	52-SM-A1111-N000-R	52-SM-A1211-N000-R	7.8	8.9	5.9	1.5	4.5	5.5	7.6	2.2	0.5
	M3 x 0.5	52-SM-A3111-K000-R	52-SM-A3211-K000-R	(.32)	52-SM-A3111-N000-R	52-SM-A3211-N000-R	(.31)	(.35)	(.23)	(.06)	(.18)	(.22)	(.3)	(.09)	(.02)

TORX® is a registered trademark of *CAMCAR* Innovations

47/4C Captive Screws

ATCA captive screws

- **M3 thread**
- **No. 2 Phillips recess**
- **Color match available**

Material and Finish

Screw, ferrule and internal spring stainless steel, knob aluminum or PC/ABS

Performance Details

Flammability rating: UL94-V0
ATCA R3.0 compliant screw

Installation Notes

Please refer to installation drawings on www.southco.com for reference on dimensions **B***, **Ø D*** and **Ø Z***

F* indicates maximum float in the unfastened position

Part Number

See table

Specifying Color:
To indicate color, change the last three digits of the part number.
Example:
47-99-945-1P0-K000, black

47-99-945-1P0-K013, red

Metal Version

ATCA

ACTUAL SIZE

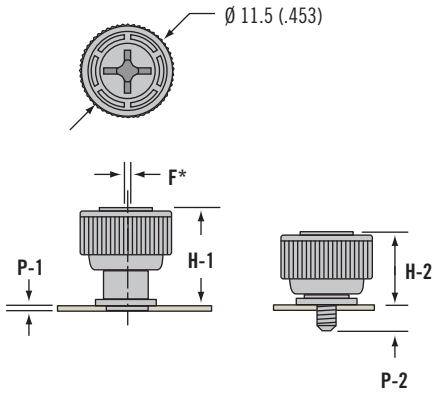

Overmolded Version

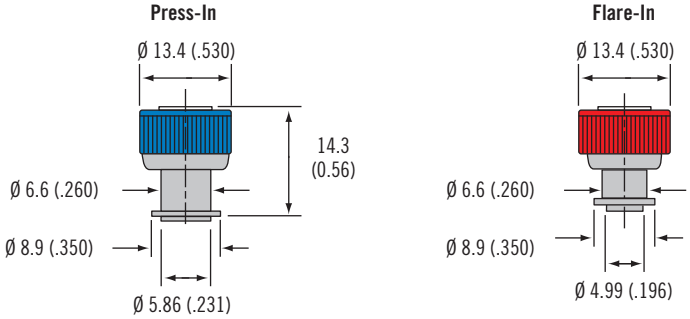

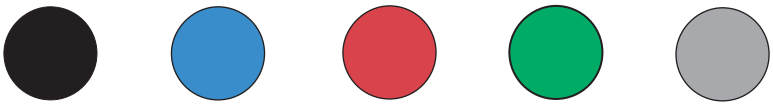

000 Black | 008 Blue | 013 Red | 014 Green | Your color (contact Southco)

Series	Installation Method	Panel Thickness			Part Number	H-1	H-2	P-1	P-2	F*	Panel Preparation	
		A Min.	A Max.	B*	No. 2 Phillips						Ø D*	Ø Z*
ATCA compliant (Metal Version)	Press-in	0.9 (.036)	~	~	47-99-945-1P0	14.3 (.56)	10.1 (.40)	1.0 (.39)	5.0 (.20)	1 (.039)	5.95 ±0.04 (.234±.002)	$3.2^{+0.2}_{-0.1}$ ($.125^{+.008}_{-.004}$)
	Flare-in	0.8 (.031)	1.5 (.060)	0.4 (.016)	47-99-944-1F1	14.3 (.56)	10.1 (.40)	1.0 (.39)	5.0 (.20)	1 (.039)	$5.1^{+0.1}_{-0}$ ($.20^{+.004}_{-0}$)	$3.0^{+0.1}_{-0}$ ($.118^{+.004}_{-.000}$)
ATCA compliant (Overmolded Version)	Press-in	0.9 (.036)	~	~	47-99-945-1P0-K000	14.3 (.56)	10.1 (.40)	1.0 (.39)	5.0 (.20)	1 (.039)	5.95 ±0.04 (.234±.002)	$3.2^{+0.2}_{-0.1}$ ($.125^{+.008}_{-.004}$)
	Flare-in	0.8 (.031)	1.5 (.060)	0.4 (.016)	47-99-944-1F1-K000	14.3 (.56)	10.1 (.40)	1.0 (.039)	5.0 (.20)	1 (.039)	$5.1^{+0.1}_{-0}$ ($.20^{+.004}_{-0}$)	$3.0^{+0.1}_{-0}$ ($.118^{+.004}_{-.000}$)

Dimensions in millimeters (inch) unless otherwise stated

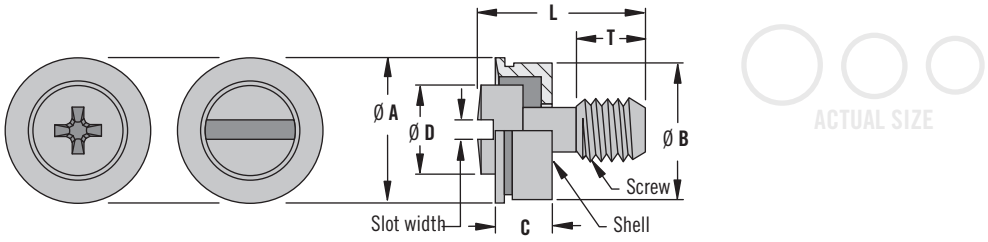

Installation

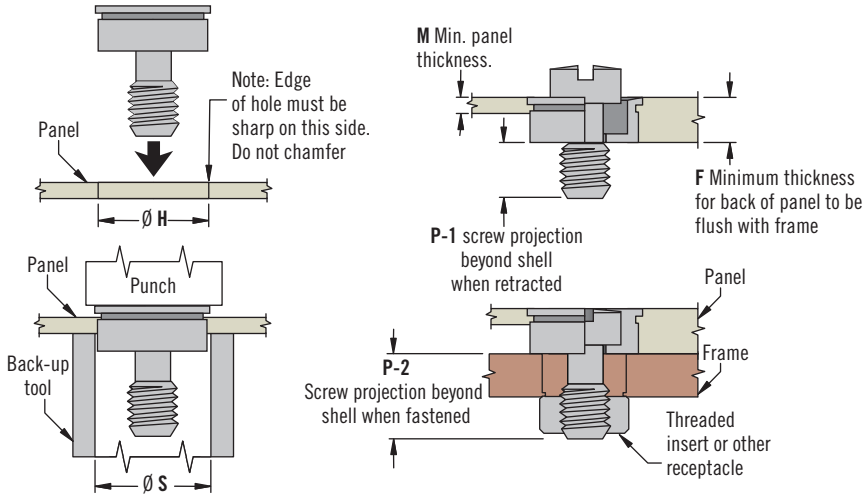

Thread Size	Max. Recommended Tightening Torque
M3/ 4-40	0.6 N⊂⊃m (5in⊂⊃lbf)
6-32	1.6 N⊂⊃m (14in⊂⊃lbf)
M4/ 8-32	2.8 N⊂⊃m (25in⊂⊃lbf)

See page 627 for additional installation guidelines

- **Flush when fastened**

Material and Finish

Shell: 303 Stainless steel, passivated

Screw:
Slotted: 303 stainless steel, passivated.
Phillips: 430 stainless steel, passivated

Notes

For use in most aluminums or in low carbon steels that are 1/4 hard or softer

Screws will float 0.5 (.02) total movement

Shipped assembled

Part Number

See table

Recess Style	Thread Size	Screw Dimensions					Slot Width	Screw Length L	Part Number		Screw Projection Beyond Outer Surface of Panel		Installation Dimensions			
		Ø A	Ø B	C	Ø D	T			Metric	Imperial	P-1	P-2	Ø H	M	F	Ø S
Phillips	M4 x 0.7 or UNC 8-32	10.1 (.40)	9.45 (.373)	3.1 (.122)	6.4 (.25)	4.3 (.17)	~	8.6 (.34)	F5-M4-P2	F5-832-P2	4.3 (.17)	5.6 (.22)	9.5 $^{+0.08}_{-0}$ (.375 $^{+.003}_{-0}$)	1.5 (.060)	3.2 (.125)	9.6 $^{+0.1}_{-0.05}$ (.379 $^{+.004}_{-.002}$)
								9.6 (.38)	F5-M4-P4	F5-832-P4		6.6 (.26)				
								10.6 (.42)	F5-M4-P6	F5-832-P6		7.6 (.30)				
								11.6 (.46)	F5-M4-P8	F5-832-P8		8.6 (.34)				
Slotted	M3 x 0.5 or UNC 4-40	7.1 (.28)	6.45 (.254)	1.7 (.067)	4 (.16)	3.8 (.15)	0.9 (.035)	5.8 (.23)	F5-90-402-20	F5-60-402-20	3.8 (.15)	4.1 (.16)	6.5 $^{+0.08}_{-0}$ (.257 $^{+.002}_{-.001}$)	1.3 (.050)	1.8 (.070)	6.6 $^{+0.1}_{-0.05}$ (.260 $^{+.004}_{-.002}$)
								7.9 (.31)	F5-90-406-20	F5-60-406-20		6.1 (.24)				
	UNC 6-32	8.1 (.32)	7.44 (.293)	2 (.082)	4.8 (.19)	3.8 (.15)	1 (.039)	6.4 (.25)	~	F5-60-602-20	3.8 (.15)	4.3 (.17)	7.5 $^{+0.08}_{-0}$ (.295 $^{+.003}_{-0}$)	1.4 (.055)	2.2 (.085)	7.6 $^{+0.1}_{-0.05}$ (.299 $^{+.004}_{-.002}$)
												6.4 (.25)				
								8.4 (.33)	~	F5-60-606-20		7.4 (.29)				
								9.4 (.37)	~	F5-60-608-20						
	M4 x 0.7 or UNC 8-32	10.1 (.40)	9.45 (.373)	2.34 (.092)	6.4 (.25)	5.1 (.20)	1.1 (.045)	8.9 (.35)	F5-M40-14	F5-832-14	5.1 (.20)	6.6 (.26)	9.5 $^{+0.08}_{-0}$ (.375 $^{+.003}_{-0}$)	1.5 (.060)	2.4 (.095)	9.6 $^{+0.1}_{-0.05}$ (.379 $^{+.004}_{-.002}$)
								9.9 (.39)	F5-M40-16	F5-832-16		7.6 (.30)				
								10.9 (.43)	F5-M40-18	F5-832-18		8.6 (.34)				

5T Captive Screws

Heat sink series

- **Maximize heat transfer from components to heatsink**
- **Positive fastening under shock and vibration**
- **Fastener allows for thermal expansion of components under a set preload**

Material and Finish

Screw: Hardened carbon steel, zinc plate, chromate plus sealer

Spring: 300 series stainless steel, passivated

Ferrule: Aluminum, natural

Performance Details

M3/4-40 Recommended Torque: 0.6 N⋅m (5.3 in⋅lbf)
M3.5/6-32 Recommended Torque: 1.08 N⋅m (9.6 in⋅lbf)

Installation Notes

1. Drill then countersink according to the required dimensions.
2. Insert screw assembly into prepared hole in panel. Place back-up tool as shown.
3. Place work under press, center tool over screw thread and flare ferrule into countersink in panel. Recommended load 2200 N.

Notes

Load applied by each screw: [3.4 (.13) * K] +7.57 N (1.7 lb)
Standard K value shown in the table. Load at given deflection
*shown in the fastened position above.

Part Number

See table

Unfastened

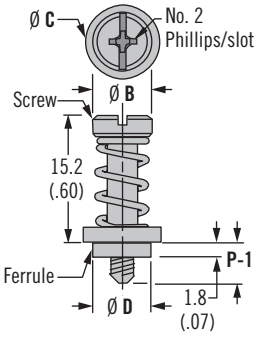

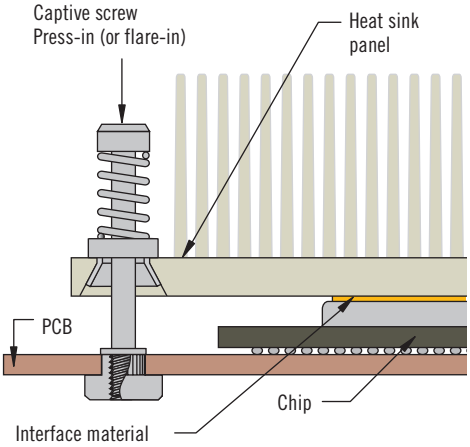

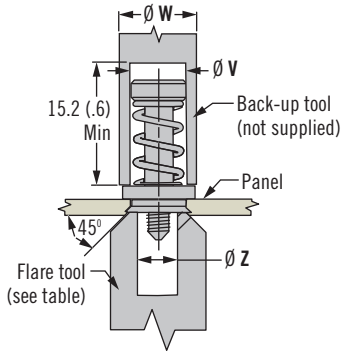

Fastened

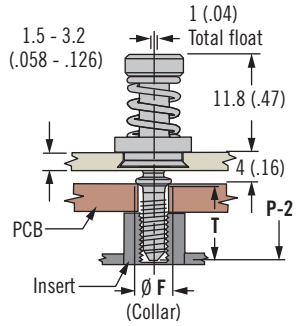

ACTUAL SIZE

Standard

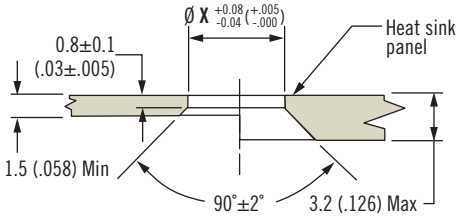

Alternate

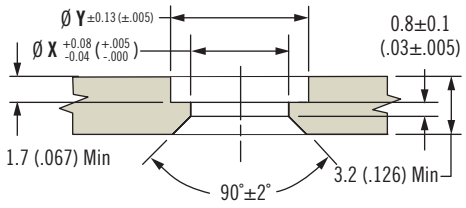

Thread Size	Ø V	Ø X	Ø Y	Ø W Min.	Ø Z	Tool Part Number
M3 or 4-40	7.1 (.28)	6.8 (.27)	9.5 (.37)	9.5 (.37)	5.1 (.2)	47-115
M3.5 or 6-32	7.9 (.31)	7.1 (.28)	10.7 (.46)	10.7 (.42)	5.6 (.22)	5T-06-Tool

Thread Size	Part Number	Panel Thickness		Screw Projection		T	Ø B	Ø C	Ø D	Ø F	Spring Rate K N/mm (lbf/in)	Load Max.* N (lbf)
		Min.	Max.	P1	P-2							
M3	5T-11-M3-222-5	1.5 (.058)	3.2 (.126)	5.9 (.232)	8.4 (331)	5 (.197)	6.8 (.27)	9 (.35)	6.7 (.294)	4.7 (.185)	4.45 (25.4)	22.5 (5)
4-40	5T-11-04-222-5											
M3.5	5T-11-M35-222-5			6.6 (.26)	9.9 (.39)	5.7 (.224)	7.6 (.30)	10.4 (.41)	7 (.275)	5 (.2)		
6-32	5T-11-06-222-5											

Dimensions in millimeters (inch) unless otherwise stated

N7 Captive Nut

Thru hole and blind styles

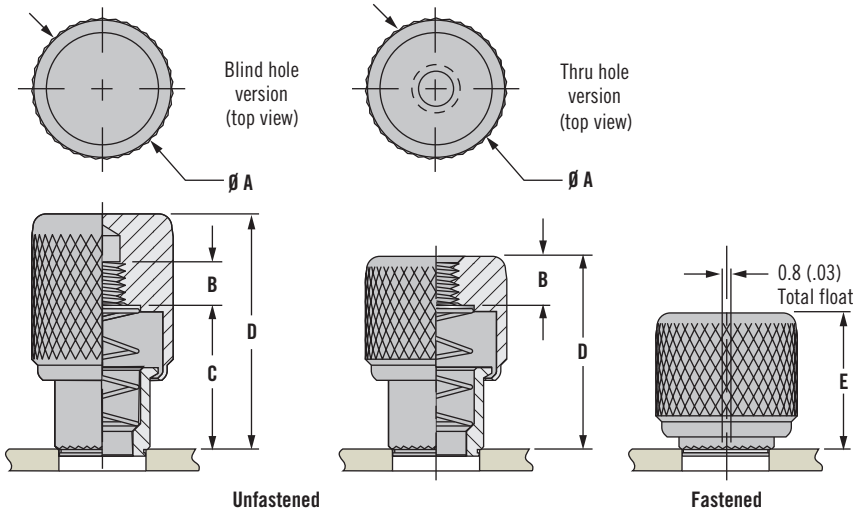

ACTUAL SIZE

Notes: For use in material hardnesses RB85 or less, such as low carbon steels that are half hard or softer, stainless steels in the annealed condition and aluminum.

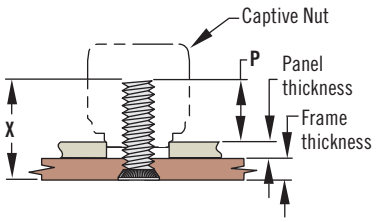

Thread Size	P Min.	P Max.
M3	7.1 (.28)	9.5 (.37)
M4	10 (.40)	12.1 (.47)
M5	10.2 (.41)	12.2 (.48)
M6	12.4 (.49)	16.7 (.66)
4-40	7.3 (.29)	9.4 (.37)
6-32	9.9 (.39)	13.1 (.51)
8-32	10.1 (.40)	13.3 (.52)
10-32	10.3 (.41)	13.5 (.53)
1/4-20	13 (.51)	16.5 (.65)

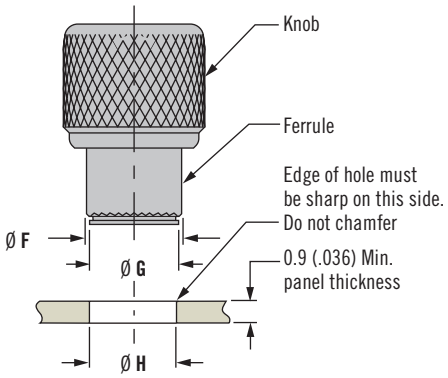

See page 627 for additional installation guidelines

Notes: Recommended minimum distance from edge of panel to centerline of hole is 1.5 x Ø H.

Thread Size	Knob Style	Part Number		Ø A	B (Thread Length)	C	D	E	Ø F	Ø G	Ø H
	Min.	Metric Natural	Inch Natural								
M3 or 4-40	Thru hole	N7-02-10	N7-52-10	10.6 (.42)	3.6 (.14)	~	12.8 (.50)	9.3 (.37)	6.4 (.25)	5.5 (.22)	5.6±0.04 (.220±.002)
	Blind hole	N7-02-11	N7-52-11		4 (.16)	9.2 (.36)	16.8 (.66)	13.3 (.52)			
6-32 UNC	Thru hole	~	N7-62-10	11.4 (.45)	4.7 (.19)	~	17.7 (.70)	12.5 (.49)	7.1 (.28)	6.3 (.25)	6.4 $^{+0.03}_{-0.05}$ (.252 $^{+.001}_{-.002}$)
	Blind hole	~	N7-62-11		5.4 (.21)	13 (.51)	23 (.91)	17.9 (.70)			
M4 or 8-32	Thru hole	N7-22-10	N7-72-10	13 (.51)	4.5 (.180	~	17.7 (.70)	12.5 (.49)	8.7 (.34)	7.9 (.31)	8 $^{+0}_{-0.08}$ (.315 $^{+0}_{-.003}$)
	Blind hole	N7-22-11	N7-72-11		5.4 (.21)	13.2 (.52)	23 (.91)	17.9 (.70)			
M5 or 10-32	Thru hole	N7-32-10	N7-82-10	13 (.51)	4.5 (.180	~	17.7 (.70)	12.5 (.49)	9 (.35)	7.9 (.31)	8 $^{+0}_{-0.08}$ (.315 $^{+0}_{-.003}$)
	Blind hole	N7-32-11	N7-82-11		5.4 (.21)	13.2 (.52)	23 (.91)	17.9 (.70)			
M6 or 1/4-20	Thru hole	N7-42-10	N7-92-10	14.6 (.58)	6.4 (.25)	~	22.8 (.90)	16 (.63)	10 (.39)	9.4 (.37)	9.5 $^{+0.1}_{-0}$ (.374 $^{+.004}_{-0}$)
	Blind hole	N7-42-11	N7-92-11		7 (.28)	16.4 (.65)	29.5 (1.16)	23 (.91)			

- **Spring ejected**
- **Knurled knob provides solid grip**
- **Fastens to externally threaded studs**
- **Helps speed panel replacement**

Material and Finish

Knob: Aluminum, natural

Ferrule: Hardened steel, zinc plate, chromate plus sealer

Spring: 302 Stainless steel, passivated

Installation Notes

1. Prepare hole in panel as shown
2. Provide a solid back-up surface behind the panel
3. Press the assembly into the panel until only the top of the knurl on the ferrule is visible

Threadstud insert selection for blind hole applications

Frame thickness + panel thickness + P Minimum = X Minimum

Frame thickness + panel thickness + P Maximum = X Maximum

Threadstud insert length (L): X Minimum < "L" > X Maximum

"L" values greater than X Maximum must use the thru hole version

If a weld stud is used, omit the frame thickness from the calculations (see the table and diagram to the right)

*The above dimensions are for blind hole captive nuts

09 Series Fast-Lead Screws

Studs · Small

Material and Finish

Low carbon steel, case hardened, zinc plated, chromate plus sealer or stainless steel

How to Specify:

1. Determine your outer panel and frame thicknesses:
Outer panel P =
Frame thickness F =
2. Choose your receptacle
3. Choose the retainer style
4. Find the correct constant in table opposite using the receptacle and retainer selected
5. Add outer panel thickness (P), frame thickness (F), and the constant found in step 4 to determine your total material thickness (TMT)
TMT = P+F+Constant
6. Find the TMT value in the ranges given in Column 1 in the part number table
7. Confirm that the outer panel thickness P does not exceed the value given in Column 2. This will confirm that your retainer will install properly beyond the last thread and retain your screw to the outer panel
8. Going across the row in the part number table, find the part number that matches your desired head style

Part Number

See table

Notes

For full screw retraction, **B** must be less than frame thickness plus receptacle height

For stainless steel screw (slotted, and knurled ONLY) replace last 2 digits of part number with "26". Example: 09-11-102-26

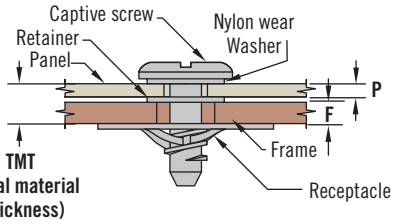

Slot

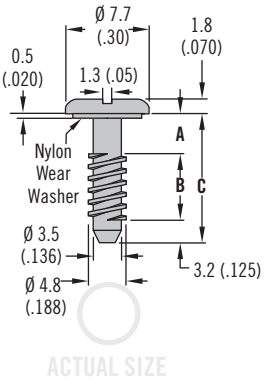

Knurled Head

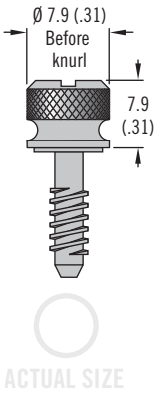

Tool head Recess

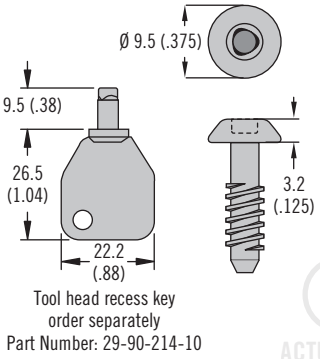

Phillips Recess

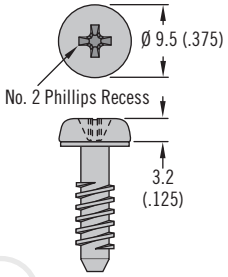

Constant Table				
Retainer Type	Receptacle Type			
	Flat Rivet or Weld	Clip	Saddle	Press-In
Stainless steel	0.3 (.012)	1.0 (.032)	4.5 (.177)	-1.3 (-.050)
Nylon	1.1 (.043)	1.6 (.063)	5.3 (.208)	-0.5 (-.020)

Column 1		Column 2	Screw Assembly Part Number				Dimensions		
TMT		Outer Panel P	Slotted	Knurled	Tool Head Recess	Phillips Recess	A	B	C
Min.	Max.								
1.3 (.050)	3.2 (.125)	0.9 (.035)	09-11-102-11	09-13-102-11	09-T-102	09-P-102	2.5 (.100)	5.0 (.197)	10.7 (.422)
2.5 (.100)	3.2 (.125)	2.2 (.085)	09-11-103-11	09-13-103-11	09-T-103	09-P-103	3.8 (.150)	3.7 (.147)	
1.3 (.050)	6.4 (.250)	0.9 (.035)	09-11-202-11	09-13-202-11	09-T-202	09-P-202	2.5 (.100)	8.2 (.322)	13.9 (.547)
2.5 (.100)	6.4 (.250)	2.2 (.085)	09-11-203-11	09-13-203-11	09-T-203	09-P-203	3.8 (.150)	6.9 (.272)	
3.8 (.150)	6.4 (.250)	3.4 (.135)	09-11-204-11	09-13-204-11	09-T-204	09-P-204	5.1 (.200)	5.6 (.222)	
5.1 (.200)	6.4 (.250)	4.7 (.185)	09-11-205-11	09-13-205-11	09-T-205	09-P-205	6.4 (.250)	4.4 (.172)	
1.3 (.050)	9.5 (.375)	0.9 (.035)	09-11-302-11	09-13-302-11	09-T-302	09-P-302	2.5 (.100)	11.4 (.447)	17.1 (.672)
2.5 (.100)	9.5 (.375)	2.2 (.085)	09-11-303-11	09-13-303-11	09-T-303	09-P-303	3.8 (.150)	10.1 (.397)	
3.8 (.150)	9.5 (.375)	3.4 (.135)	09-11-304-11	09-13-304-11	09-T-304	09-P-304	5.1 (.200)	8.8 (.347)	
5.1 (.200)	9.5 (.375)	4.7 (.185)	09-11-305-11	09-13-305-11	09-T-305	09-P-305	6.4 (.250)	7.3 (.297)	
7.6 (.300)	9.5 (.375)	7.2 (.285)	09-11-307-11	09-13-307-11	09-T-307	09-P-307	8.9 (.350)	5.0 (.197)	

Dimensions in millimeters (inch) unless otherwise stated

Flat Type Receptacle

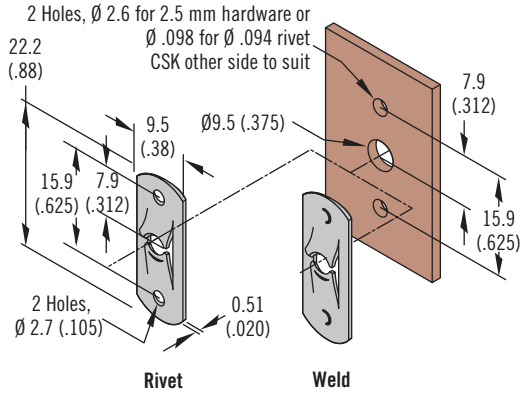

Clip-On Type Receptacle

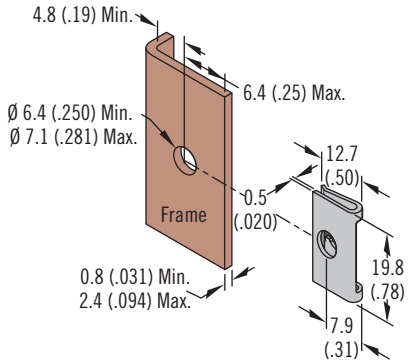

Self-Clinching Receptacle Free Running

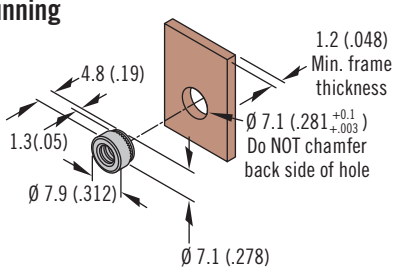

Saddle Type Receptacle

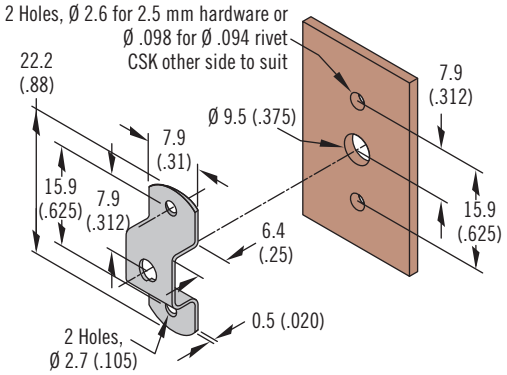

Retainers

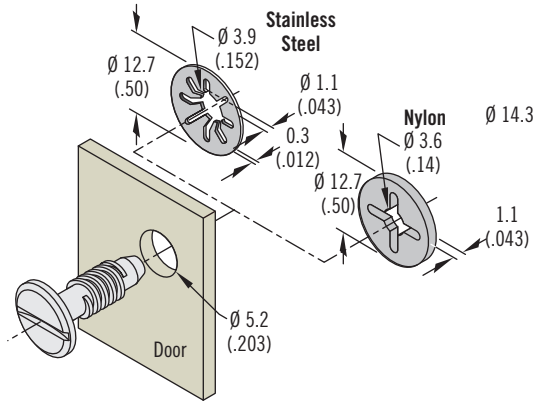

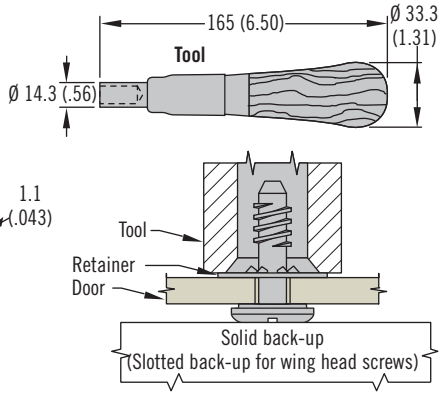

Type	Receptacle Part Number	
	Steel	Stainless steel
Flat receptacle rivet-on	09-41-101-11	09-41-101-24
Flat receptacle weld-on	~	09-41-103-24
Clip-on receptacle	09-43-101-11	09-43-101-24
Press-in receptacle	09-44-101-11	~
Saddle type receptacle	09-42-101-11	09-42-101-24

Retainer Style	Retainer Part Number	Tool Part Number
302 Stainless steel, passivated	09-6-1	12-0-20980-11
Nylon, black	09-49-102-42	

Material and Finish
Steel, zinc immersion coating or stainless steel

Installation Notes
See page 627 for self-clinching installation guidelines

Part Number
See table

12 Series Fast-Lead Screws

Studs · Medium

Material and Finish

Low carbon steel, case hardened, zinc plate, chromate plus sealer or stainless steel

How to Specify:

1. Determine your outer panel and frame thicknesses:
Outer panel P =
Frame thickness F =

2. Choose your receptacle

3. Choose the retainer style

4. Find the correct constant in table opposite using the receptacle and retainer selected

5. Add outer panel thickness (P), frame thickness (F), and the constant found in step 4 to determine your total material thickness (TMT)
TMT = P+F+Constant

6. Find the TMT value in the ranges given in Column 1 in the part number table

7. Confirm that the outer panel thickness P does not exceed the value given in Column 2. This will confirm that your retainer will install properly beyond the last thread and retain your screw to the outer panel

8. Going across the row in the part number table, find the part number that matches your desired head style

Notes

For full screw retraction, **B** must be less than inner panel thickness plus receptacle height

For stainless steel screw (slot, wing and knurled ONLY) replace last 2 digits of part number with "12". Example: 12-11-102-12

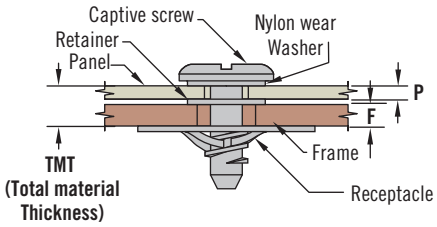

Slot

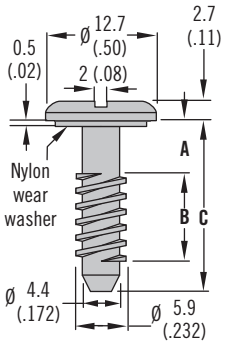

Wing Head

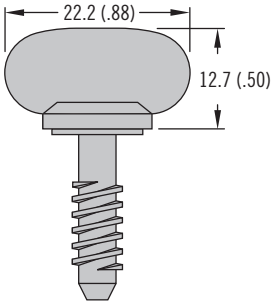

Knurled Head

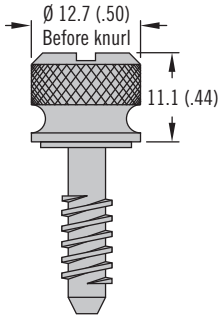

ACTUAL SIZE

Tool head Recess

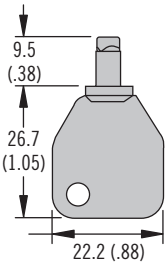

Tool head recess key order separately
Part number 29-90-214-10

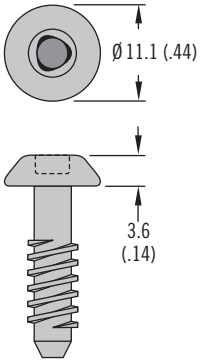

Phillips Recess

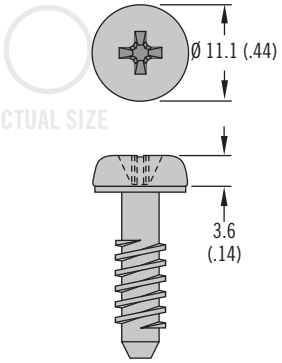

ACTUAL SIZE

Dimensions in millimeters (inch) unless otherwise stated

Constant Table					
Retainer type	Receptacle Type				
	Flat	Clip	Saddle	Side	Press-In
Stainless steel	0.38 (.015)	1.1 (.045)	4.0 (.156)	1.5 (.060)	-1.3 (-.050)
Nylon	1.4 (.054)	2.0 (.079)	5.31 (.210)	1.5 (.060)	-0.5 (-.020)

Part Number

See table

Column 1		Column 2	Screw Assembly Part Number					Dimensions		
TMT to be Fastened		Max. Thickness of Outer Panel P	Slotted	Wing	Knurled	Tool Head Recess	Phillips Recess	A	B	C
Min.	Max.									
1.3 (.050)	3.2 (.125)	0.6 (.025)	12-11-102-11	12-12-102-11	12-13-102-11	12-T-102	12-P-102	2.5 (.100)	5.8 (.228)	12.3 (.486)
2.5 (.100)		1.9 (.075)	12-11-103-11	12-12-103-11	12-13-103-11	12-T-103	12-P-103	3.8 (.150)	4.5 (.178)	
1.3 (.050)	6.4 (.250)	0.6 (.025)	12-11-202-11	12-12-202-11	12-13-202-11	12-T-202	12-P-202	2.5 (.100)	9.0 (.353)	15.5 (.611)
2.5 (.100)		1.9 (.075)	12-11-203-11	12-12-203-11	12-13-203-11	12-T-203	12-P-203	3.8 (.150)	7.7 (.303)	
3.8 (.150)		3.2 (.125)	12-11-204-11	12-12-204-11	12-13-204-11	12-T-204	12-P-204	5.1 (.200)	6.4 (.253)	
5.1 (.200)		4.5 (.175)	12-11-205-11	12-12-205-11	12-13-205-11	12-T-205	12-P-205	6.4 (.250)	5.2 (.203)	
1.3 (.050)	9.5 (.375)	0.6 (.025)	12-11-302-11	12-12-302-11	12-13-302-11	12-T-302	12-P-302	2.5 (.100)	12.1 (.478)	18.7 (.736)
2.5 (.100)		1.9 (.075)	12-11-303-11	12-12-303-11	12-13-303-11	12-T-303	12-P-303	3.8 (.150)	10.9 (.428)	
3.8 (.150)		3.2 (.125)	12-11-304-11	12-12-304-11	12-13-304-11	12-T-304	12-P-304	5.1 (.200)	9.6 (.378)	
5.1 (.200)		4.5 (.175)	12-11-305-11	12-12-305-11	12-13-305-11	12-T-305	12-P-305	6.4 (.250)	8.3 (.328)	
7.6 (.300)		7.0 (.275)	12-11-307-11	12-12-307-11	12-13-307-11	12-T-307	12-P-307	8.9 (.350)	5.8 (.228)	
2.5 (.100)	12.7 (.500)	1.9 (.075)	12-11-403-11	12-12-403-11	12-13-403-11	12-T-403	12-P-403	3.8 (.150)	14.1 (.553)	21.9 (.861)
3.8 (.150)		3.2 (.125)	12-11-404-11	12-12-404-11	12-13-404-11	12-T-404	12-P-404	5.1 (.200)	12.8 (.503)	
5.1 (.200)		4.5 (.175)	12-11-405-11	12-12-405-11	12-13-405-11	12-T-405	12-P-405	6.4 (.250)	11.5 (.453)	
7.6 (.300)		7.0 (.275)	12-11-407-11	12-12-407-11	12-13-407-11	12-T-407	12-P-407	8.9 (.350)	9.0 (.353)	
10.2 (.400)		9.5 (.375)	12-11-409-11	12-12-409-11	12-13-409-11	12-T-409	12-P-409	11.4 (.450)	6.4 (.253)	
2.5 (.100)	15.9 (.625)	1.9 (.075)	12-11-503-11	12-12-503-11	12-13-503-11	12-T-503	12-P-503	3.8 (.150)	17.2 (.678)	25 (.986)
3.8 (.150)		3.2 (.125)	12-11-504-11	12-12-504-11	12-13-504-11	12-T-504	12-P-504	5.1 (.200)	16.0 (.628)	
5.1 (.200)		4.5 (.175)	12-11-505-11	12-12-505-11	12-13-505-11	12-T-505	12-P-505	6.4 (.250)	14.7 (.578)	
7.6 (.300)		7.0 (.275)	12-11-507-11	12-12-507-11	12-13-507-11	12-T-507	12-P-507	8.9 (.350)	12.1 (.478)	
10.2 (.400)		9.5 (.375)	12-11-509-11	12-12-509-11	12-13-509-11	12-T-509	12-P-509	11.4 (.450)	9.6 (.378)	
12.7 (.500)		12.1 (.475)	12-11-511-11	12-12-511-11	12-13-511-11	12-T-511	12-P-511	14 (.550)	7.1 (.278)	
2.5 (.100)	19.1 (.750)	1.9 (.075)	12-11-603-11	12-12-603-11	12-13-603-11	12-T-603	12-P-603	3.8 (.150)	20.4 (.803)	28.2 (1.111)
3.8 (.150)		3.2 (.125)	12-11-604-11	12-12-604-11	12-13-604-11	12-T-604	12-P-604	5.1 (.200)	19.1 (.753)	
5.1 (.200)		4.5 (.175)	12-11-605-11	12-12-605-11	12-13-605-11	12-T-605	12-P-605	6.4 (.250)	17.9 (.703)	
7.6 (.300)		7.0 (.275)	12-11-607-11	12-12-607-11	12-13-607-11	12-T-607	12-P-607	8.9 (.350)	15.3 (.603)	
10.2 (.400)		9.5 (.375)	12-11-609-11	12-12-609-11	12-13-609-11	12-T-609	12-P-609	11.4 (.450)	12.8 (.503)	
12.7 (.500)		12.1 (.475)	12-11-611-11	12-12-611-11	12-13-611-11	12-T-611	12-P-611	14 (.550)	10.2 (.403)	
15.3 (.600)		14.6 (.575)	12-11-613-11	12-12-613-11	12-13-613-11	12-T-613	12-P-613	16.5 (.650)	7.7 (.303)	
17.8 (.700)		17.2 (.675)	12-11-615-11	12-12-615-11	12-13-615-11	12-T-615	12-P-615	19.1 (.750)	5.2 (.203)	

12 Series Fast-Lead Screws

Receptacles · Medium

Material and Finish

Steel, zinc immersion coating or stainless steel

Side mount receptacle: 1064 steel, zinc immersion coating

Press-in receptacle: low carbon steel, case hardened and zinc plate, chromate plus sealer

Installation Notes

See page 627 for self-clinching installation guidelines

Side Mount Receptacle

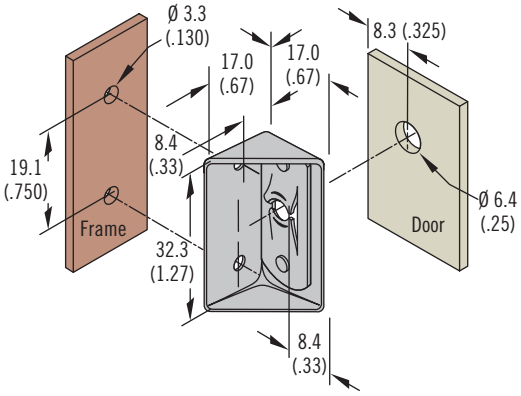

Flat Type Receptacle

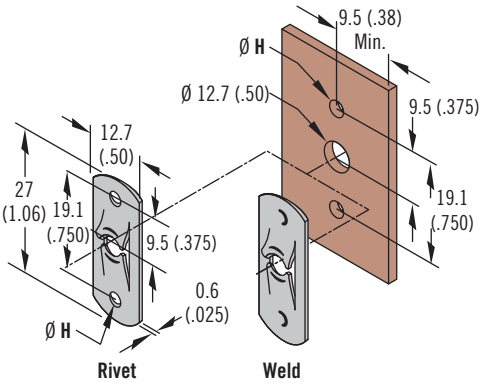

Self-Clinching Receptacle Free Running

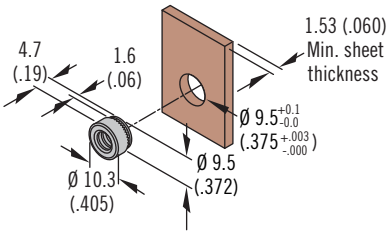

Saddle Type Receptacle

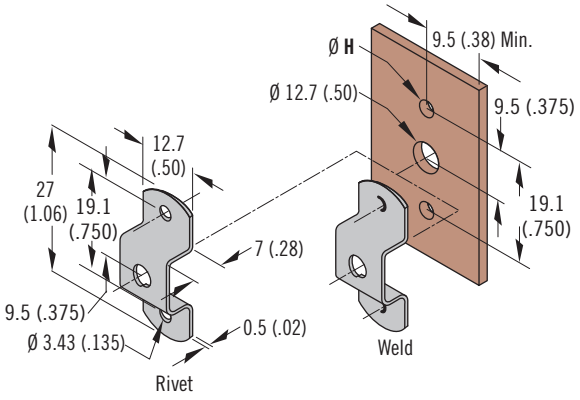

Part Number

See table

Type	Ø H	Receptacle Part Number	
		Steel	Stainless steel
Side mount receptacle	~	12-90-101-10	~
Flat receptacle rivet	2.7 (.105)	12-11015-13	12-11015-14
	3.4 (.135)	12-11020-11	12-11020-13
Flat receptacle weld-on	~	~	12-11016-11
Press-in receptacle	~	12-44-101-11	~
Saddle receptacle rivet	3.4 (.135)	12-11043-11	12-11043-12
Saddle receptacle weld-on	~	~	12-11044-12

Dimensions in millimeters (inch) unless otherwise stated

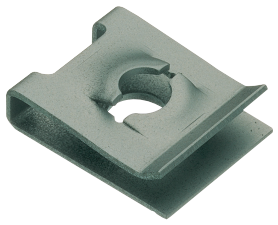

Clip-On Type Receptacle

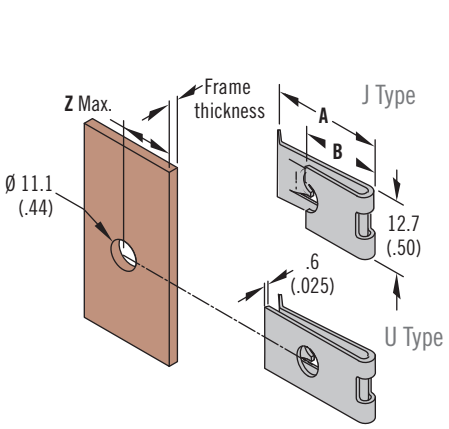

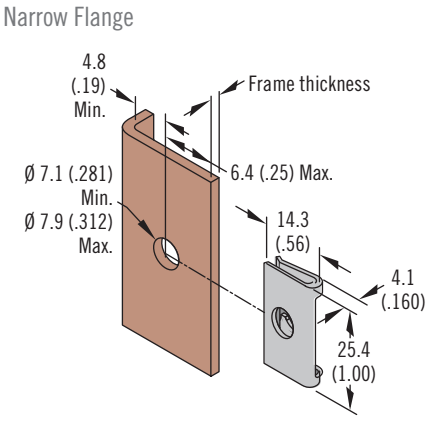

Type	Frame Thickness	A	B	Z Max.	Receptacle Part Number	
					Steel	Stainless steel
Clip-on receptacle - J	0.8 (.031) to 2.8 (.109)	24.8 (.98)	14.2 (.56)	12.7 (.50)	12-11025-11	~
Clip-on receptacle - U	0.8 (.031) to 2.8 (.109)	25.9 (1.02)			12-11017-11	12-11017-12
	2.8 (.109)- 4.1 (.161)			11.9 (.47)	12-11027-11	~
	2.8 (.109)- 4.1 (.161)				~	12-11027-12
	4.1 (.161)- 5.5 (.213)	24.8 (.98)	13.5 (.53)	11.1 (.44)	12-11029-11	~
	5.4 (.213)- 6.7 (.265)	24.5 (.97)	13.01 (.51)		12-11031-11	~
Clip-on receptacle - Narrow flange	0.8 (.031)- 2.8 (.109)	~	~	~	12-11050-27	~

Material and Finish
Steel, zinc immersion coating or stainless steel

Part Number
See table

Retainers

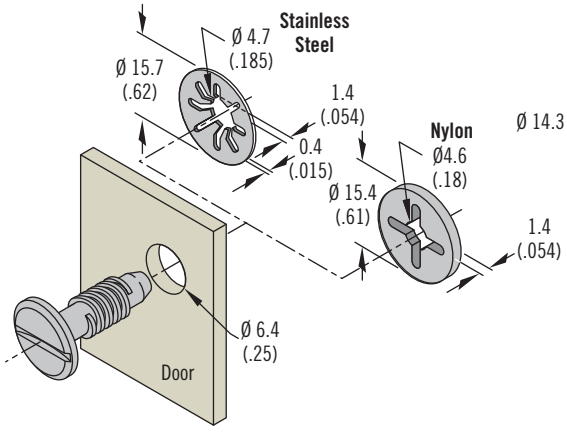

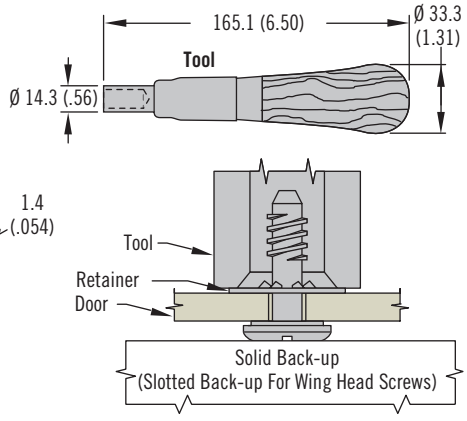

Retainer Style	Retainer Part Number	Tool Part Number
304 Stainless steel, passivated	12-6-1	12-0-20980-11
Nylon, black	12-11064-42	

Part Number
See table

17 Series Fast-Lead Screws

Studs · Large

Material and Finish

Low carbon steel, case hardened, zinc plated, chromate plus sealer or stainless steel

1. Determine your outer panel and frame thicknesses:
Outer panel P =
Frame thickness F =

2. Choose your receptacle

3. Choose the retainer style

4. Find the correct constant in table opposite using the receptacle and retainer selected

5. Add outer panel thickness (P), frame thickness (F), and the constant found in step 4 to determine your total material thickness (TMT)
TMT = P+F+Constant

6. Find the TMT value in the ranges given in Column 1 in the part number table

7. Confirm that the outer panel thickness P does not exceed the value given in Column 2. This will confirm that your retainer will install properly beyond the last thread and retain your screw to the outer panel

8. Going across the row in the part number table, find the part number that matches your desired head style

Notes

For full screw retraction, **B** must be less than inner panel thickness plus receptacle height

For stainless steel screw (slotted, wing and knurled ONLY) replace last 2 digits of part number with "12". Example: 17-11-104-12

Part Number

See table

Slot

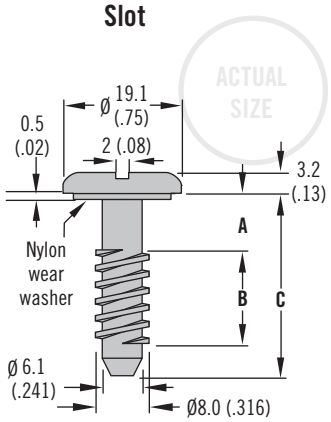

Wing Head

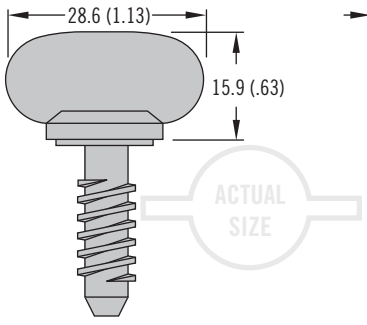

Knurled Head

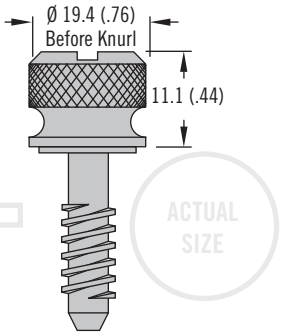

Tool Head Recess

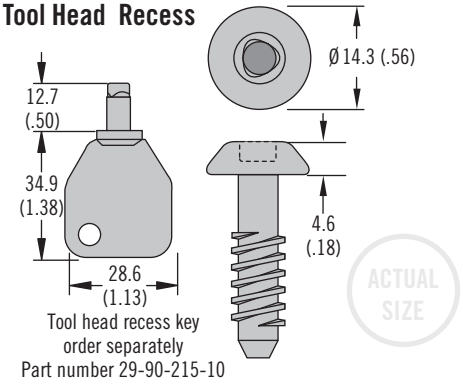

Tool head recess key order separately
Part number 29-90-215-10

Constant Table			
Retainer type	Receptacle Type		
	Flat	Clip	Side
Stainless steel	0.38 (.015)	2.2 (.086)	1.5 (.060)
Nylon	1.9 (.076)	3.5 (.137)	1.5 (.060)

Column 1		Column 2	Screw Assembly Part Number				Dimensions		
TMT to be Fastened		Max. Thickness Of Outer Panel P	Slotted	Wing	Knurled	Tool Head Recess	A	B	C
Min.	Max.								
2.5 (.100)	6.4 (.250)	3.1 (.120)	17-11-104-11	17-12-104-11	17-13-104-11	17-T-104	5.1 (.200)	9.1 (.360)	19.1 (.751)
5.1 (.200)		5.6 (.220)	17-11-106-11	17-12-106-11	17-13-106-11	17-T-106	7.6 (.300)	6.6 (.260)	
2.5 (.100)	9.5 (.375)	3.1 (.120)	17-11-204-11	17-12-204-11	17-13-204-11	17-T-204	5.1 (.200)	12.3 (.485)	22.3 (.876)
5.1 (.200)		5.6 (.220)	17-11-206-11	17-12-206-11	17-13-206-11	17-T-206	7.6 (.300)	9.8 (.385)	
7.6 (.300)		8.1 (.320)	17-11-208-11	17-12-208-11	17-13-208-11	17-T-208	10.2 (.400)	7.2 (.285)	
2.5 (.100)	12.7 (.500)	3.1 (.120)	17-11-304-11	17-12-304-11	17-13-304-11	17-T-304	5.1 (.200)	15.5 (.610)	25.4 (1.001)
5.1 (.200)		5.6 (.220)	17-11-306-11	17-12-306-11	17-13-306-11	17-T-306	7.6 (.300)	13 (.510)	
7.6 (.300)		8.1 (.320)	17-11-308-11	17-12-308-11	17-13-308-11	17-T-308	10.2 (.400)	10.4 (.410)	
10.2 (.400)		10.7 (.420)	17-11-310-11	17-12-310-11	17-13-310-11	17-T-310	12.7 (.500)	7.9 (.310)	
2.5 (.100)	15.9 (.625)	3.1 (.120)	17-11-404-11	17-12-404-11	17-13-404-11	17-T-404	5.1 (.200)	18.7 (.735)	28.6 (1.126)
5.1 (.200)		5.6 (.220)	17-11-406-11	17-12-406-11	17-13-406-11	17-T-406	7.6 (.300)	16.1 (.635)	
7.6 (.300)		8.1 (.320)	17-11-408-11	17-12-408-11	17-13-408-11	17-T-408	10.2 (.400)	13.6 (.535)	
10.2 (.400)		10.7 (.420)	17-11-410-11	17-12-410-11	17-13-410-11	17-T-410	12.7 (.500)	11.1 (.435)	
12.7 (.500)		13.2 (.520)	17-11-412-11	17-12-412-11	17-13-412-11	17-T-412	15.2 (.600)	8.5 (.335)	
15.2 (.600)		15.8 (.620)	17-11-414-11	17-12-414-11	17-13-414-11	17-T-414	17.8 (.700)	6.0 (.235)	

Dimensions in millimeters (inch) unless otherwise stated

Side Mount Receptacle

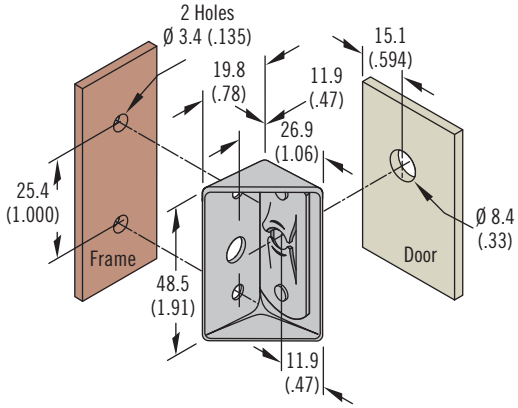

Clip-On Type Receptacle

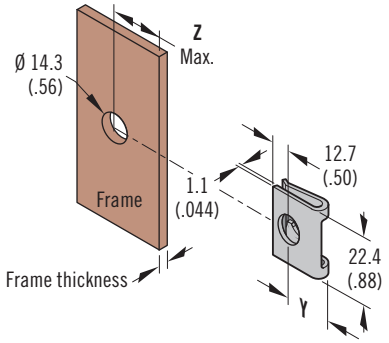

Flat Type Receptacle

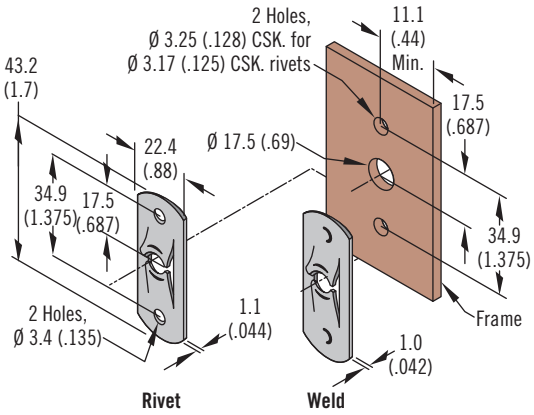

Retainers

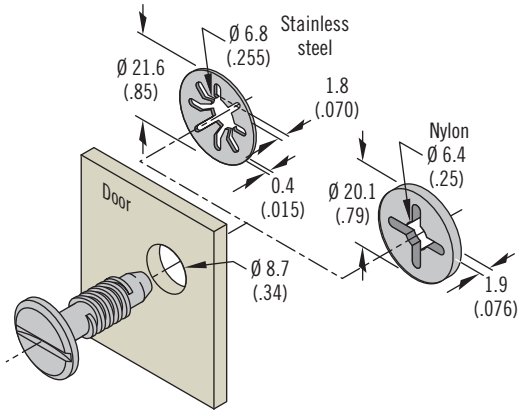

Material and Finish

Steel, zinc immersion coating or stainless steel

Type	Frame Thickness	Y	Z Max.	Receptacle Part Number	
				Steel	Stainless steel
Side mount receptacle	~	~	~	17-90-101-10	~
Clip-on type receptacle	1.1 - 2.4 (.045 - .093)	15.7 (.62)	15.0 (.59)	17-10017-11	~
	2.4 - 3.6 (.093 - .142)	14.7 (.58)	14.2 (.56)	17-10027-11	~
	3.6 - 4.9 (.142 - .191)	13.7 (.54)		17-10029-11	~
	4.9 - 6.1 (.191 - .240)	13.5 (.53)	13.5 (.53)	17-10031-11	~
	6.1 - 7.3 (.240 - .289)	13.0 (.51)	12.7 (.50)	17-10033-11	~
Flat type receptacle - Rivet	~	~	~	17-10015-13	17-10015-14
Flat type receptacle - Weld	~	~	~	~	17-10016-11

Retainer Style	Retainer Part Number	Tool Part Number
302 Stainless steel, passivated	17-6-1	17-0-24585-11
Nylon, black	17-10054-42	17-0-21333-11

Part Number

See table

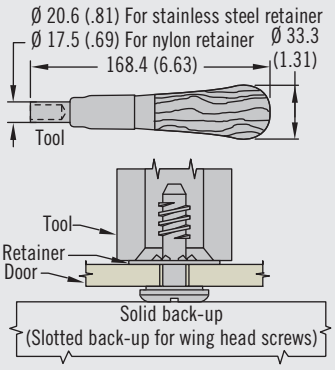

DM Inserts

Monosert rack attach

- **Front install insert for rack attach applications**

Material and Finish

Steel, zinc plated

Installation Notes

Max. tightening torque:
2 Ncm (17.7 inlbf)

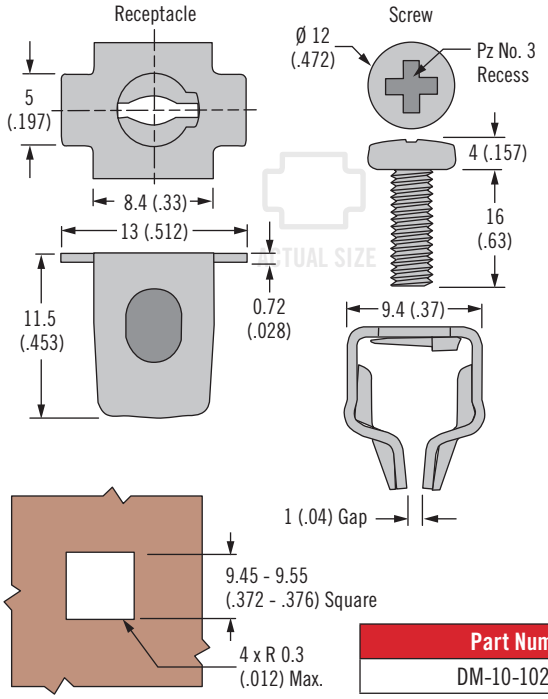

Standard Installation

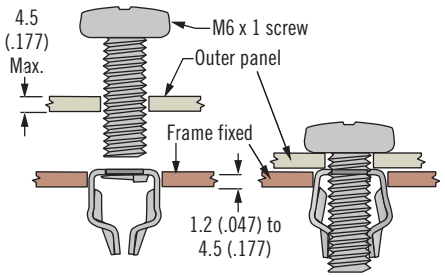

Alternative Installation

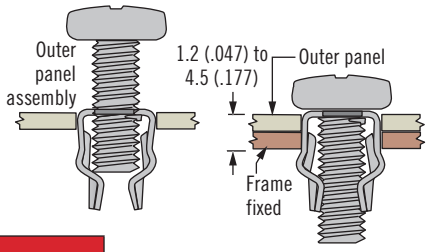

Part Number
DM-10-10216-10

DM Inserts

Duosert rack attach

- **Front install insert for rack attach applications**

Material and Finish

Zinc alloy and stainless steel, natural

Installation Notes

Max. tightening torque:
10 Ncm (88.5 inlbf)
Max. panel thickness:
1 - 1.2 (.039 - .047)

Recommended installation tool requires a flat blade screwdriver

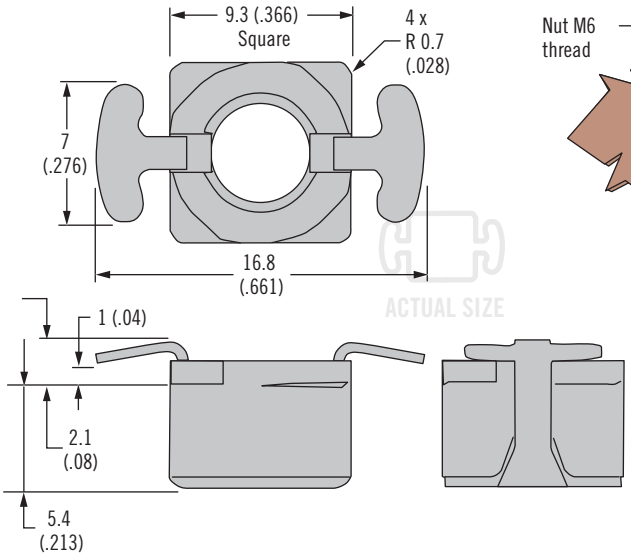

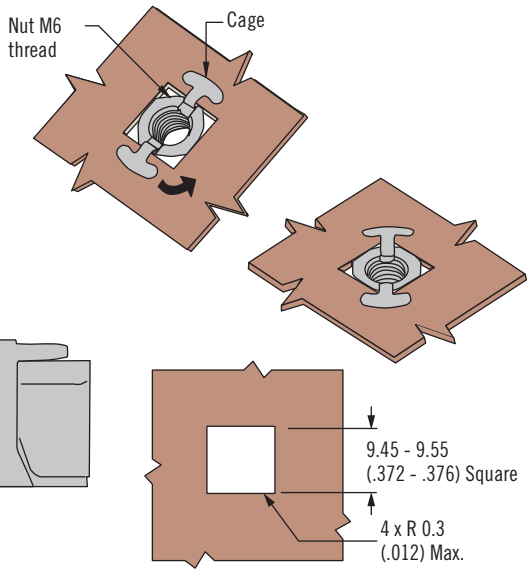

Part Number
DM-95-10-12-11

Receptacle only. (Screw not supplied)

Dimensions in millimeters (inch) unless otherwise stated

INJECT / EJECT MECHANISMS

Inject / eject mechanisms provide hardware necessary for the insertion and extraction of PC boards, modules and faceplates. In addition, they provide microswitch activation for hot swap.

The *PICMG*® (PCI Industrial Computer Manufacturer´s Group) organization has developed several standards for commercial-off-the-shelf solutions including, *ATCA*®, *AdvancedMC*®, *µTCA*® and *CompactPCI*® to regulate the format and interconnection of telecommunication server equipment.

Southco offers many inject / eject mechanisms that are *PICMG*®-compliant.

Our technical design team has also developed custom solutions for many of the top global OEM's. If one of these standard solutions does not meet your needs, a custom solution can.

PICMG, ATCA, AdvancedMC, µTCA and CompactPCI are registered trademarks of PICMG® - PCI Industrial Computer Manufacturers Group, Inc.

Industry Standard Ejectors

Pages 574-587

P7

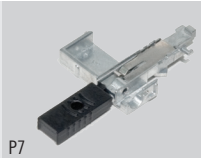
P7

P7

P7

Inject / Eject device designs are largely driven by customer needs in the following areas:

- Hot swap capability
- Greater pin tension
- More weight on PC board
- Ever-increasing demands for smaller profiles and less protrusion on boards and faceplates
- Higher pin density interconnects
- Higher insertion / extraction forces
- Secondary locking devices
- Proper grounding and alignment

Inject / Eject Solutions

Pages 588-589

CN

CN

CN

P7

P7

Inject / Eject Mechanisms

Selection guide

Use this selection guide to choose the right inject / eject mechanism for your application

		Product Class	MATERIAL: Plated Steel and Plastic	Zinc Alloy	Zinc Alloy and Plastic	Plastic
ATCA® PAGES 574-579		P7-A-513-11	✔			
		P7-A-523-11	✔			
		P7-A-533-11	✔			
		P7-A-543-11	✔			
AdvancedMC® PAGES 582-587		P7-M-811-000		✔		
		P7-M-812-000		✔		
		P7-M-813-000		✔		
		P7-M-822-000		✔		
		P7-M-823-000		✔		
CompactPCI® PAGES 580-581		P7-1-981-10			✔	
		P7-1-991-10			✔	
OTHER PAGES 588-591		CN-10-3-A			✔	
		CN-10-9-A				✔
		CN-11			✔	
		P7-99-103-53		✔		
		P7-1-30X-X5	✔			

CompactPCI, AdvancedMC and ATCA are registered trademarks of PICMG® - PCI Industrial Computer Manufacturers Group, Inc.

Dimensions in millimeters (inch) unless otherwise stated

PERFORMANCE						ENVELOPE SIZE	
Maximum Insertion Load per Ejector	250 Cycles Minimum	V0 Flammability Rating	Secondary Catch	Activates Microswitch	Compliant with PICMG Standard	Outside of Faceplate (L x W x H)	Inside of Faceplate (L x W x H)
320 N (72 lbf)	✔	✔	✔	✔	✔	58.20 x 4.80 x 17.50 (2.29 x 0.19 x 0.69)	39.92 x 2.50 x 13.00 (1.57 x 0.10 x 0.51)
320 N (72 lbf)	✔	✔	✔	✔	✔	58.20 x 4.80 x 17.50 (2.29 x 0.19 x 0.69)	39.92 x 2.50 x 13.00 (1.57 x 0.10 x 0.51)
320 N (72 lbf)	✔	✔	✔	✔	✔	58.20 x 4.80 x 17.50 (2.29 x 0.19 x 0.69)	38.62 x 2.50 x 13.00 (1.52 x 0.10 x 0.51)
320 N (72 lbf)	✔	✔	✔	✔	✔	58.20 x 4.80 x 17.50 (2.29 x 0.19 x 0.69)	38.62 x 2.50 x 13.00 (1.52 x 0.10 x 0.51)
N/A	✔	✔	✔	✔	✔	19.55 x 5.65 x 8.86 (0.77 x 0.22 x 0.35)	33.85 x 5.65 x 12.50 (1.33 x 0.22 x 0.49)
N/A	✔	✔	✔	✔	✔	19.55 x 5.65 x 8.86 (0.77 x 0.22 x 0.35)	33.85 x 5.65 x 12.50 (1.33 x 0.22 x 0.49)
N/A	✔	✔	✔	✔	✔	19.55 x 5.65 x 8.86 (0.77 x 0.22 x 0.35)	33.85 x 5.65 x 12.50 (1.33 x 0.22 x 0.49)
N/A	✔	✔	✔	✔	✔	5.05 x 5.65 x 14.50 (0.20 x 0.22 x 0.57)	39.70 x 6.18 x 17.55 (1.56 x 0.24 x 0.69)
N/A	✔	✔	✔	✔	✔	5.05 x 5.65 x 14.50 (0.20 x 0.22 x 0.57)	39.70 x 6.18 x 17.55 (1.56 x 0.24 x 0.69)
117 N (26 lbf)	✔	✔	✔	✔	✔	36.00 x 25.00 x 19.90 (1.42 x 0.98 x 0.78)	25.25 x 25.00 x 19.90 (0.99 x 0.98 x 0.78)
117 N (26 lbf)	✔	✔	✔	✔	✔	25.00 x 19.90 x 36.00 (0.98 x 0.78 x 1.42)	25.25 x 25.00 x 19.90 (0.99 x 0.98 x 0.78)
220 N (50 lbf)	✔	✔	✔	✔		62 x 18 x 18 (2.44 x .71 x .71)	14 x 10 x 18 (.55 x .39 x .71)
110 N (24.7 lbf)	✔	✔	✔	✔		62 x 18 x 18 (2.44 x .71 x .71)	Flush
200 N (45 lbf)	✔	✔	✔			35 x 15 x 30 (1.38 x .59 x 1.18)	19 x 5 x 15 (.75 x .20 x .59)
400 N (90 lbf)	✔	✔	✔			52 x 23 x 3 (2.05 x .91 x .12)	52 x 23 x 21 (2.05 x .91 x .83)
325 N (72 lbf)	✔	✔	✔			54 x 17 x 22.5 (2.13 x .67 x .89)	15.5 x 10.35 x 7 (.61 x .41 x .28)

Dimensions in millimeters (inch) unless otherwise stated

P7 *ATCA*® Inject / Eject Mechanism

Ejectors

- **Ergonomic inject / eject lever designed for easy operation**
- **Secondary catch on inject / eject operates microswitch to permit hot-swapping**

Material and Finish

Steel plated and glass-filled nylon, black
Washers: Stainless steel

Performance Details

Flammability rating: UL94-V0

Installation Notes

See page 577

Notes

Custom colors available, please contact Southco

Lever Style Switch Operation

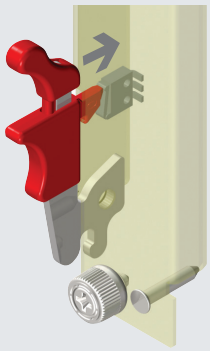

Plunger Style Switch Operation

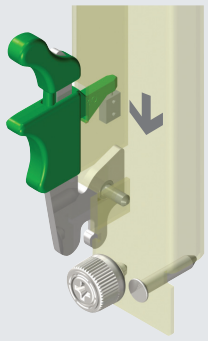

ATCA is a registered trademark of PICMG® - PCI Industrial Computer Manufacturers Group, Inc.

Lever Style Switch

Panel thickness 0.8 - 1.5 (.031 - .059)

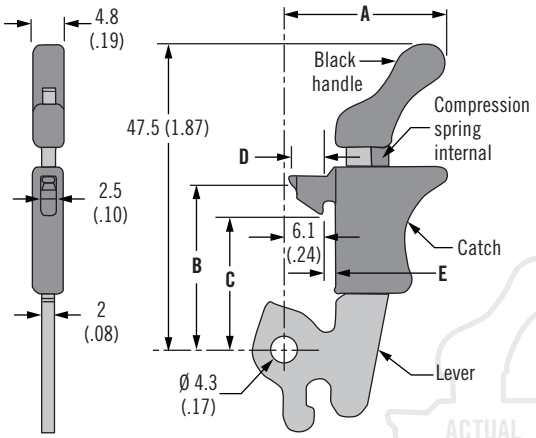

Panel thickness 2 - 2.5 (.078 - .098)

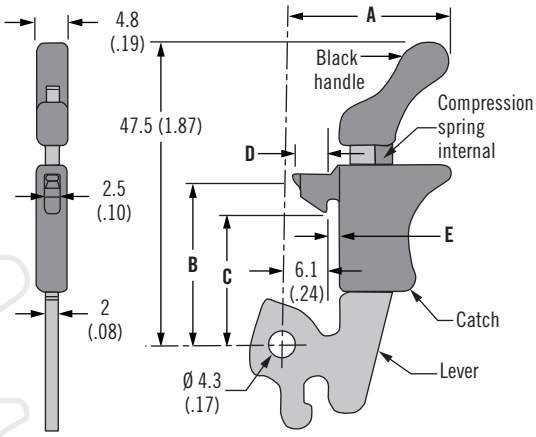

Plunger Style Switch

Panel thickness 0.8 - 1.5 (.031 - .059)

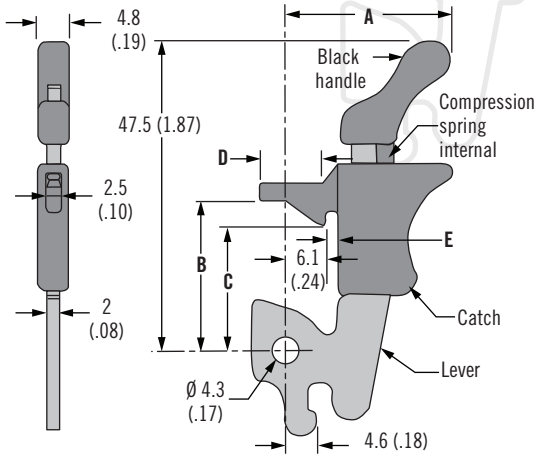

Panel thickness 2 - 2.5 (.078 - .098)

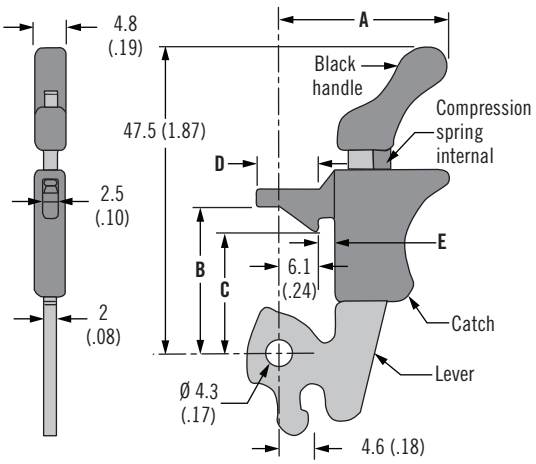

Style	Panel Thickness	Part Number	A	B	C	D	E
Lever style complete with u-bent washer	0.8 - 1.5 (.031 - .059)	P7-A-513-11	25.2 (.99)	26.1 (1.03)	20.8 (.82)	5.4 (.21)	1.9 (.07)
	2 - 2.5 (.078 - .098)	P7-A-523-11	26.2 (1.03)	26.1 (1.03)	20.8 (.82)	5.4 (.21)	2.9 (.11)
Plunger style complete with belleville washer	0.8 - 1.5 (.031 - .059)	P7-A-533-11	25.2 (.99)	23 (.90)	19 (.75)	9.6 (.38)	1.9 (.07)
	2 - 2.5 (.078 - .098)	P7-A-543-11	25.2 (.99)	23 (.90)	19 (.75)	9.6 (.38)	2.9 (.11)

U-Bent Washer (supplied)

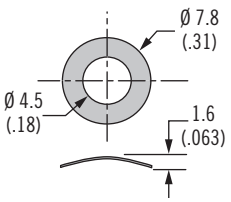

Belleville Washer (supplied)

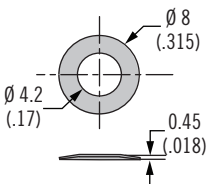

ACTUAL SIZE

Dimensions in millimeters (inch) unless otherwise stated

P7 *ATCA*® Inject / Eject Mechanism

Captive screws

Metal Version

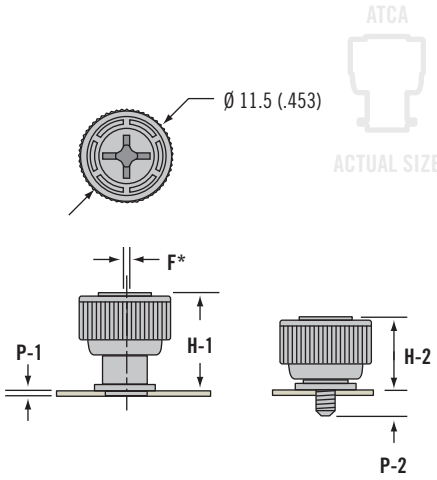

Overmolded Version

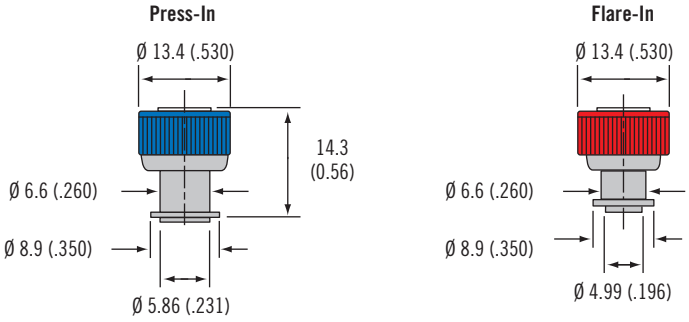

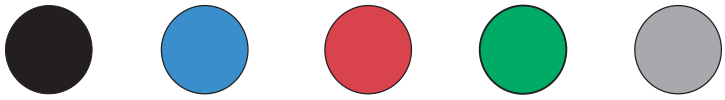

000 Black | **008** Blue | **013** Red | **014** Green | Your color (contact Southco)

- **M3 thread**
- **No. 2 Phillips recess**
- **Color match available**

Material and Finish

Screw, ferrule and internal spring stainless steel, knob aluminum or PC/ABS

Performance Details

Flammability rating: UL94-V0

ATCA® R3.0 compliant screw

Installation Notes

Please refer to installation drawings on page 577 for reference on dimensions **B***, **Ø D*** and **Ø Z***

F* indicates maximum float in the unfastened position

Part Number

See table

Specifying Color:

To indicate color, change the last three digits of the part number.

Example:

47-99-945-1P0-K000, black

47-99-945-1P0-K013, red

ATCA is a registered trademark of PICMG® - PCI Industrial Computer Manufacturers Group, Inc.

Series	Installation Method	Panel Thickness			Part Number	H-1	H-2	P-1	P-2	F*	Panel Preparation	
		A Min.	A Max.	B*	No. 2 Phillips						Ø D*	Ø Z*
ATCA compliant (Metal Version)	Press-in	0.9 (.036)	~	~	47-99-945-1P0	14.3 (.56)	10.1 (.40)	1.0 (.39)	5.0 (.20)	1 (.039)	5.95 ±0.04 (.234±.002)	3.2 $^{+0.2}_{-0.1}$ (.125 $^{+.008}_{-.004}$)
	Flare-in	0.8 (.031)	1.5 (.060)	0.4 (.016)	47-99-944-1F1	14.3 (.56)	10.1 (.40)	1.0 (.39)	5.0 (.20)	1 (.039)	5.1 $^{+0.1}_{-0}$ (.20 $^{+.004}_{-0}$)	3.0 $^{+0.1}_{-0}$ (.118 $^{+.004}_{-.000}$)
ATCA compliant (Overmolded Version)	Press-in	0.9 (.036)	~	~	47-99-945-1P0-K000	14.3 (.56)	10.1 (.40)	1.0 (.39)	5.0 (.20)	1 (.039)	5.95 ±0.04 (.234±.002)	3.2 $^{+0.2}_{-0.1}$ (.125 $^{+.008}_{-.004}$)
	Flare-in	0.8 (.031)	1.5 (.060)	0.4 (.016)	47-99-944-1F1-K000	14.3 (.56)	10.1 (.40)	1.0 (.039)	5.0 (.20)	1 (.039)	5.1 $^{+0.1}_{-0}$ (.20 $^{+.004}_{-0}$)	3.0 $^{+0.1}_{-0}$ (.118 $^{+.004}_{-.000}$)

P7 *ATCA*® Inject / Eject Mechanism

Guide pin

- **Bullet tip for better engagement**
- **Self-clinching style for easy installation**

Material and Finish

Stainless steel

Installation Notes

Edge of hole must be sharp – do not chamfer.

See page 577 for reference on usage of guide pin.

Self-clinching install details see page 627

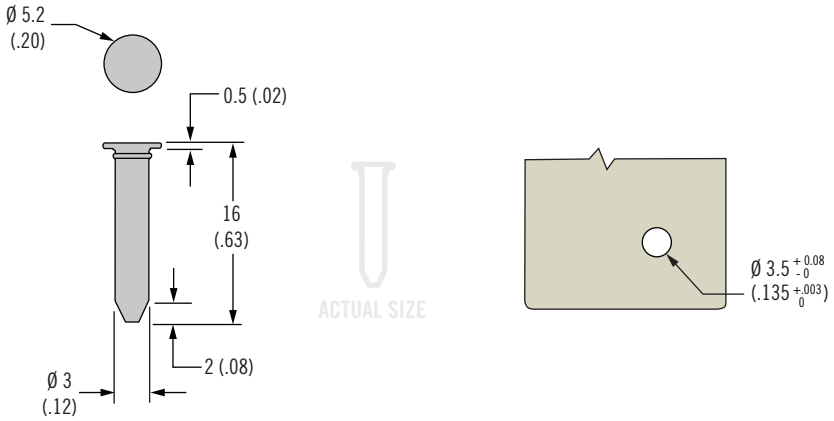

Part Number
77-0-40552

www.southco.com/P7

P7 *ATCA*® Inject/Eject Mechanism

Mounting screws M 2.5

- **Accommodates all standard *ATCA*® PC board thicknesses**
- **Vibration-resistant nylon patch**

Material and Finish

Steel zinc plated

Installation Notes

Please refer to installation drawings on page 577 for reference on usage of mounting screws

ATCA is a registered trademark of PICMG® - PCI Industrial Computer Manufacturers Group, Inc.

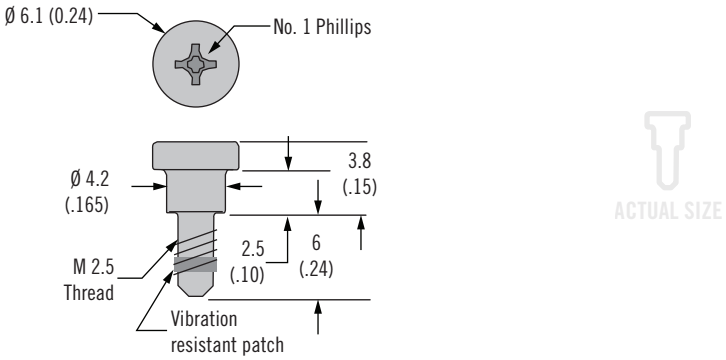

Part Number
P7-0-41665-1

www.southco.com/P7

Dimensions in millimeters (inch) unless otherwise stated

P7 *ATCA*® Inject / Eject Mechanism

Faceplate panel preparation (with PCB mounting tab fabrication)

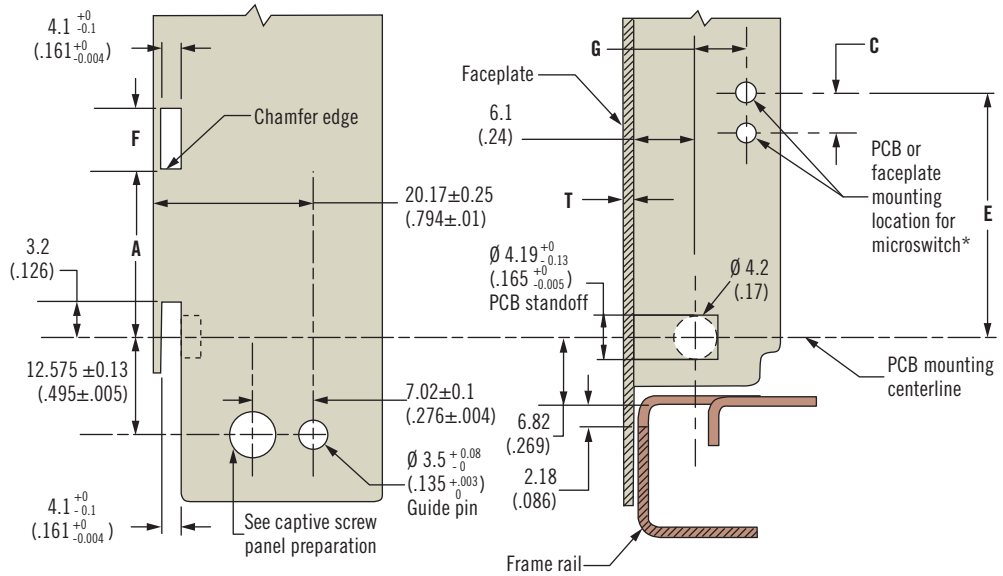

Switch Styles	Part Number	A	F	C	G	E	T
Lever	P7-A-513-11	22 (.866)	7.5 (.296)	4 (.16)	25.4 (1.0)	5.2 (.2)	0.8 - 1.5 (.031 - .059)
	P7-A-523-11	21.7 (.85)	7.8 (.31)				2 - 2.5 (.078 - .098)
Plunger	P7-A-533-11	20.2 (.795)	9 (.354)	3 (.12)	20.4 (.8)	1.9 (.07)	0.8 - 1.5 (.031 - .059)
	P7-A-543-11						2 - 2.5 (.078 - .098)

Captive Screw Panel Preparation and Installation (see page 575 for selection of captive screws)

Press-In

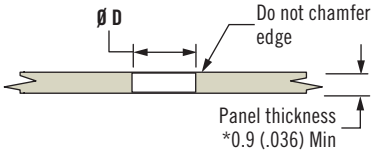

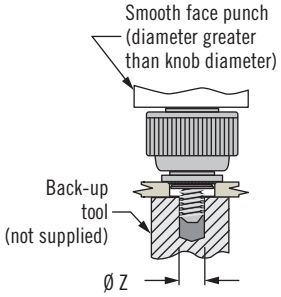

Flare-In

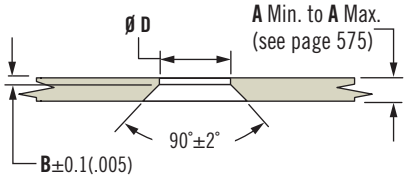

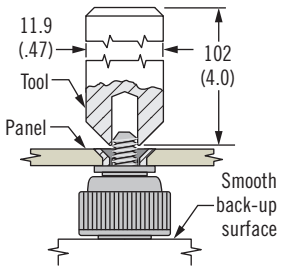

Flare-In Tool Part Number (M3 Thread Size)
47-104

Installation Notes

Select ejector, guide pin and mounting screw part number.

Select captive screw best suited to your application.

Notes

Faceplates generally require two ejectors, two captive screws, two mounting screws and two guide pins.

*Microswitch lever style operation ITT MD002 or plunger style operation ITT SD002

See page 575 for ejector selection

Installation Notes

See page 575 for **B, Ø D** and **Ø Z** dimensions.

Press-in:

1. Prepare panel as shown, do not chamfer edge.
2. Place standoff into installation hole.
3. Provide solid back-up behind hole with clearance hole for screw.
4. Press part into panel. Punch must not touch plastic knob during installation.

Recommended minimum distance from the panel edge to the centerline of the installation hole is 1.5 x Ø D. * For panels thinner than 0.9 (.036) contact Southco.

Flare-in

1. Prepare panel as shown.
2. Use light pressure to flare standoff, assuring parallel surfaces on the punch and installation tool. Installation force depends on screw size.
3. Punch cannot touch plastic during installation.

ATCA is a registered trademark of PICMG® - PCI Industrial Computer Manufacturers Group, Inc.

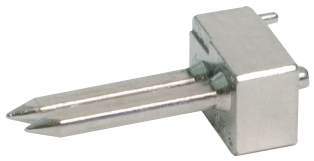

CN *ATCA*® Inject / Eject Mechanism

Alignment keying modules

- **CN-80 robust design passes the NEBS drop test**
- **Multiple pin positions ensure proper board mating**

Material and Finish

Dual pin CN68 and CN78:
Zinc alloy, nickel plated

Dual pin CN80:
Zinc alloy, hardened steel, nickel plated

Single pin:
Brass, nickel plated

Notes

Keying module rotation position must mate with receptacle module rotation position

ATCA is a registered trademark of PICMG® - PCI Industrial Computer Manufacturers Group, Inc.

Dual Pin - A1 Backplane - A2 Midplane

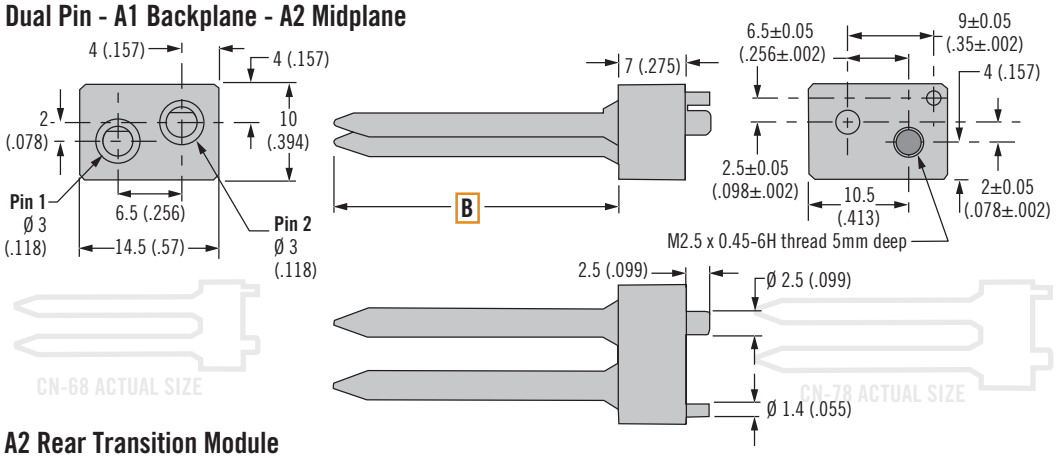

A2 Rear Transition Module

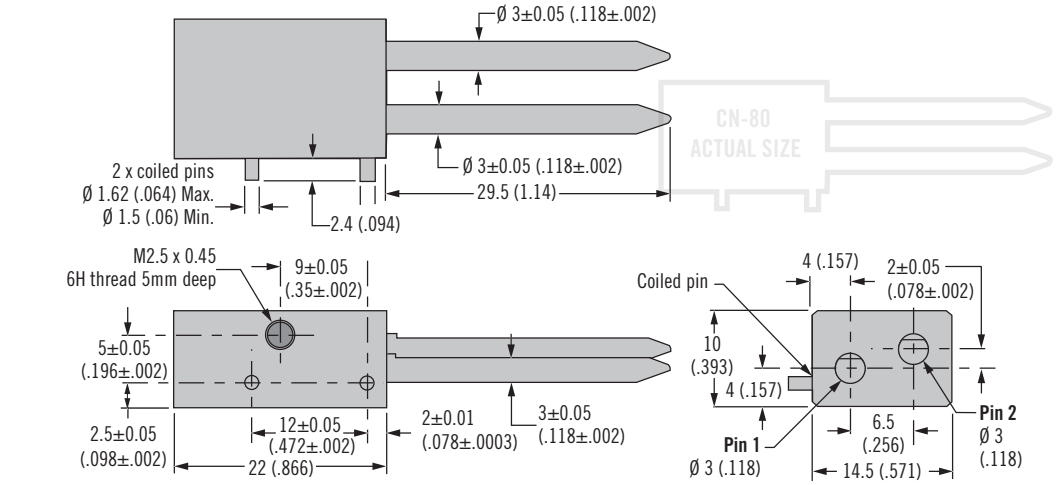

Dual Pin Part Number

CN - B - X - Y

B Pin length
68 A1 backplane 22.5 (.885)
78 A2 midplane 29.5 (1.16)

A2 Rear Transition Module Part Number

CN - 80 - X - Y

X Pin 1 Position / Y Pin 2 Position	Rotation	Keying Position
1	0°	
2	45°	
3	90°	
4	135°	
5	180°	
6	225°	
7	270°	
8	315°	

Single Pin - A1 Backplane

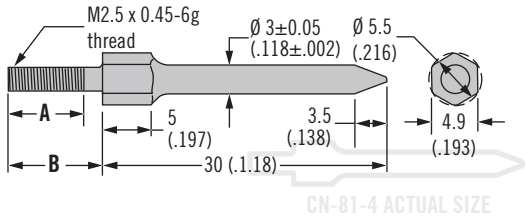

Single Pin Part Number	A	B
CN-81-4	4 (.157)	6 (.236)
CN-81-6	6 (.236)	8 (.315)
CN-81-8	8 (.315)	10 (.394)

Dimensions in millimeters (inch) unless otherwise stated

CN *ATCA*® Inject / Eject Mechanism

Alignment receptacle modules

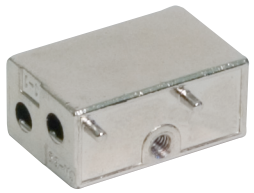

K1 - K2 Front Board

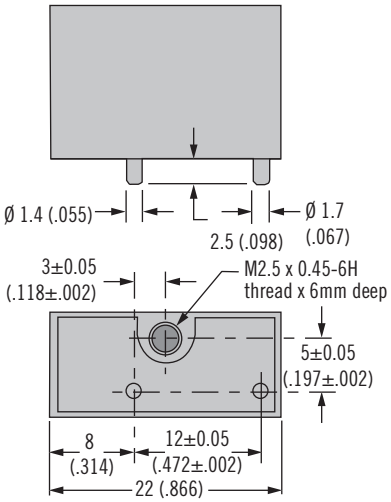

CN - 69 - X - Y

X Receptacle 1 Position Y Receptacle 2 Position	Rotation	Receptacle Position
1	0°	
2	45°	
3	90°	
4	135°	
5	180°	
6	225°	
7	270°	
8	315°	
9	N/A	
0	N/A	

rK1 Rear Transition Module

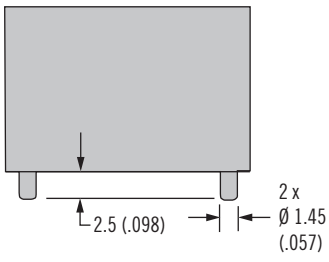

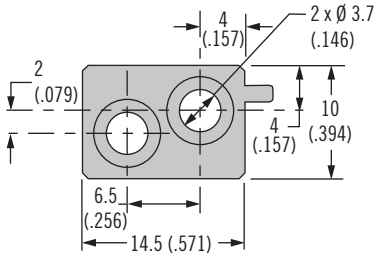

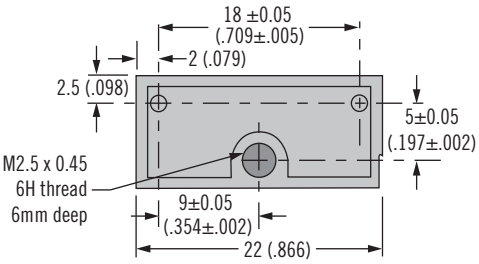

Part Number
CN-79

- **Mates with pins**

Material and Finish

Zinc alloy, nickel plated

Notes

Receptacle module rotation position must mate with keying module rotation position

ATCA is a registered trademark of PICMG® - PCI Industrial Computer Manufacturers Group, Inc.

P7 *CompactPCI*® Inject / Eject Mechanism

Ejectors

- **Ergonomic design for easy operation**
- **Button protected to prevent accidental operation**
- **Button disengages microswitch prior to rotation of ejector handle**
- **Optional integrated microswitch**

Material and Finish

Ejector base and jaws:
Zinc alloy, nickel plated
Ejector cover: PC/ABS black
Ejector button: PC/ABS red
Torsion spring: Stainless steel
Pin and faceplate mounting screws:
Steel, zinc plated

Performance Details

Flammability rating: UL94-V0

CompactPCI is a registered trademark of PICMG® - PCI Industrial Computer Manufacturers Group, Inc.

Upper Ejector

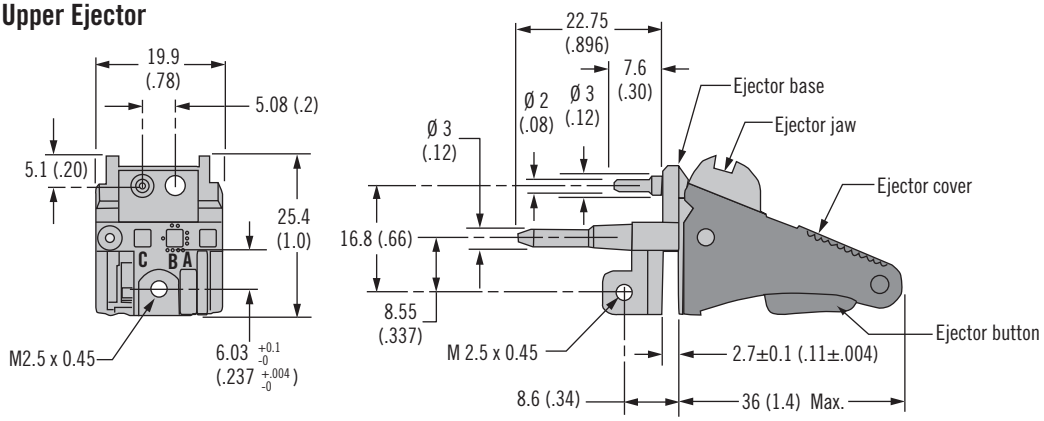

Part Number
P7-1-981-10

Lower Ejector (for use with microswitch)

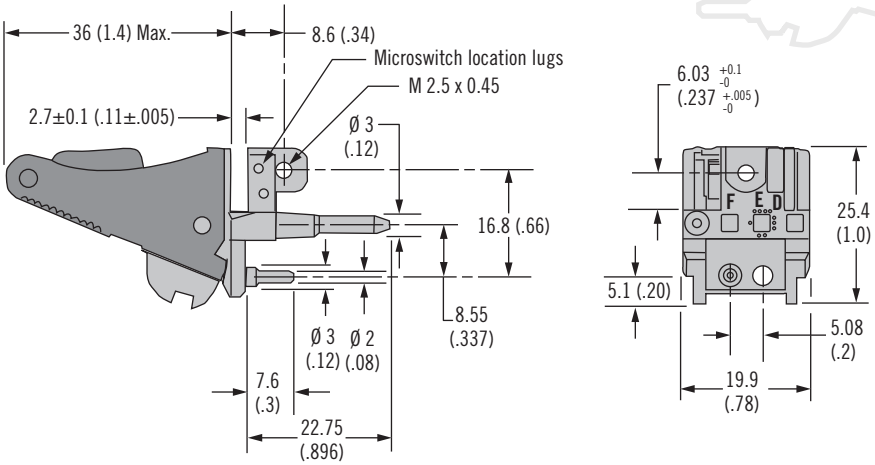

Part Number
P7-1-991-10

Faceplate Travel

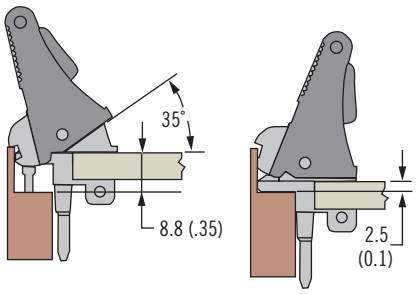

Note: 6.3 (0.24) total travel

Dimensions in millimeters (inch) unless otherwise stated

P7 *CompactPCI*® Inject / Eject Mechanism

Faceplate mounting hardware accessories

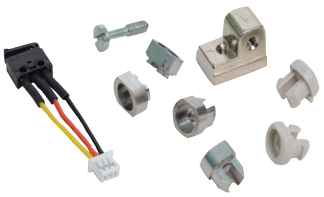

Faceplate Preparation 6U and 9U

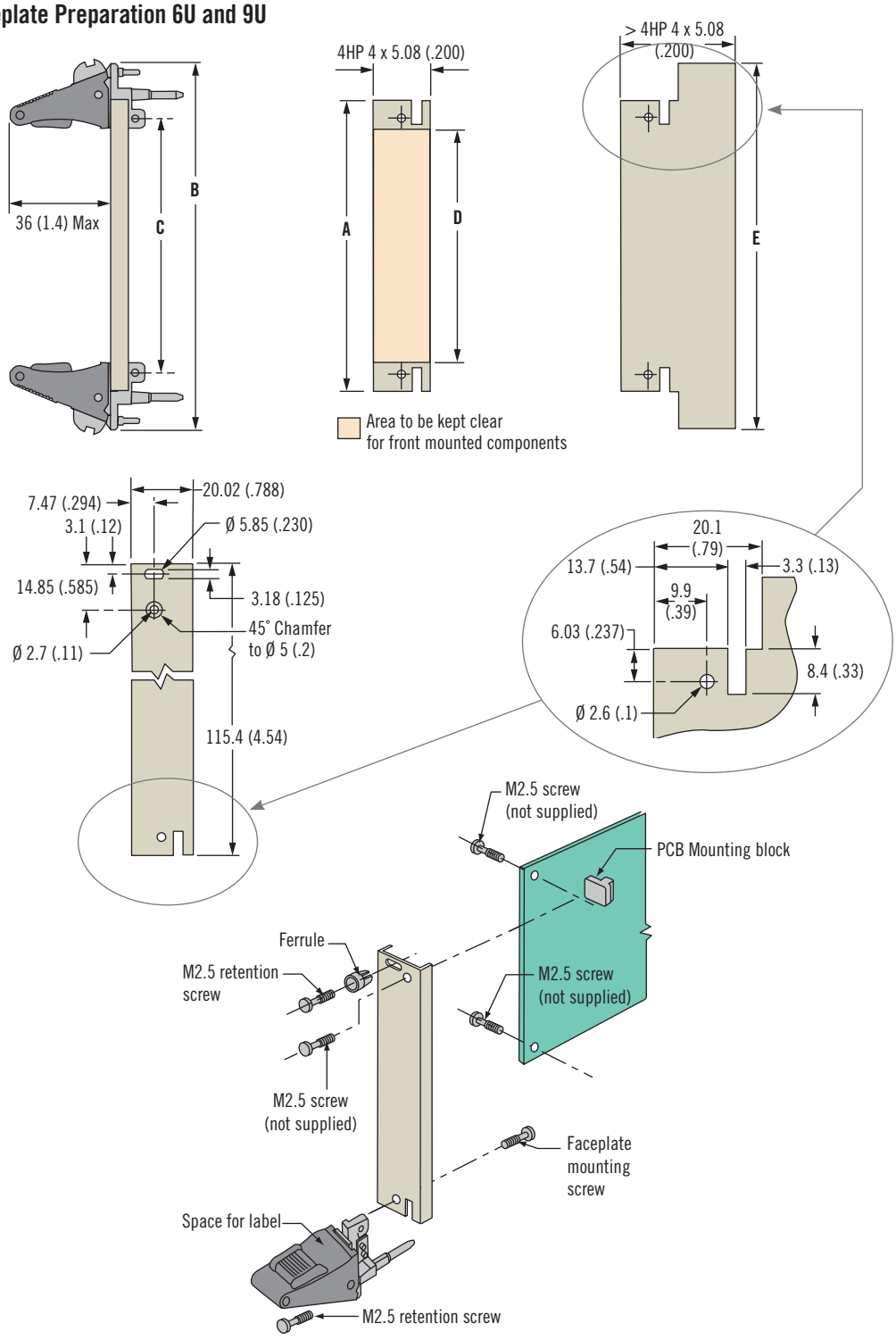

Style	A	B	C	D	E
6U	235.4 (9.27)	255.85 (10.073)	222.25 (8.750)	214.65 (8.451)	262.05 (10.317)
9U	368.75 (14.518)	389.2 (15.323)	355.6 (14.00)	348 (13.701)	395.4 (15.567)

Microswitch assembly:
Attaches to ejector, allows for hot swap
Part number: P7-0-46720

M2.5 Retention screw:
Used with ferrules and ejectors
Material and finish: Steel, plated
Part number: P7-0-45297

3U Hardware
Captivates M2.5 screw on faceplate

Snap-in ferrule:
Faceplate thickness
1.6 - 2.5 (.063 - .098)
Material and finish: ABS
Part number: P7-0-45227

Press-in ferrule:
Faceplate thickness
1.5 - 2.4 (.059 - .094)
Material and finish: Steel, plated
Part number: P7-0-45302

Press-in ferrule flush:
Minimum panel thickness 0.9 (.035)
Material and finish: Steel, plated
Part number: P7-0-45244

PCB Mounting block:
Used to mount PCB in place of ejector
Material and finish: Zinc alloy, plated
Part number: P7-0-45234

Notes
All panel preparation tolerances ±0.1 (.004)

CompactPCI is a registered trademark of PICMG® - PCI Industrial Computer Manufacturers Group, Inc.

Dimensions in millimeters (inch) unless otherwise stated

P7 *AdvancedMC®* Inject / Eject Mechanism

Module handle & light pipe bracket panel preparation

- **Die-cast construction for robust performance**
- **Handle operation controls hot swap activation**
- **Handle retention feature prevents accidental operation**
- **For use with Carriers supporting 4 Full-size AMC Modules**

Material and Finish

Handle: Zinc alloy, black chrome
Lever: Zinc alloy, bright chromate
Pivot screw, Drag spring: Steel, zinc plated
Shoulder screw, U-bent washer: Stainless steel, passivated

Performance Details

Flammability rating: UL94-V0

Installation Notes

See page 583

Upper Handle Assembly

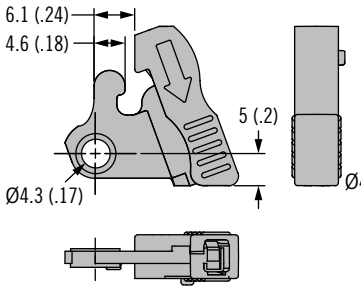

Lower Handle Assembly

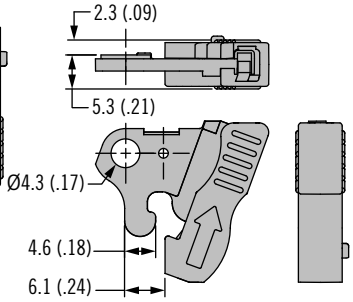

Switch Arm

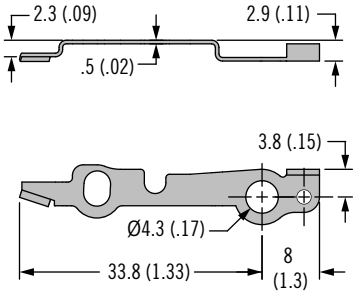

Pivot Screw (2 supplied)

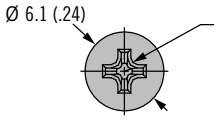

Shoulder Screw (supplied)

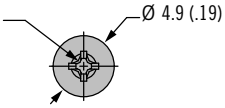

U-Bent Washer (2 supplied)

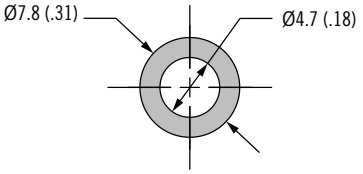

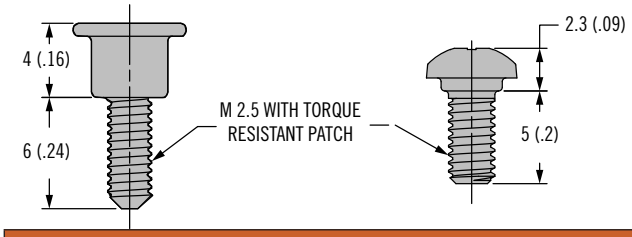

Part Number
P7-C-701
Part Number includes Upper and Lower Handle Assemblies, Switch Arm, Pivot Screws, Shoulder Screw and U-Bent Washers as shown

Panel Preparation

Upper handle location

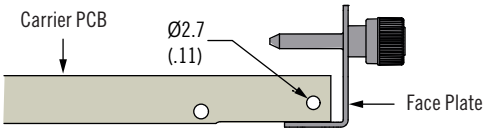

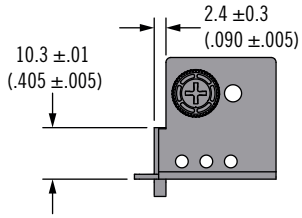

Lower handle location

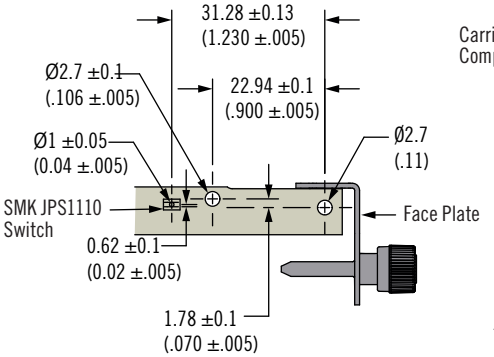

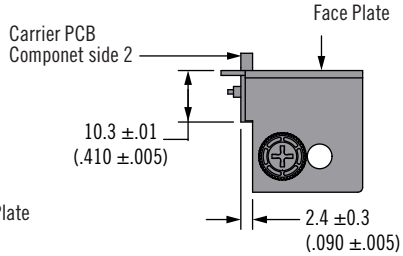

* Captive Screws Sold Separately, See p495

AdvancedMC is a registered trademark of PICMG® - PCI Industrial Computer Manufacturers Group, Inc.

Dimensions in millimeters (inch) unless otherwise stated

southco®

P7 *AdvancedMC*® Inject / Eject Mechanism

Installation and operation

Installation

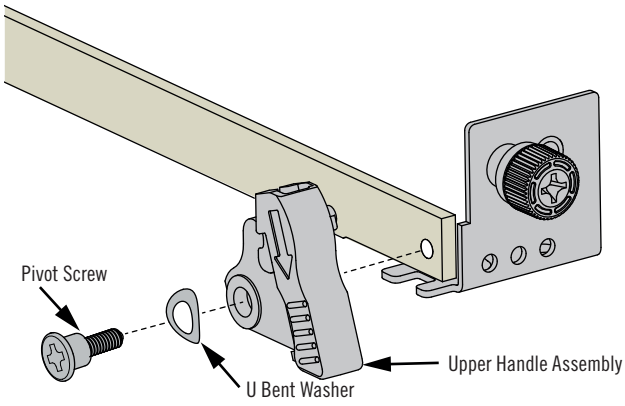

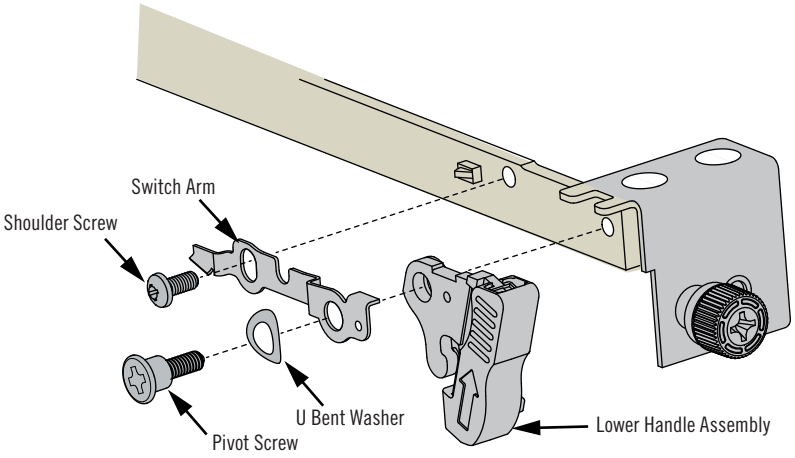

Tap M2.5 Threads into Carrier (not shown) to accept Pivot Screw and Shoulder Screw

Tighten screws to 45-60N·cm

Operation

Handle stowed, carrier inserted, Hot swap switch activated

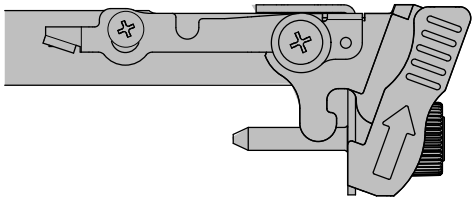

Handle extended, carrier inserted,
Hot swap switch activated

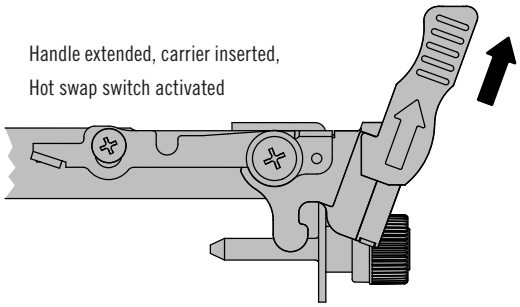

Handle extended, carrier inserted, Hot swap switch de-activated

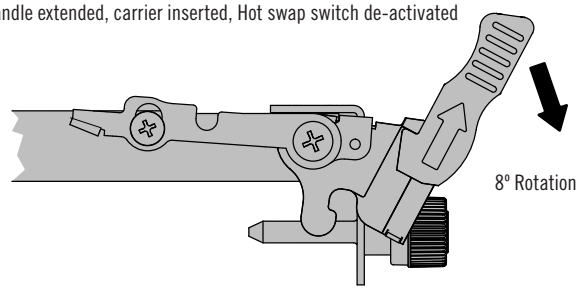

Handle extended, carrier extracted, Hot swap switch de-activated

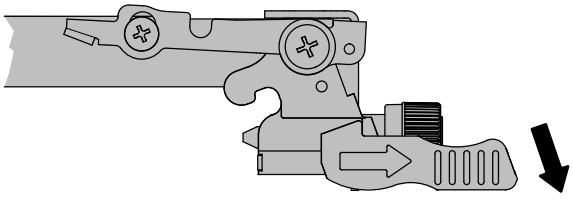

AdvancedMC is a registered trademark of PICMG® - PCI Industrial Computer Manufacturers Group, Inc.

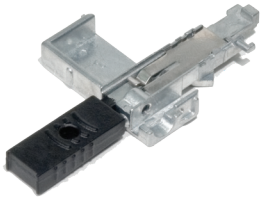

P7 *AdvancedMC*® Inject / Eject Mechanism

Pull module handle

- **Die-cast construction for robust performance**
- **Positive detent at three distinct positions**
- **Fits all current microswitch locations**
- **Custom colors available**

Material and Finish

Handle/shaft, housing and catch: Zinc alloy, bright chromate

Notes

*Order light pipes separately

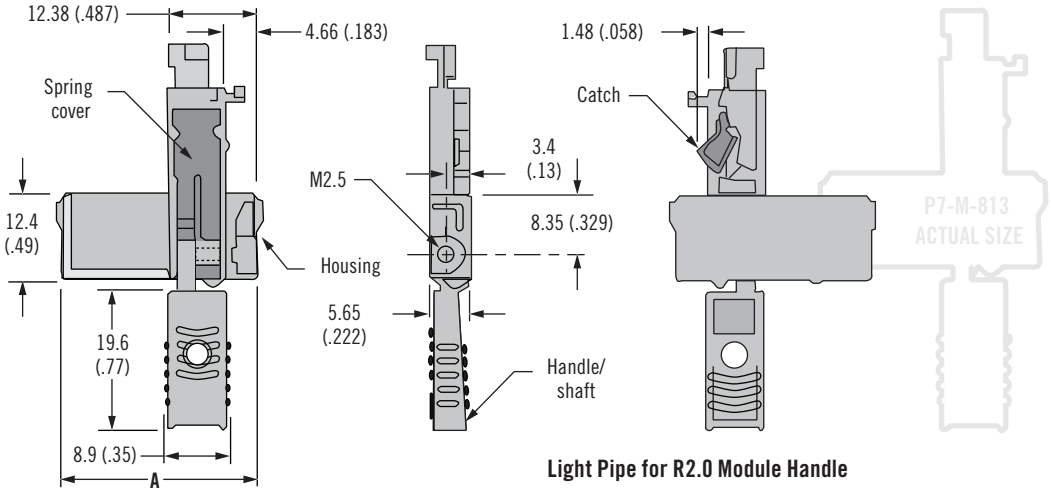

Part Number		Handle Size	A
Module handle	R2.0 Light pipe*		
P7-M-811-000	P7-10-812	Compact 3HP	12.50 (.492)
P7-M-812-000	P7-10-812	Mid size 4HP	17.55 (.691)
P7-M-813-000	P7-10-812	Full size 6HP	27.55 (1.085)

Light Pipe for R2.0 Module Handle

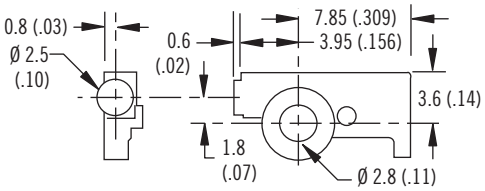

www.southco.com/P7

P7 *AdvancedMC*® Inject / Eject Mechanism

Flush module handle

- **Flush button prevents snagging of handle**
- **Flush button allows for better aesthetics**
- **Locking pin feature**

Material and Finish

Handle/shaft: Zinc alloy, black epoxy coat

Housing, cover and catch: Zinc alloy, bright nickel plate

Light pipe: Polycarbonate clear

AdvancedMC is a registered trademark of PICMG® - PCI Industrial Computer Manufacturers Group, Inc.

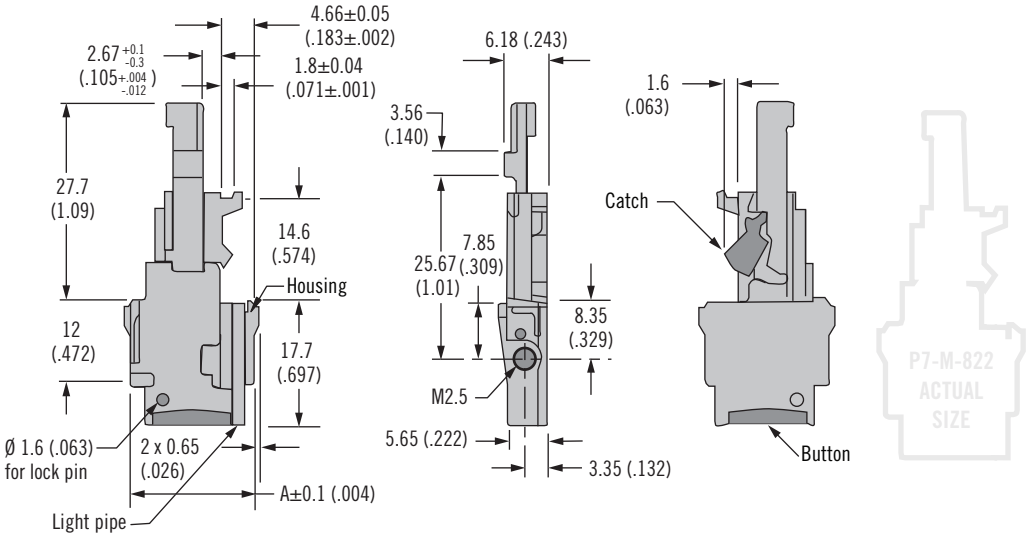

Part Number	Handle Size	A
P7-M-822	Mid size 4HP	17.55 (.691)
P7-M-823	Full size 6HP	27.55 (1.085)

Dimensions in millimeters (inch) unless otherwise stated

www.southco.com/P7

southco®

P7 *AdvancedMC®* Inject / Eject Mechanism

Operation

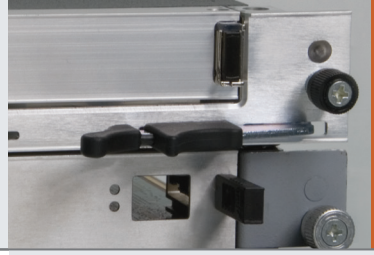

Operation

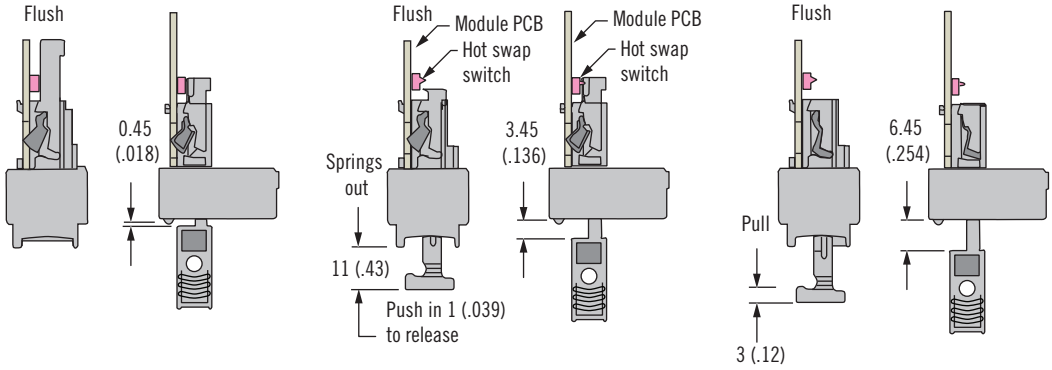

Module Latched Switch Actuated

Module Latched Switch Released

Module Unlatched Switch Released

www.southco.com/P7

P7 *AdvancedMC®* Light Pipe Bracket

R2.0

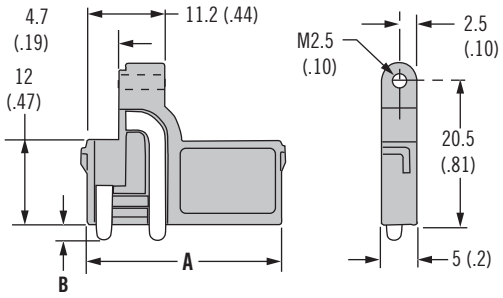

Part Number	Bracket Size	A	B
P7-L-811	Compact	12.50 (.492)	2.1 (.08)
P7-L-812	Mid size	17.55 (.691)	
P7-L-813	Full size	27.55 (1.085)	
P7-L-811-11	Compact flush	12.50 (.492)	0.3 (.012)
P7-L-812-11	Mid size flush	17.55 (.691)	
P7-L-813-11	Full size flush	27.55 (1.085)	

- **Easily snaps into faceplate**
- **Bracket includes light pipe and housing**
- **Compatibility with all standard Advanced MC® faceplates**

Material and Finish

Light pipe housing: Zinc alloy, bright chromate
Light pipe: Polycarbonate, clear

Notes

For R1.0 light pipe bracket go to www.southco.com

AdvancedMC is a registered trademark of PICMG® - PCI Industrial Computer Manufacturers Group, Inc.

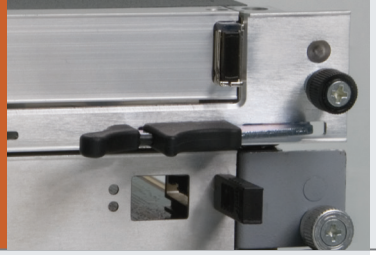

P7 *AdvancedMC®* Inject / Eject Mechanism

Module handle & light pipe bracket panel preparation

Installation Notes

1. Snap handle assembly and light pipe bracket into faceplate.
2. For R2.0, position blue LED light pipe into handle assembly and faceplate. Light pipe should be positioned against outside wall of handle assembly.
3. Slide PCB in place and secure with screws. Blue LED light pipe is located on component side 2 of the PCB.

Notes

All panel preparation tolerances ±0.1 (.004)

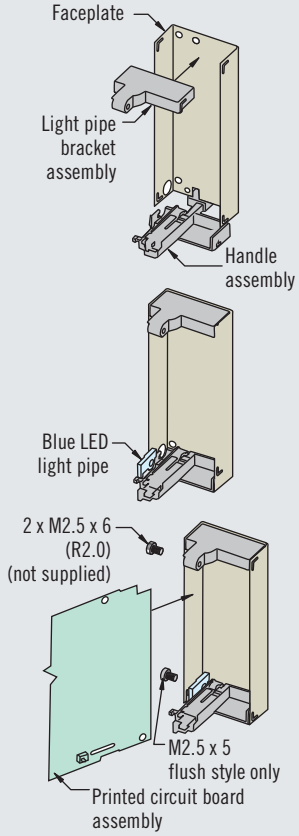

AdvancedMC is a registered trademark of PICMG® - PCI Industrial Computer Manufacturers Group, Inc.

Panel Preparation Light Pipe Brackets

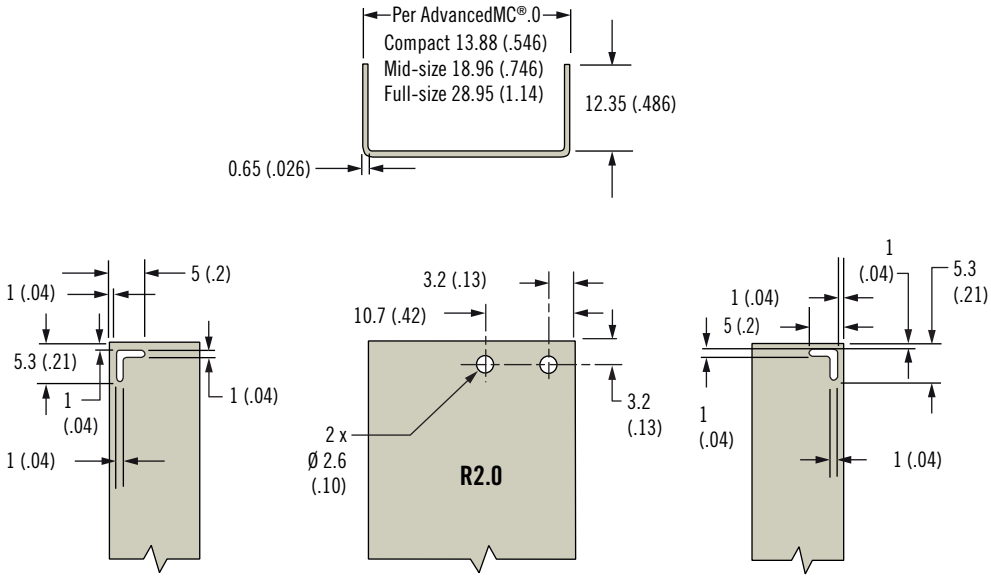

Panel Preparation Module Handles

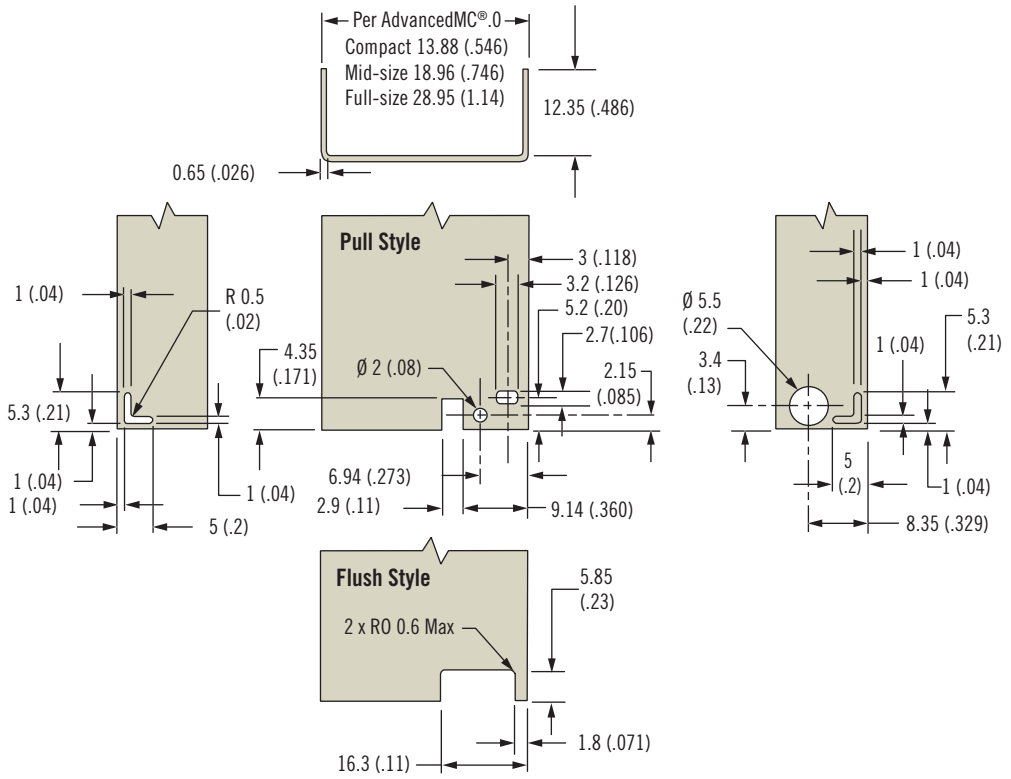

Dimensions in millimeters (inch) unless otherwise stated

PCB Preparation

Printed Circuit Board Component Side 1

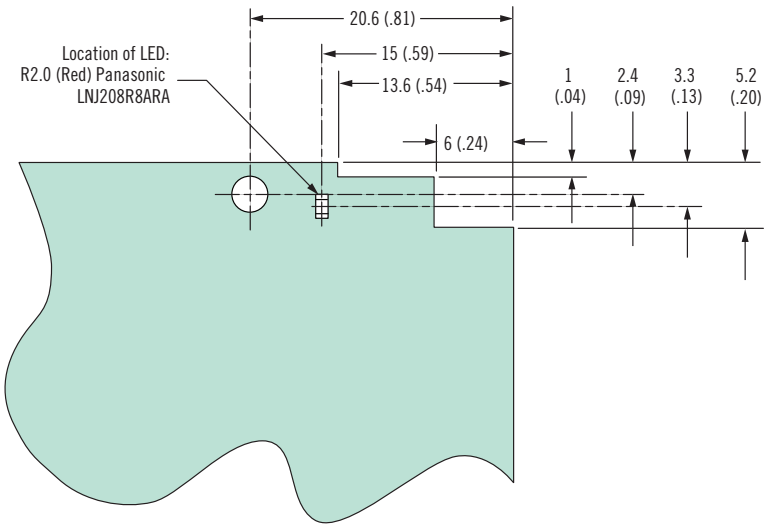

Printed Circuit Board Component Side 2

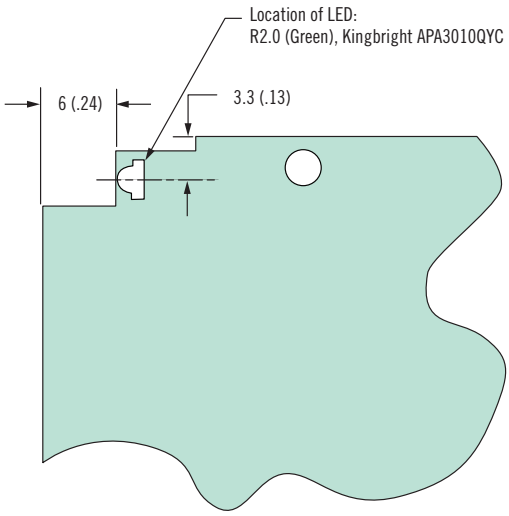

Printed Circuit Board Component Side 1

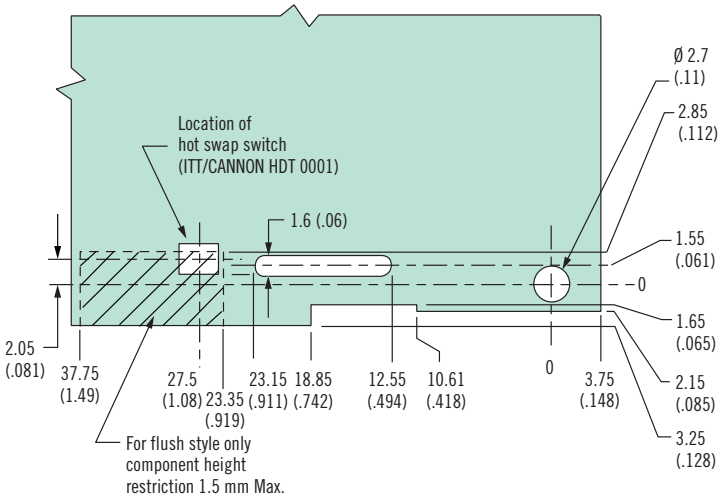

Printed Circuit Board Component Side 2

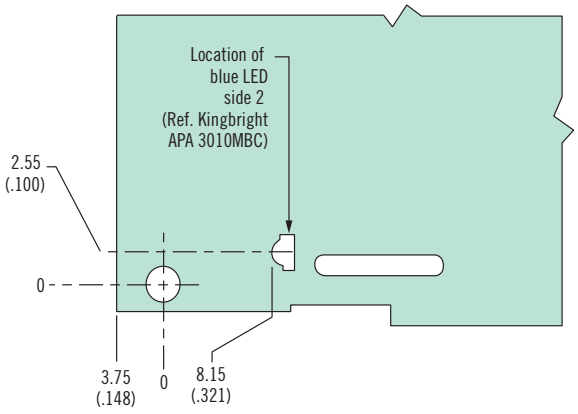

AdvancedMC is a registered trademark of PICMG® - PCI Industrial Computer Manufacturers Group, Inc.

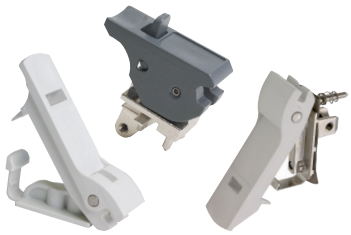

CN Inject / Eject Mechanism

Ejectors

Material and Finish

Module ejector:
Lever and slide:
Glass-filled nylon, white
Base: Die-cast zinc, nickel plated
Pin and spring: Stainless steel, passivated

Blanking panel ejector:
Lever: Glass-filled nylon, white
Base: Polycarbonate, white
Pin: Stainless steel, passivated

Mini module ejector:
Lever and catch:
Polycarbonate, gray
Base: Die-cast zinc, natural
Pin: Stainless steel, passivated

Performance Details

Flammability rating: UL94-V0 rated plastic components

Module Ejector

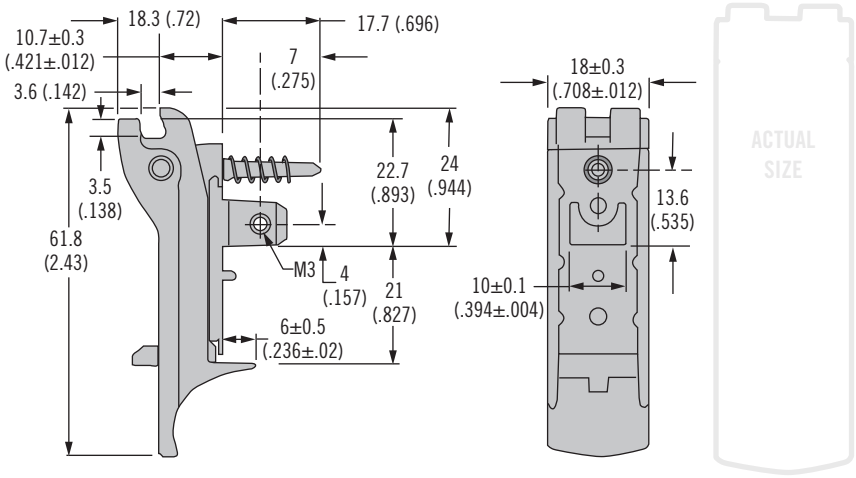

Blanking Panel Ejector

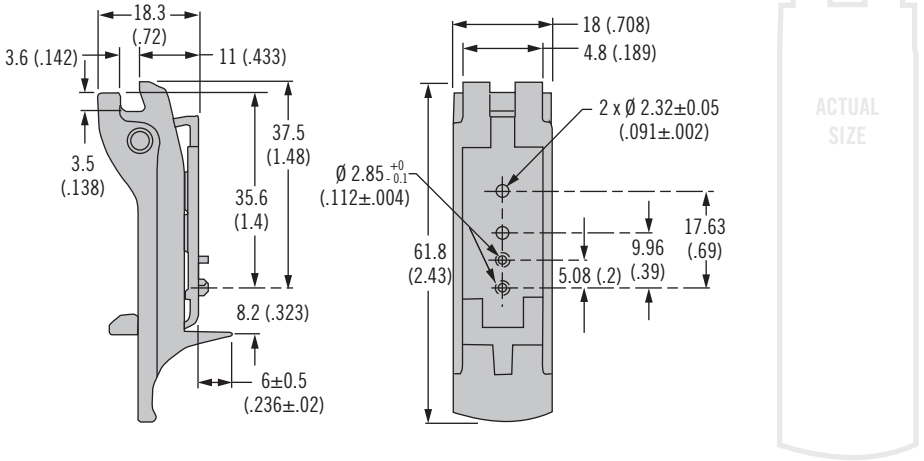

Mini Module Ejector

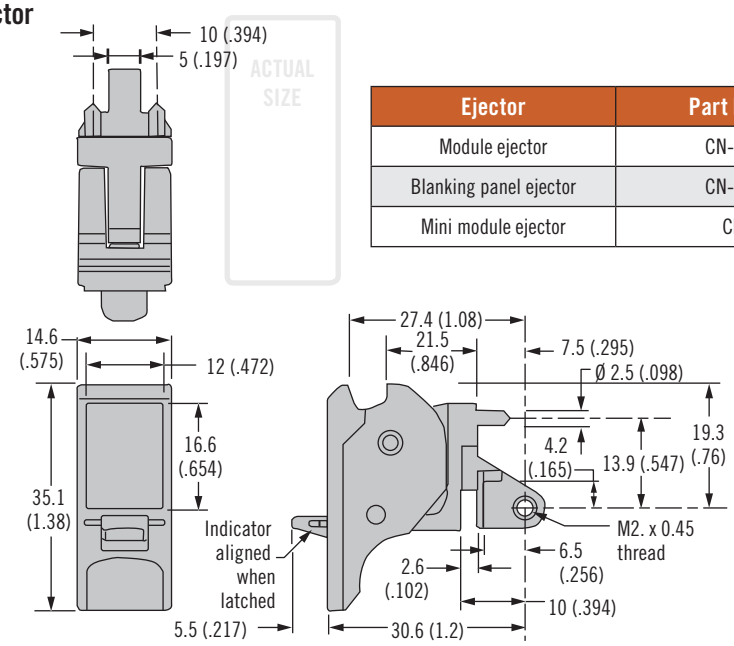

Ejector	Part Number
Module ejector	CN-10-3-A
Blanking panel ejector	CN-10-9-A
Mini module ejector	CN-11

Dimensions in millimeters (inch) unless otherwise stated

Handle

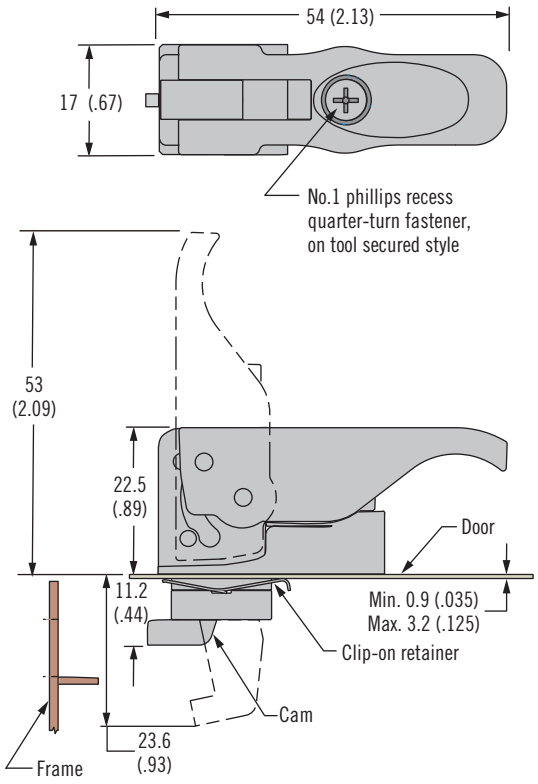

Part Number			
Panel Thickness	Non Tool Secured	Tool Secured	Secondary Catch
0.9 - 1.6 (.035 - .063)	P7-1-301-15	P7-1-302-15	P7-1-303-15
1.7 - 2.4 (.067 - .094)	P7-1-301-25	P7-1-302-25	P7-1-303-25
2.5 - 3.2 (.098 - .125)	P7-1-301-35	P7-1-302-35	P7-1-303-35

Flush

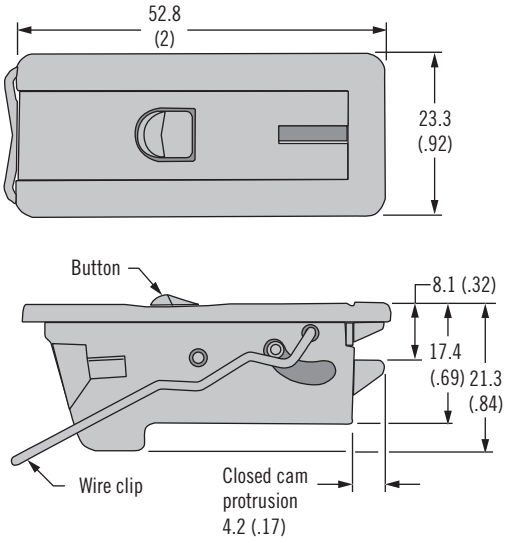

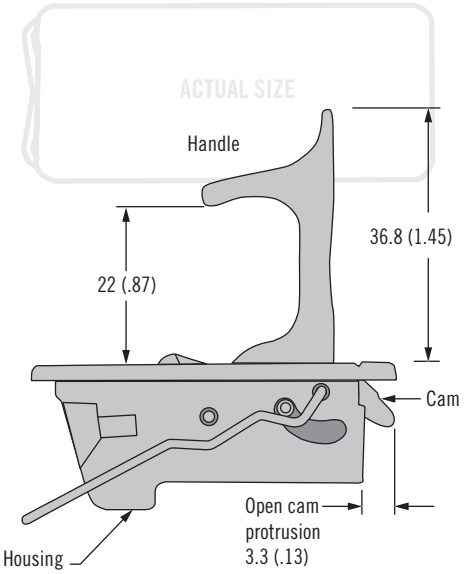

Part Number
P7-99-103-53

Material and Finish

Handle
Housing, lever: Polyester, black
Cam: Low carbon steel, zinc plated, chromate plus sealer
Pins: 302 Stainless steel, passivated
Clip-on retainer: 301 Stainless steel, passivated

Flush:
Housing, button and handle: Die-cast zinc, black powder coated
Cam: Steel, black zinc phosphate
Wire clip, torsion springs and pins: Stainless steel, natural

P7-M2 SSD (solid-state drive) Inject/Eject Mechanism

M.2 Form Factor

- **Intuitive operation with push to close and press button to release function**
- **Toolless installation with rotate to locked and unlocked position**
- **Colour button to your industry standard**
- **Special rib design on housing to avoid wobbling**

Material and Finish

Button: PC/ABS
Housing: Nylon

Performance Details

Flammability rating: UL-94-V2
Allow ±10% tolerance of your PC board thickness

Installation Notes

See page

Part Number

See table

Module Ejector

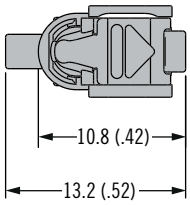

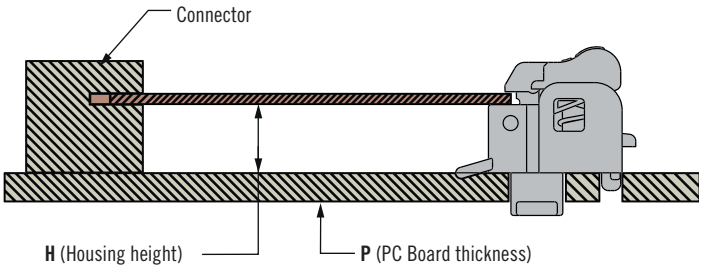

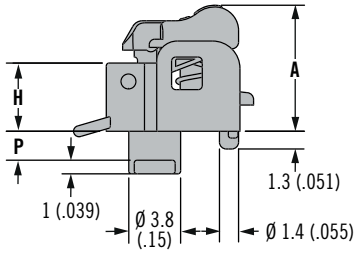

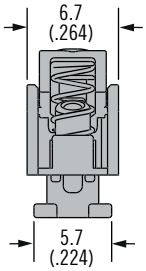

To Install: Insert latch through keyhole and rotate 90° until locking tab enters hole.

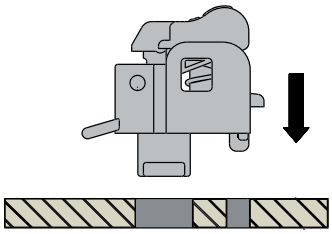

M2 Board: Notch to lock board to latch.

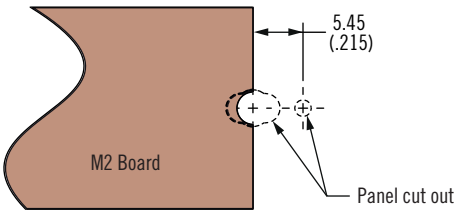

To Remove: Lift locking tab and rotate latch 90°

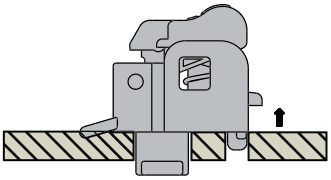

PC Board: Prepare keyhole and locking tab hole.

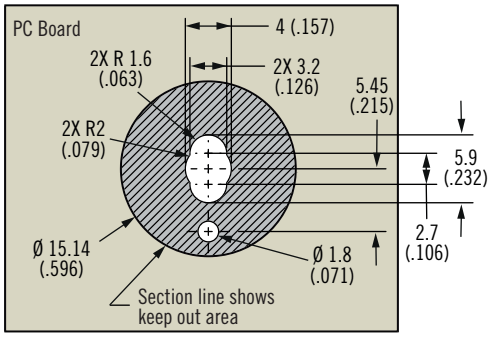

Part Number	Housing Height (H)	PC Board Thickness (P)	Height (A)
P7-M2-24-160-008	2.45 (.096)	1.6 (.063)	6.7 (.263)
P7-M2-24-210-008	2.45 (.096)	2.1 (.082)	6.7 (.263)
P7-M2-24-240-008	2.45 (.096)	2.4 (.094)	6.7 (.263)
P7-M2-50-193-008	5 (.196)	1.93 (.076)	9.24 (.363)
P7-M2-50-236-008	5 (.196)	2.36 (.093)	9.24 (.363)
P7-M2-66-213-008	6.6 (.259)	2.13 (.084)	10.8 (.425)

Dimensions in millimeters (inch) unless otherwise stated

HH Sliding Cover Latch

Pop-up function · Secondary Latch · Flush

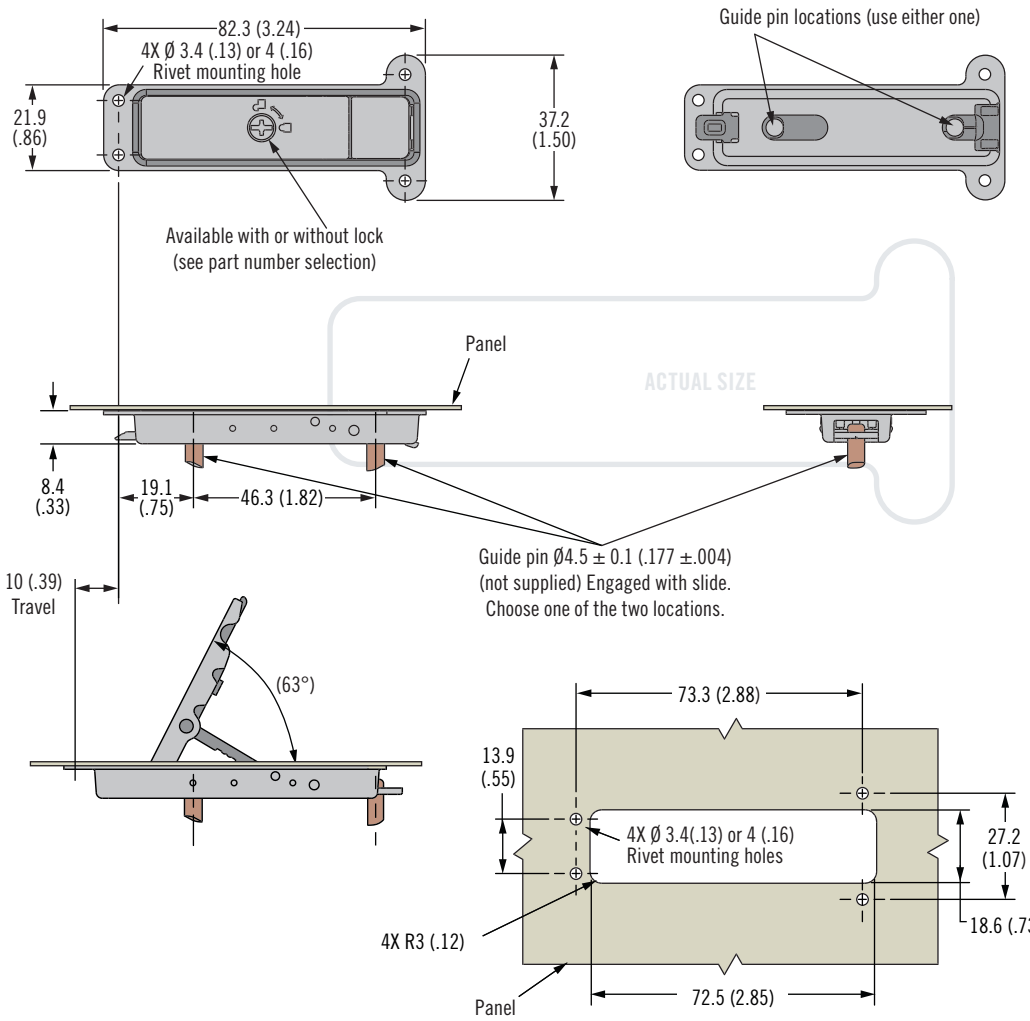

- **Intuitive operation with pop up handle**
- **Convenient installation with a dual engagement hole mounting design**
- **Carbon steel slide**

Material and Finish

Cup: Steel, zinc plated
Lever: Zinc alloy, powder coated
Button: Glass reinforced nylon

Performance Details

Max. working load on side: 100 N
Operating temperature range:
-40°C to 40°C
Flammability rating: UL-94-V0

Installation Notes

Install assembly with
Ø 3.4 (13) or 4 (.16) rivets

Part Number

See table

HH - C L - H - B

B **Button Color**
000 Black
008 Blue
059 Green

H **Lever Finish**
5 Black Powder Coated
6 Sliver Powder Coated

L **Locking Option**
0 With Lock/Stud
5 Without Lock/Stud

C **Cup Style**
4 Ø 3.4 (.13) Rivet Hole
5 Ø 4 (.16) Rivet Hole

HANDLES AND PULLS

Pulls

Pages 594-599

Flush mount pull designs provide ergonomic grip without protruding hardware disrupting door, drawer, or panel surfaces.

- Concealed styles rotate outward to provide a fully accessible handgrip
- All styles install easily in a single mounting hole

P2

P1

67

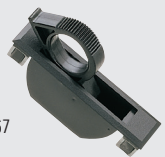
67

MP

SOUTHCO® handles install quickly and easily to provide comfortable ergonomic grip points for opening enclosure doors or drawers, and for removing mounted panels.

- Available in a variety of styles and strength options
- A variety of standard lengths to provide the appropriate grip required for the size of the door, drawer, or rack

Handles

Page 600-604

B8

P9

B8

B4

P8

P2 Flush Pull

Low profile · Lift or pull · Single hole mount

- **Snap-in installation**
- **2 sizes**

Material and Finish

ABS plastic, black

Performance Details

Maximum static load:
Lifting / pulling: 1300 N (300 lbf)

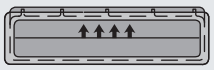

Pushing / sliding: 450 N (100 lbf)

Flammability rating:
UL94-HB or UL94-V0

Operating temperature range:
-50°C (-60°F) to 60°C (140°F)

Notes

Performance details are based on installation in a 1.2 (.048) thick steel door. Maximum loads are limited by door strength.

Small

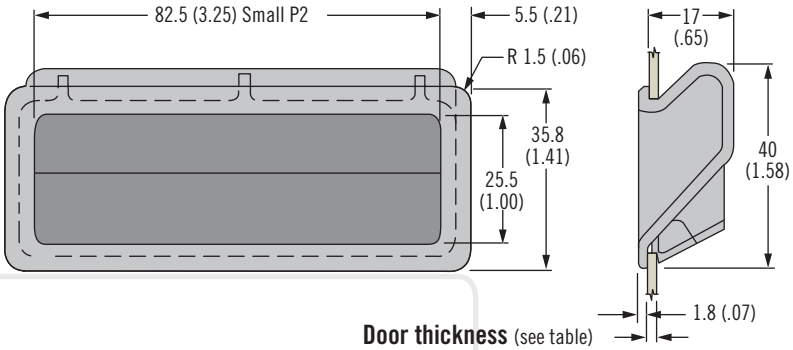

Large

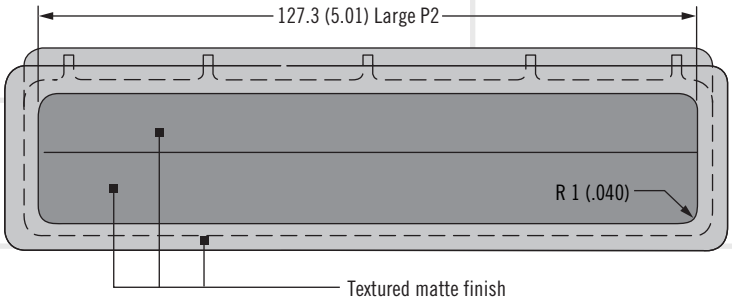

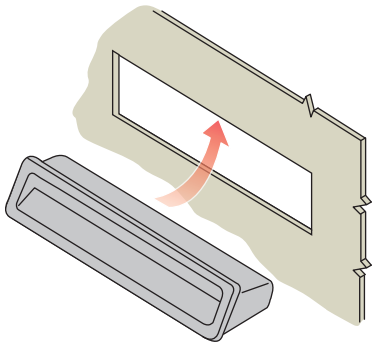

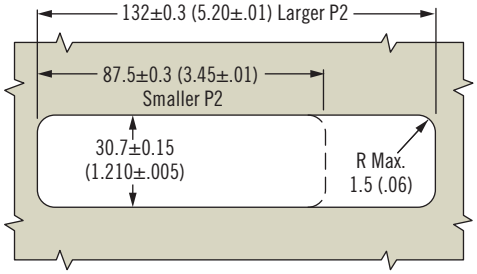

Part Number Selection

Door Thickness Range		Part Number			
		Small		Large	
Min.	Max.	UL94-HB	UL94-V0	UL94-HB	UL94-V0
1.0 (.040)	1.4 (.055)	P2-41	P2-41-1	P2-51	P2-51-1
1.4 (.055)	1.8 (.070)	P2-42	P2-42-1	P2-52	P2-52-1
1.8 (.070)	2.1 (.085)	P2-43	P2-43-1	P2-53	P2-53-1
2.1 (.085)	2.5 (.100)	P2-44	P2-44-1	P2-54	P2-54-1

Dimensions in millimeters (inch) unless otherwise stated

P2 Flush Pull - Lockable

Low profile · Lift or pull · Single hole mount

Type B (Counter-Clockwise) Version Shown

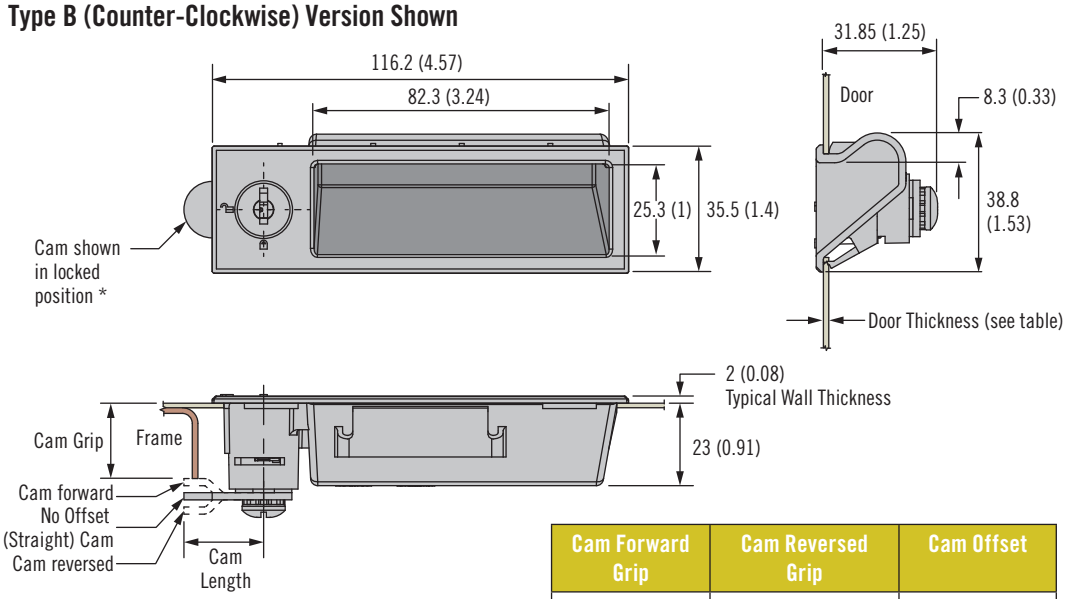

Cam Forward Grip	Cam Reversed Grip	Cam Offset
25 (0.98)	25 (0.98)	No Offset
21.8 (0.86)	28.2 (1.11)	3.2 (0.13)
18.6 (0.73)	31.4 (1.24)	6.4 (0.25)
15.5 (0.61)	34.5 (1.36)	9.5 (0.38)

* Cam Ordered Separately

For Cam Part Numbers and options see our Handbook page 199 or www.southco.com

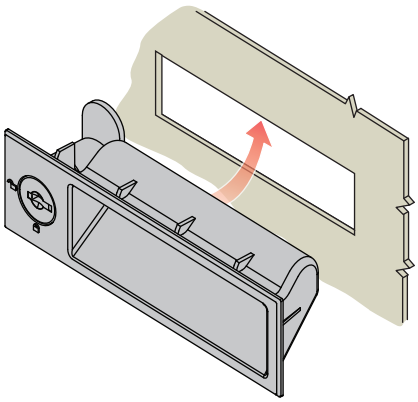

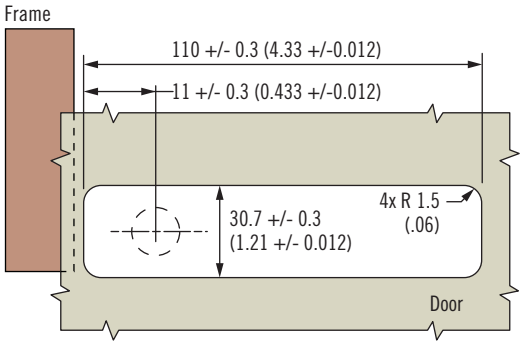

- **Snap-in installation**
- **Lockable**
- **Lock core included or sold separately**
- **Cam sold separately**

Material and Finish

Pull: ABS plastic, black

Lock parts:
Zinc alloy, powder coated. Brass. Steel, zinc plated. Buna-N

Flammability Rating
UL94-HB or UL94-V0 (See table)

Notes

For pulls without lock core, lock core sold separately, see page 190.

Cam sold separately. See page 199.

Part Number Selection

D Door Thickness Range
1 1.0 (.040) - 1.4 (.055)
2 1.4 (.055) - 1.8 (.070)
3 1.8 (.070) - 2.1 (.085)
4 2.1 (.085) - 2.5 (.100)

M Material
1 UL94-V0 PC/ABS
2 UL94-HB ABS

P2 - 4 D M - R L

R Rotation
1 Type A (Clockwise to lock)
2 Type B (Counter-Clockwise to lock)

L Lock Style
2 With lock core, keyed alike CH751 (with two flat keys supplied)
9 Without lock core (See our handbook page 190-191 or visit www.southco.com)

Dimensions in millimeters (inch) unless otherwise stated

P1 Flush Pull

Low profile · Lift or pull · Single hole mount

- **Easy installation**
- **Deep pocket**

Material and Finish

Pull and cup: ABS plastic, black
Screws: Steel, zinc plated

Performance Details

Maximum static load:
Lifting / pulling: 1300 N (300 lbf)

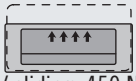

Pushing / sliding: 450 N (100 lbf)

Flammability rating:
UL94-HB or UL94-V0 (See table)

Operating temperature range:
-50°C (-60°F) to 60°C (140°F)

Installation Notes

Mounting screws supplied.
Door thickness less than the minimum for each range allows some movement of the pull.
Maximum torque for mounting screws is 0.5 N•m (5 in•lbf)

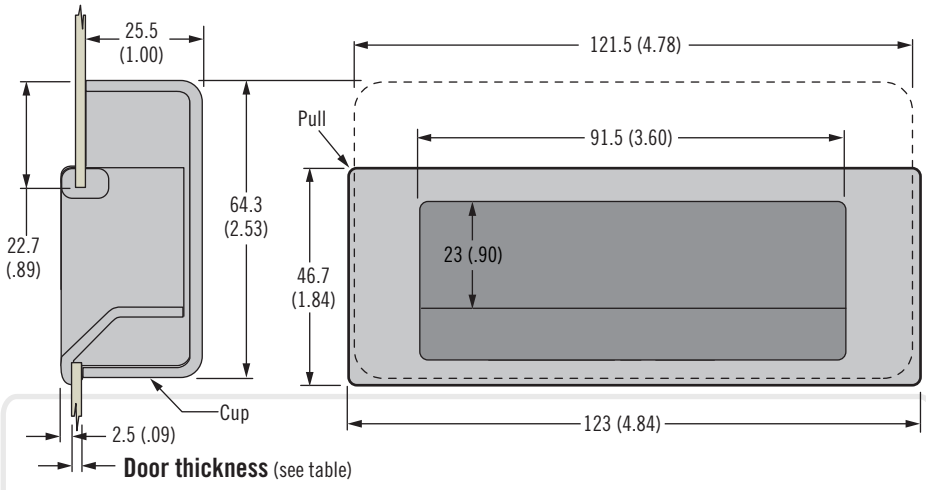

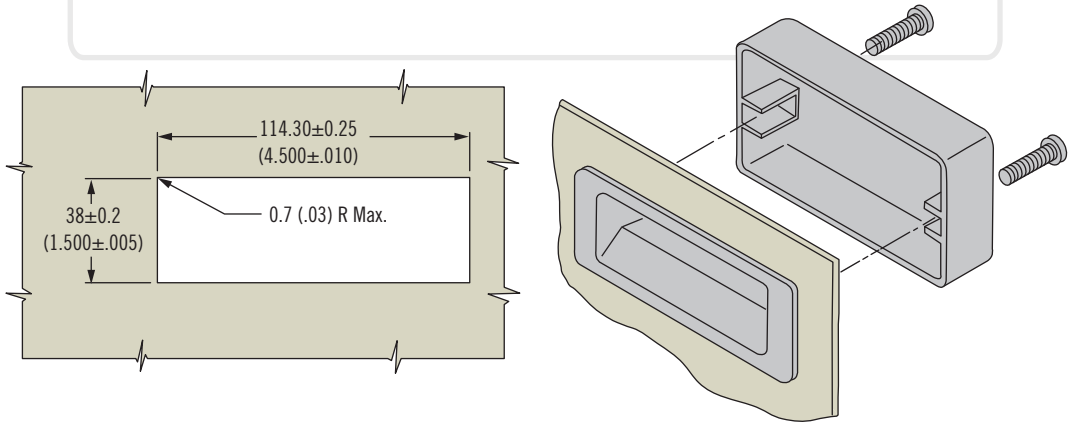

Part Number

See table

Door Thickness Range		Part Number	
Min.	Max.	UL94-HB	UL94-V0
1.0 (.040)	1.8 (.070)	P1-30-101-11	P1-31
1.8 (.070)	3.3 (.130)	P1-30-103-11	P1-33
3.3 (.130)	4.8 (.190)	P1-30-105-11	P1-35
4.8 (.190)	6.3 (.250)	P1-30-107-11	P1-37

Dimensions in millimeters (inch) unless otherwise stated

MP Point Pull

Surface mount

Knob

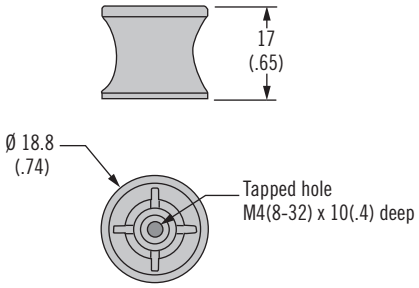

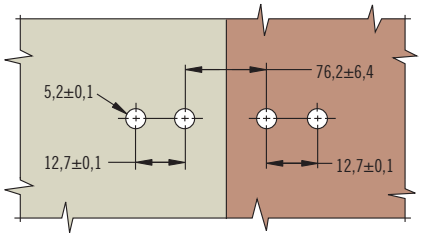

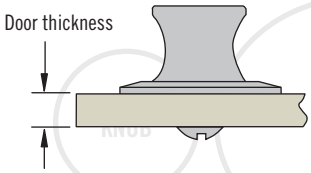

ACTUAL SIZE

KNOB OVAL SQUARE ROUND

Oval flange

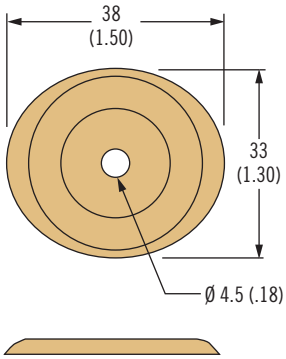

Square flange

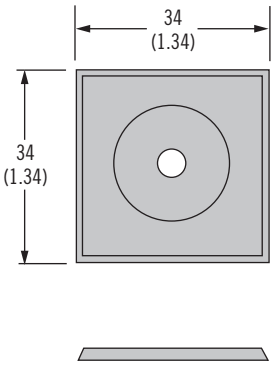

Round flange

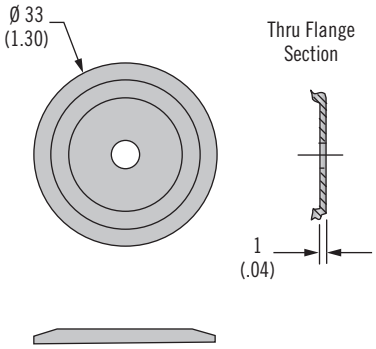

- **Stylish knob design**
- **Finish and flange shape flexibility**

Material and Finish

Zinc alloy, plated or powder coated

Installation Notes

Screws not supplied.
Calculate screw length using the following formula:
Door thickness + 6 (.25)
Maximum tightening torque of mounting screws: 1.7 N•m (15 in•lbf)

Style matches MP push-to-close latch on page 262

Part Number Selection

Choose knob separately

S Style
- **00** Imperial 8 -32 mounting hole
- **40** Metric M4 mounting hole

F Finish
- **10** Chrome, polished
- **20** Chrome, satin
- **30** Nickel, brushed
- **40** Diamond brass
- **50** Powder coated, black

Knob Part Number

MP - 06 - 1 S - F

Part Number Selection

S Style
- **10** Oval flange
- **20** Square flange
- **30** Round flange

F Finish
- **10** Chrome, polished
- **20** Chrome, satin
- **30** Nickel, brushed
- **40** Diamond brass
- **50** Powder coated, black

Flange Part Number

MP - 06 - 1 S - F

67 Concealed Pull

Surface mount

- **Flush mounting**

Material and Finish

10 series: Plastic, black or zinc alloy, black or silver
20 & 40 series:
Handle: Aluminum, silver or black powder coated
Housing and bushing: Plastic, black
Screws: Stainless steel, passivated

Performance Details

Maximum static load:
10 series: 620 N (140 lbf) - plastic
10 series: 1100 N (250 lbf) - metal
20 series: 440 N (100 lbf)
40 series: 580 N (130 lbf)

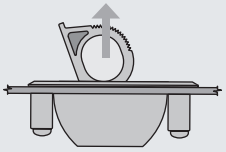

Flammability rating:
Housing & bushing: UL94-HB
Handle (10 Series plastic only): UL94-V2

Installation Notes

Thread forming screw (M4 x 0.7 (10 series metal) M4.2 x 1.4 (all other versions)) supplied for door thickness 6.4 (.25) Maximum.
For thicker doors calculate screw length using the following formula:
Door thickness + 10 (.40)

Notes

Maximum tightening torque of mounting screws:
All versions except 10 series metal: 0.5 N•m (5 in•lbf)
10 series metal version: 2.5 N•m (18 in•lbf)

10 Series - Plastic

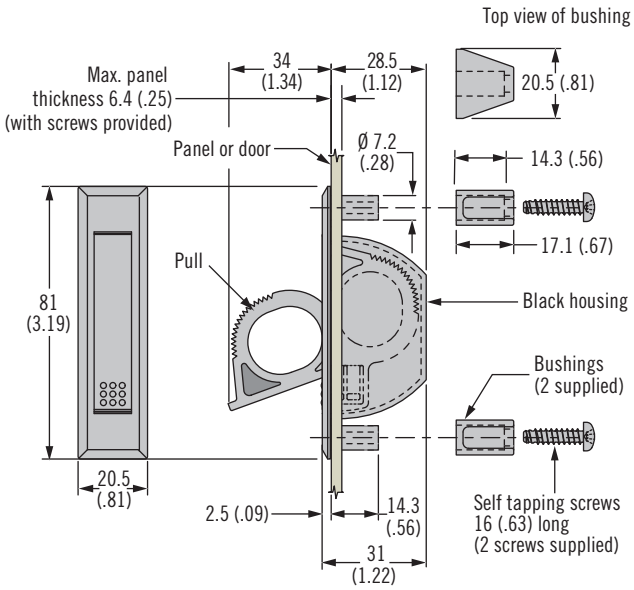

10 Series - Metal with Push Button Handle Release

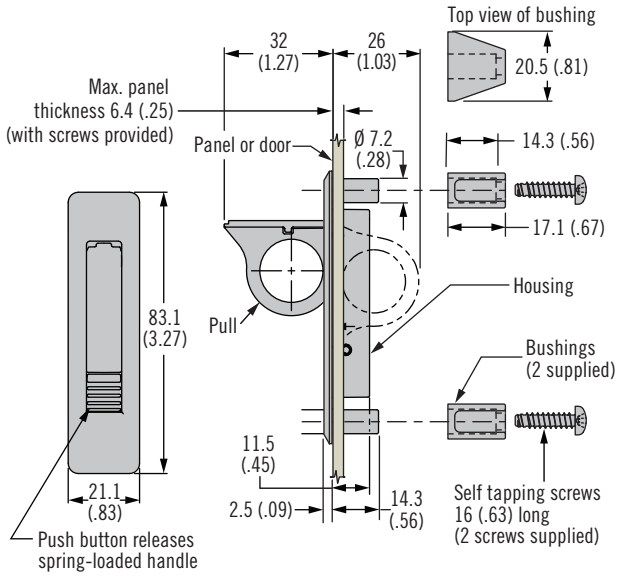

Dimensions in millimeters (inch) unless otherwise stated

20 Series

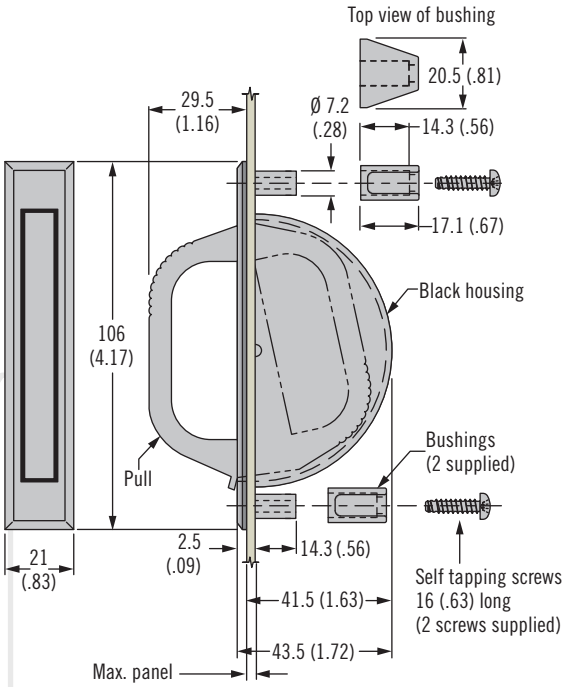

40 Series

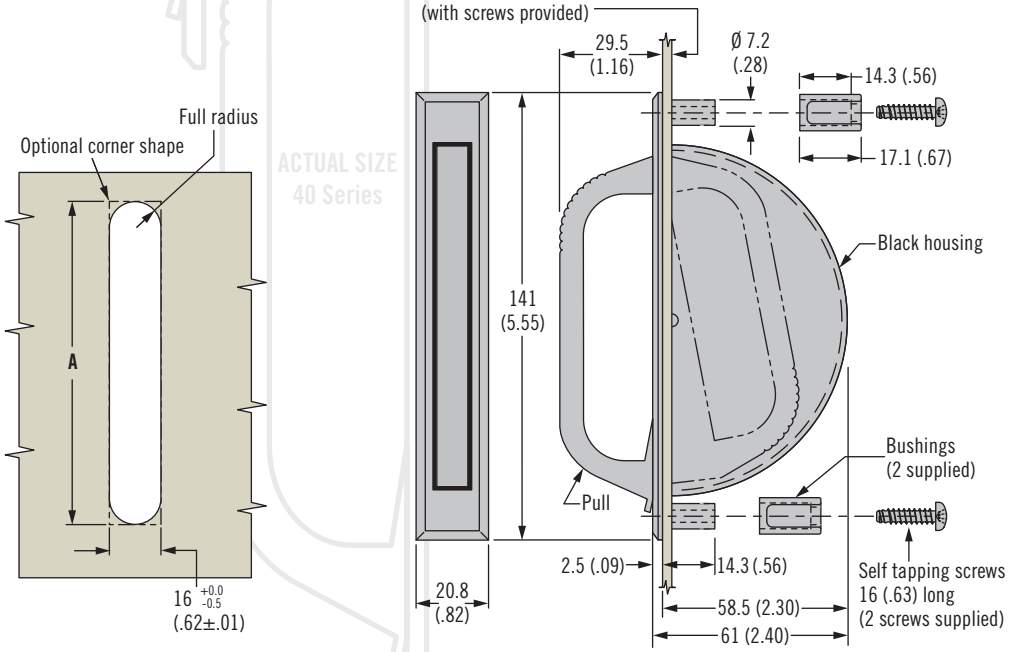

Series	Part Number		Installation
	Silver Handle	Black Handle	A
10-Plastic	~	67-10	$76^{+1.0}_{-.00}$ ($3.00^{+.04}_{-.00}$)
10-Metal	67-14	67-12	$77.5^{+1.0}_{-.00}$ ($3.05^{+.04}_{-.00}$)
20	67-27	67-25	$102^{+1.0}_{-.00}$ ($4.00^{+.04}_{-.00}$)
40	67-47	67-45	$136^{+1.0}_{-.00}$ ($5.35^{+.04}_{-.00}$)

Part Number

See table

B8 Grab Handle

Large · Surface mount

- **Front or rear concealed installation**
- **Ergonomic, comfortable grip**
- **High strength, light-weight solution**

Material and Finish

Handle: ABS plastic, black
Screws: Steel, zinc plated

Performance Details

Maximum static load: 775 N (175 lbf)

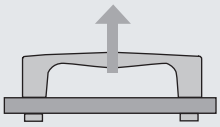

Flammability rating: UL94-HB

Operating temperature range: -40°C (-40°F) to 60°C (140°F)

Installation Notes

Maximum tightening torque of screws:
Rear install concealed only
4.0 N•m (35 in•lbf)

Notes

Bulk packaged

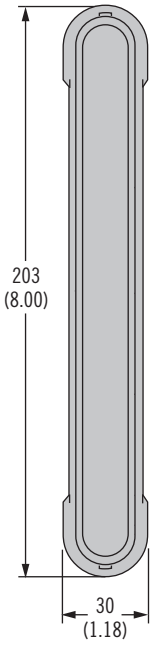

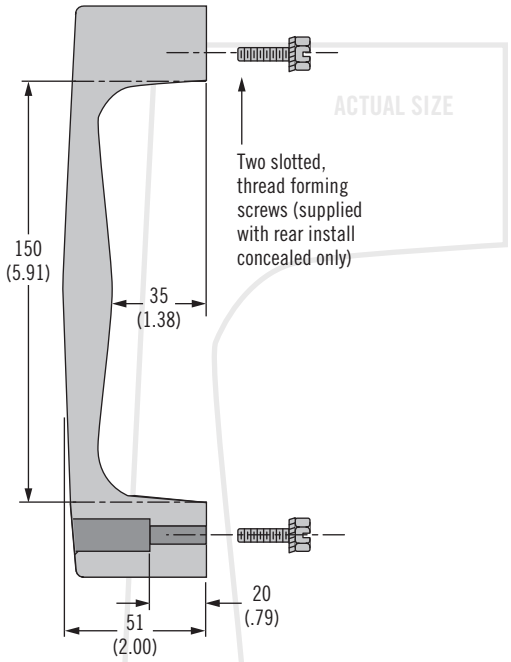

Part Number	
Rear Install Concealed	**Front Install Concealed**
B8-66-3	B8-63-3

Rear Install Concealed

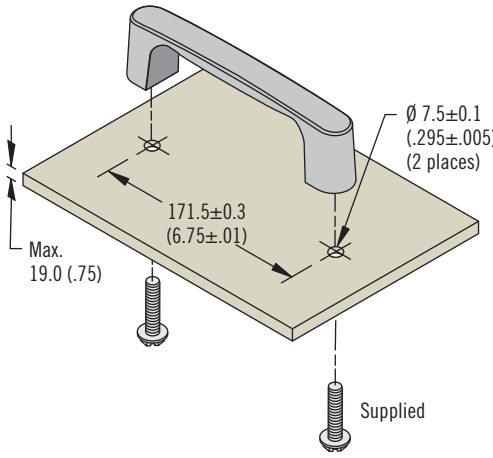

Front Install Concealed

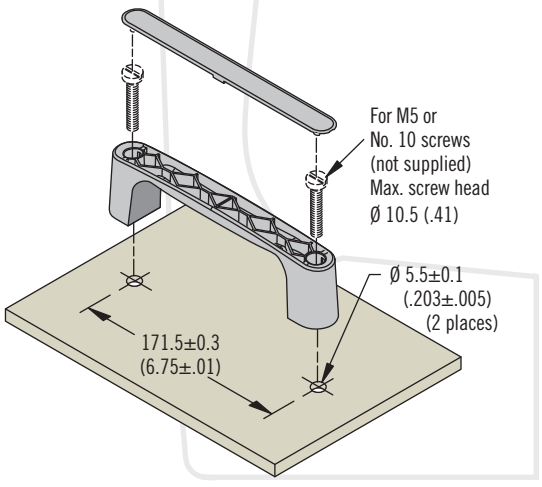

Dimensions in millimeters (inch) unless otherwise stated

B8 Grab Handle

Small · Surface mount

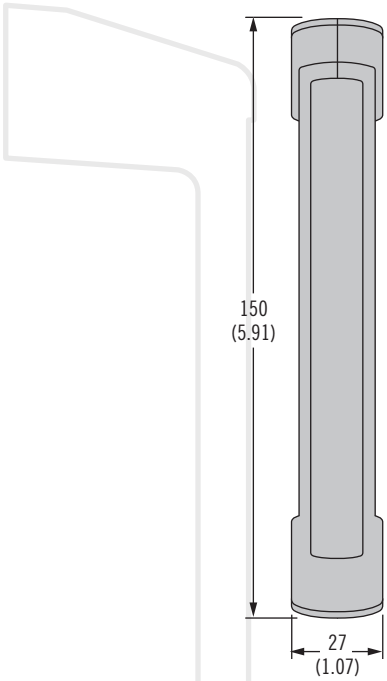

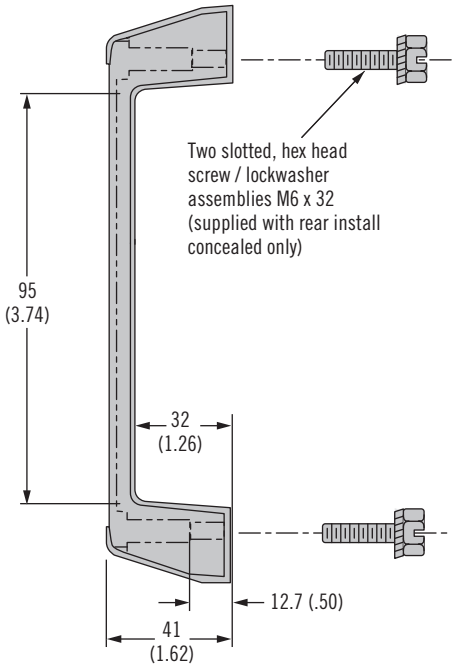

Part Number	
Rear Install Concealed	**Front Install Concealed**
B8-45-3	B8-43-3

- **Front or rear concealed installation**
- **Light-weight**

Material and Finish

Handle: ABS plastic, black
Screws: Steel, zinc plated

Performance Details

Maximum static load: 550 N (125 lbf)

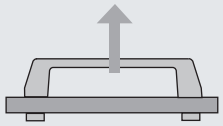

Flammability rating: UL94-HB

Operating temperature range:
-50°C (-60°F) to 60°C (140°F)

Installation Notes

Rear install concealed:
M6 x 32 screw assembly supplied.
Maximum tightening torque of screws: 4.0 N•m (35 in•lbf).
For door thickness greater than 16 (.63) calculate screw length using the following formula:
Door thickness + 16 (.63)

Notes

Bulk packaged

Rear Install Concealed

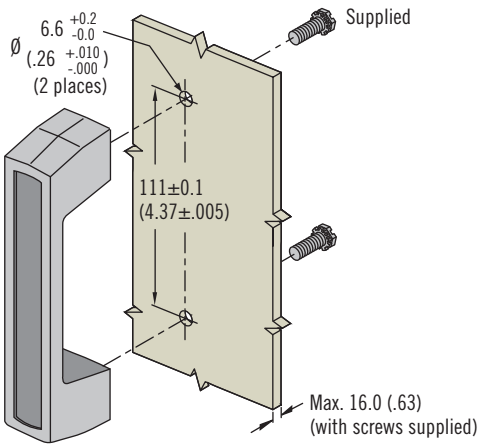

Front Install Concealed

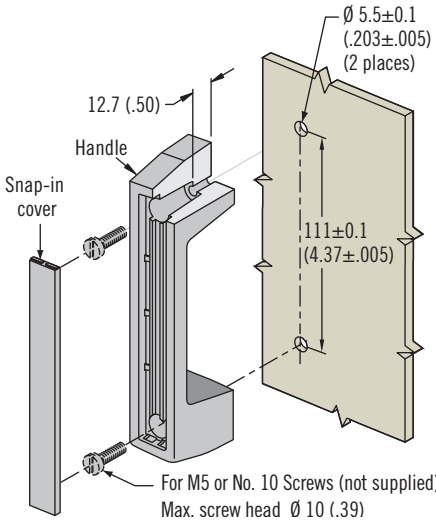

P8 Grab Handle

Surface mount

- **Two styles and colour options available**
- **Concealed installation**
- **Four standard lengths**

Material and Finish

Aluminum, anodized, clear or black
Stainless steel, passivated

Performance Details

Maximum working load: 1500 N (335 lbf)

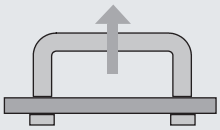

Installation Notes

Screws not supplied.
Calculate screw length using the following formula:
Door thickness + 5 (.20)

Maximum tightening torque of mounting screws: 1.7 N•m (15 in lbf)

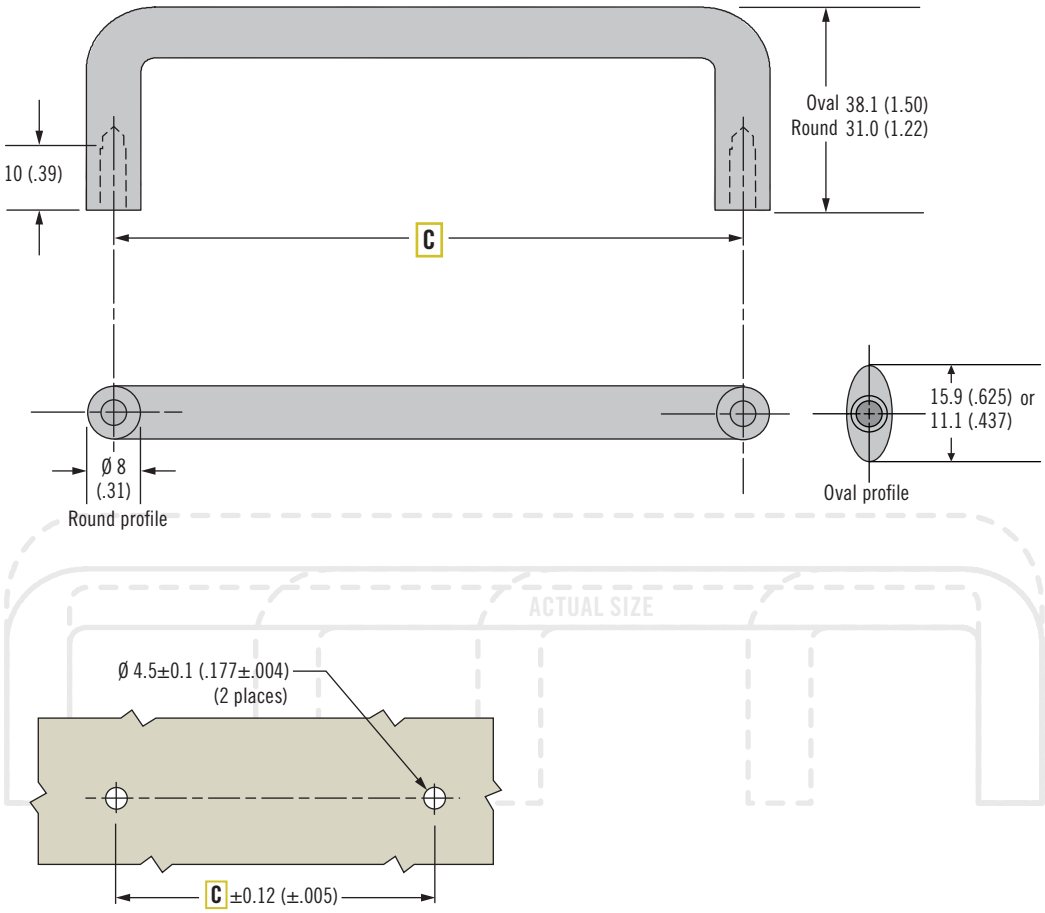

Part Number Selection

For visual identification:
M4 products have a counterbored hole. 8-32 products have a countersink hole

Round Profile

P8 - C - 31 - T - FF - P

C Centers
030 30 (1.18) Hole Centers
064 64 (2.52) Hole Centers
096 96 (3.78) Hole Centers
128 128 (5.04) Hole Centers

T Tapped mounting hole
08 Imperial 8-32
M4 Metric M4 x 0.7

F Material/Finish
11 Aluminum / Clear anodized
15 Aluminum / Black anodized
24 Stainless Steel, Passivated

P Packing option
Omit for individual packaging (1 per bag)
3 Layer packaging contact Southco

Oval Profile

P8 - C - 38 - TD - FF - P

C Centers
064 64 (2.52) Hole Centers
096 96 (3.78) Hole Centers
102 102 (4.02) Hole Centers
128 128 (5.04) Hole Centers

T Tapped mounting hole
10 Imperial 10-32
M4 Metric M4 x 0.7

D Profile
Q 11.1 x 7.1 (.44 x .28) Oval profile
V 15.8 X 7.1 (.62 x .28) Oval profile

F Material/Finish
11 Aluminum / Clear anodized
15 Aluminum / Black anodized

P Packing option
Omit for individual packaging (1 per bag)
3 Layer packaging contact Southco

Dimensions in millimeters (inch) unless otherwise stated

P9 Grab Handle

Folding · Surface mount

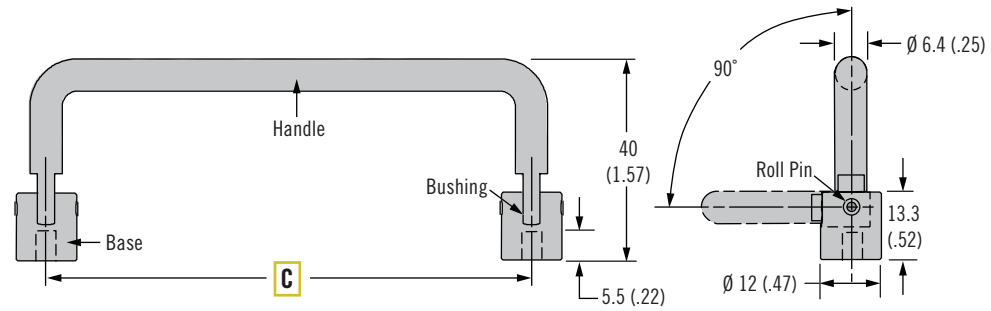

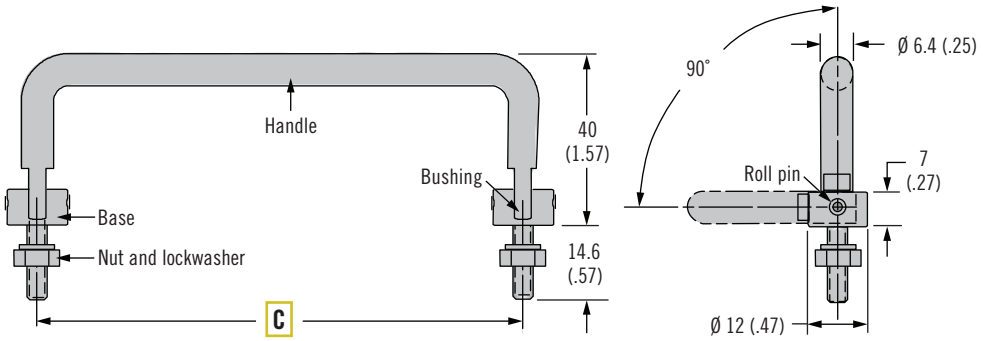

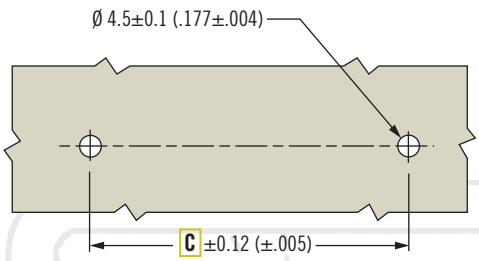

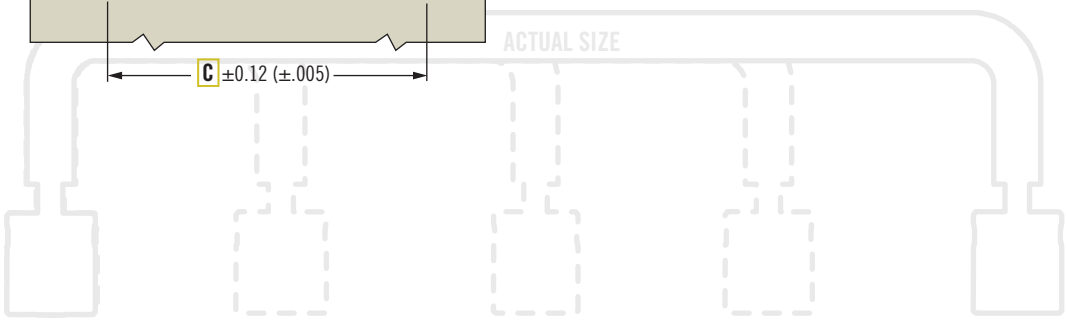

P9 - C - 40 - T B - 1 F - P

C Centers
040 40 (1.57) Hole centers
064 64 (2.52) Hole centers
096 96 (3.78) Hole centers
128 128 (5.04) Hole centers

T Thread
08 Imperial 8-32
M4 Metric M4 x 0.7

B Base type
N Internal thread
X External thread

F Finish
1 Clear anodized
5 Black anodized

P Packing option
Omit for individual packaging (1 per bag)
3 Layer packaging contact Southco

- **Low profile folding style**
- **Concealed installation**
- **Anti-rattle friction feature**

Material and Finish

Handle and base:
Aluminum, anodized, clear or black
Roll pin, mounting nuts and lockwashers:
Stainless steel passivated
Bushing: Nylon

Performance Details

Maximum static load:
Internal threaded version
600 N (135 lbf)
External thread version
400 N (90 lbf)

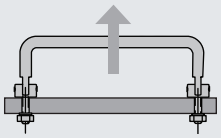

Installation Notes

Internal thread:
Screws not supplied.
Calculate screw length using the following formula:
Door thickness + 5 (.20)

Maximum tightening torque of mounting screws: 1.7 N•m (15 in•lbf)

External thread:
Maximum door thickness 8.4 (.33)
Mounting nuts supplied.
Maximum tightening torque of nuts: 11.5 N•m (10 in•lbf)

Part Number Selection

For visual identification:
M4 products have a counterbored hole.
8-32 products have a countersunk hole

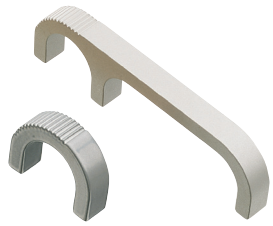

B4 Handle

Surface mount

- **Easy concealed installation**
- **Light-weight**

Material and Finish

Aluminum, anodized, clear or black

Performance Details

Maximum static load:
5560 N (1250 lbf)

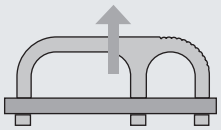

Installation Notes

Screws not supplied.
Calculate screw length using the following formula:
Door thickness + 9.5 (.38)
Center screw may be eliminated if desired (Medium, Large, and Extra Large sizes only)

Maximum recommended tightening torque of mounting screws:
2.3 N•m (20 in•lbf) (not supplied)

Small

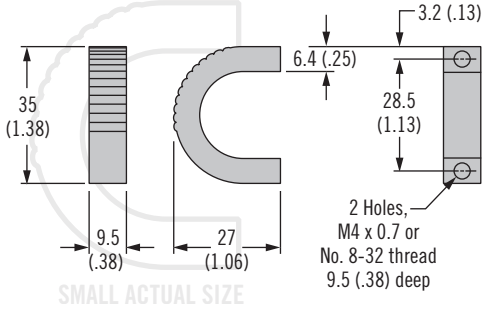

SMALL ACTUAL SIZE

Medium

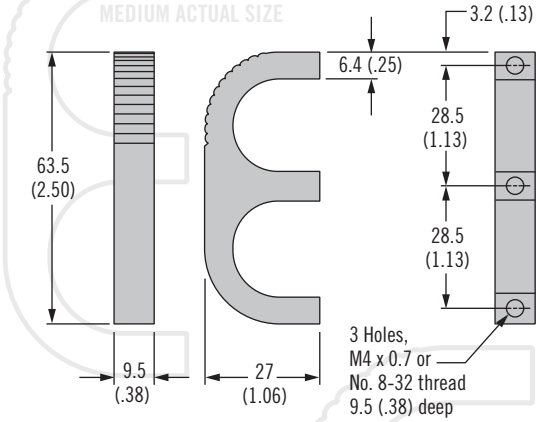

MEDIUM ACTUAL SIZE

Large

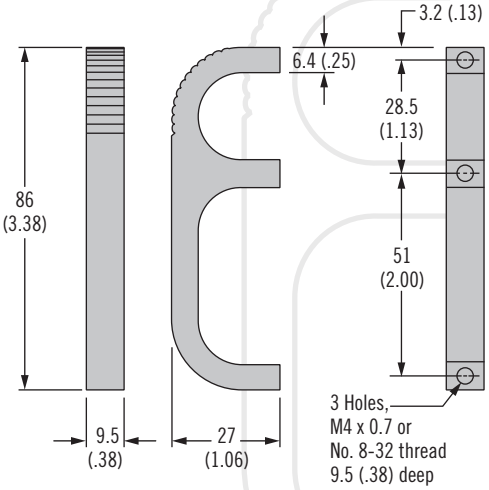

LARGE ACTUAL SIZE

Extra Large

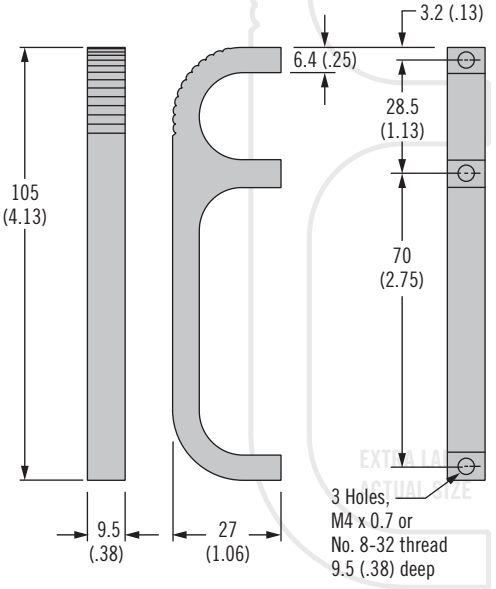

Part Number Selection

B4 - T - S 0 3 - 1 F - P

T Tapped mounting hole
- **10** Imperial 8-32
- **50** Metric M4 x 0.7

S Size
- **1** Small
- **2** Medium
- **3** Large
- **4** Extra large

P Packing option
Omit for individual packaging
- **3** Layer packaged contact Southco

F Finish
- **1** Clear anodized
- **5** Black anodized

Dimensions in millimeters (inch) unless otherwise stated

Entry Door Hardware

Southco offers a broad range of door hardware to suit a wide variety of access door configurations. Aesthetically pleasing, innovative designs allow for an integrated, yet distinctive look and feel for cabin and entry doors. Constructed from marine grade materials, these products offer long-lasting durability and performance.

Contact a Southco sales representative or visit us online at www.southco.com to view our comprehensive range of products.

MA

MA

MM

MG

MF

MR

MA McCoy Swing Door Latch

Privacy Knob

- **Marine-grade materials to prevent corrosion**
- **Double springs keep handle from sagging**
- **Emergency lock override**
- **Privacy lock option**

Material and Finish

Lock engine: Brass
Handles, escutcheons, accents and privacy knob: Brass
See Finish Table

Appearance:

Combine handles, escutcheon plates, and accent plates to customize the latch for your application.
For unique styling combine the McCoy with a wide range of stylish Olivari handles.
See page 609

Handle Types:

Part Number Selection

(For Strikers please see page 614)

D Directional Door Swing:

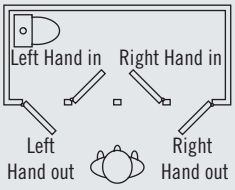

Door Latch

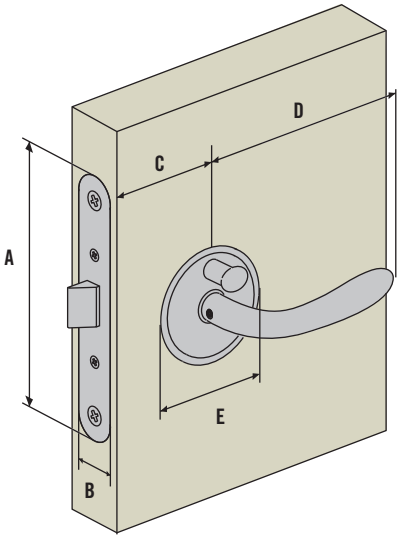

	Imperial		Metric
	Nominal	Decimal	
A	3 29/32	3.91	99
B	41/64	.64	16
C	1 23/32	1.71	43.5
D	3 15/16	3.94	100
E	2 3/16	2.17	55

Panel Preparation

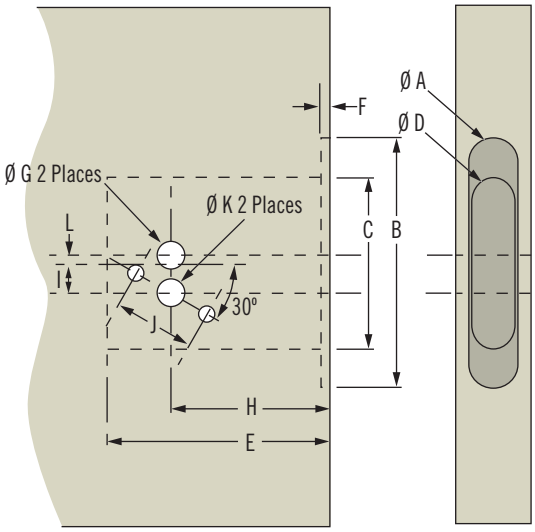

	Imperial		Metric
	Nominal	Decimal	
A	5/8	.64	8.2
B	3 29/32	3.91	99
C	2 31/64	2.48	63
D	1/2	.50	13
E	2 15/32	2.46	62.5
F	5/64	.08	2
G	5/8	.63	16
H	1 25/32	1.77	45
I	1/2	.50	12.5
J	1 3/32	1.09	27.7
K	1/4	.25	6.5

MA - BB - D L T - HH - FF

BB Latch Mechanism
01 Standard Springbolt
08 Double Springbolt

FF Finish
10 Chrome
12 Chrome + Satin Accent
20 Satin
21 Satin + Chrome Accent

HH Handle
01 Nova
02 Portofino

D Directional
2 Right Out
3 Right In
4 Left Out
5 Left In
6 Right Out - Left In
7 Left Out - Right In

T Door Thickness
0 22-30mm (7/8" - 1 3/16")
1 28-37mm (1 1/8" - 1 1/2")

L Locking Option
0 Non Locking **D** = 6 or 7
2 Privacy **D** = 2, 3, 4 or 5

Dimensions in millimeters (inch) unless otherwise stated

MA McCoy Star Swing Door Latch

Key Locking Round Trim

Lock

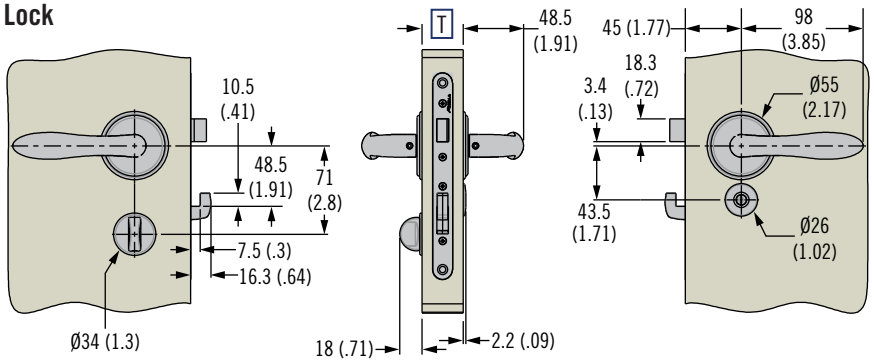

Panel Preparation

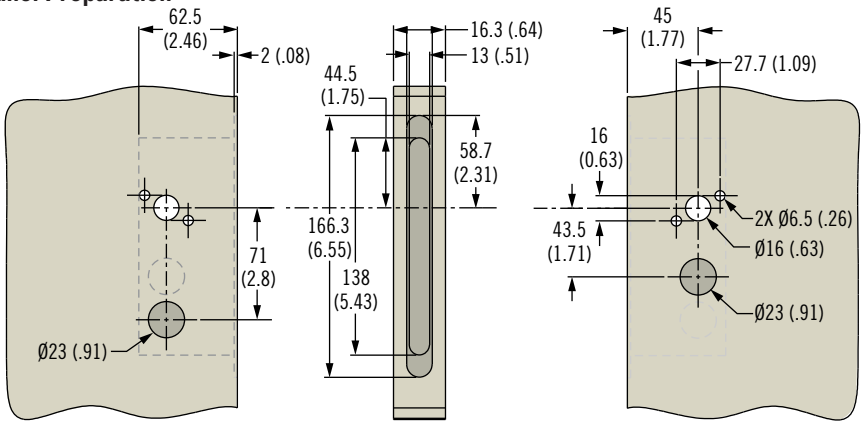

- **Marine-grade materials to prevent corrosion**
- **Provide high-end security with the Star Key Lock system's three-axis six-pin tumbler design**
- **Prevent door lift-off with the Star Key Lock hooked locking mechanism that features an active locking deadbolt facing up**
- **Offer the option of an interior privacy knob with exterior override for non-locking applications**

Material and Finish

Lock engine: Brass
Handles, escutcheons, accents and privacy knob: Brass
See Finish Table

Part Number Selection

(For Strikers please see page 609)

BB **Latch Mechanism**
02 McCoy Star Standard Springbolt
07 McCoy Star Double Springbolt

FF **Finish**
10 Chrome
20 Satin (matte chrome)

MA - BB - D L T - HH - FF 0

D **Directional**
2 Right Out
3 Right In
4 Left Out
5 Left In

L **Locking Option**
3 Star key lock (2 Star Keys included)
5 Privacy knob with emergency egress

T **Door Thickness**
0 22-30mm (7/8" - 1 3/16")
1 28-37mm (1 1/8" - 1 1/2")
2 36.5-45mm (1 7/16 - 1 3/4")

HH **Handle**
01 Nova
02 Portofino

D **Directional Door Swing:**

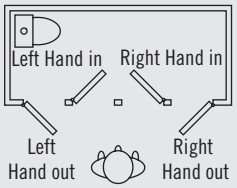

MA McCoy Swing Door Latch

Key Locking Square Trim

- **Marine grade materials to prevent corrosion**
- **Provide high-end security with the Star Key Lock system's three-axis six-pin tumbler design**
- **Prevent door lift-off with the Star Key Lock hooked mechanism, featuring an active locking deadbolt facing up**

Material and Finish

Lock engine: Brass
Handles, escutcheons, accents and privacy knob: Brass
See Finish Table

Door Latch

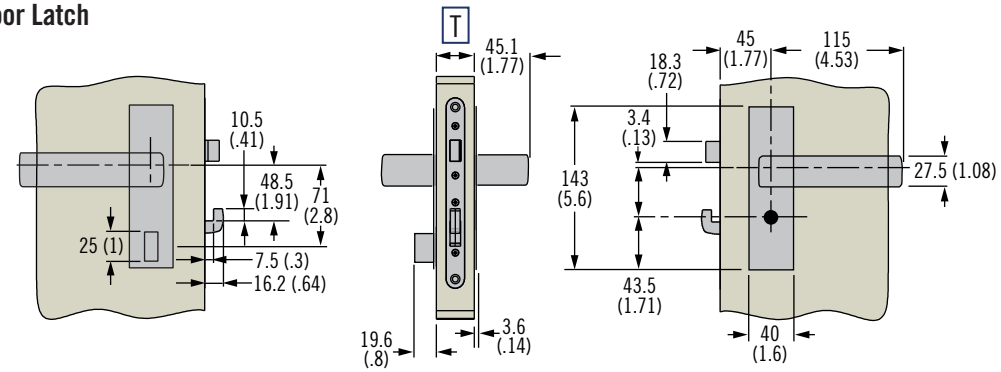

Panel Preparation

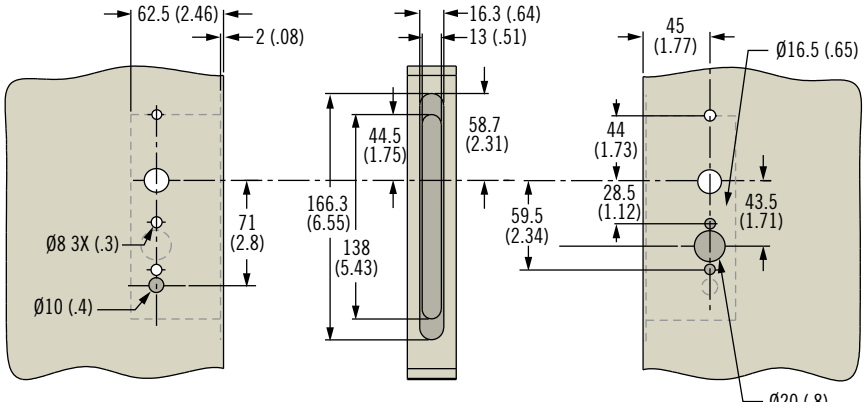

Part Number Selection

(For Strikers please see page 609)

BB Latch Mechanism
02 McCoy Star Standard Springbolt
07 McCoy Star Double Springbolt

FF Finish
10 Chrome

MA - BB - D L T - HH - FF 1

D Directional
2 Right Out
3 Right In
4 Left Out
5 Left In

L Locking Option
0 Non-Locking
3 Star key lock (2 Star Keys included)
5 Privacy knob with emergency egress

T Door Thickness
0 22-30mm (7/8" - 1 3/16")
1 28-37mm (1 1/8" - 1 1/2")
2 36.5-45mm (1 7/16 - 1 3/4")

HH Handle
42 Nordic

D Directional Door Swing:

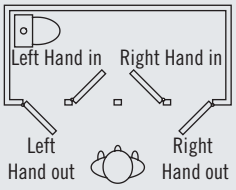

Dimensions in millimeters (inch) unless otherwise stated

MA McCoy Swing Door Latch

Olivari handles

Olivari Handles

Let Southco Marine provide the perfect accent to your interior design. Award winning Olivari handles can be teamed with the world class McCoy lockset to provide the look and feel that set your design apart.

Part Number Selection

Please refer to McCoy Swing Door Latch for Base part number.

MA - BB - D L T - HHH - FF

HHH Handle
Refer to Olivari website and literature for 3-digit handle code for example
Aster = 174
Sector = 186

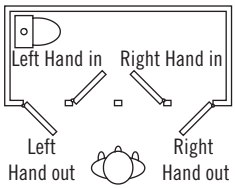

167 Emilia

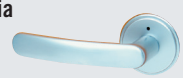

174 Aster

134 Torino

186 Sector

108 Uovo

MA McCoy Swing Door Latch

Striker

Striker

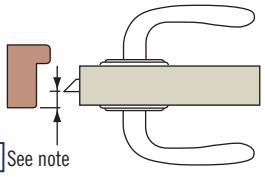

Note:
Distance **XX** is measured from the edge of the frame to the spring bolt

Material and Finish

Striker: Brass, chrome plated

Part Number Selection

MC - 90 - 4 XX - Y - Z - 10

XX Position
- **05** 5mm (3/16")
- **07** 7mm (1/4")
- **09** 9mm (3/8")
- **13** 13mm (1/2")
- **16** 16mm (5/8")
- **21** 21mm (7/8")

Y Swing
- **1** Right In/Left Out
- **2** Left In/Right Out

Z Dustbin Option
- **0** No Dustbin
- **1** With Dustbin

Panel Preparation

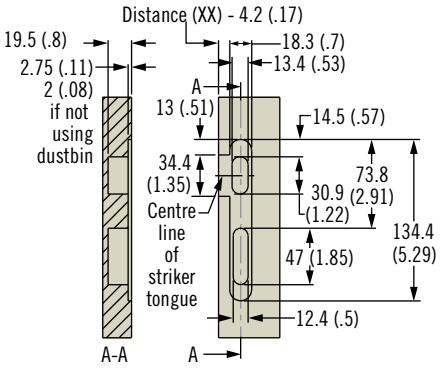

Dimensions in millimeters (inch) unless otherwise stated

ME Offshore Swing Door Latch

Flush, key locking and privacy

- **Offshore is available for both mortise- and flush-mount installations.**
- **All marine-grade materials for corrosion resistance**
- **Offshore flush-mount is designed to fit thinner doors (from 12.7mm / 1/2”)**
- **Interior Privacy Lock with exterior override**

Material and Finish

Lock engine: Aluminum
Handles, escutcheons finish: chrome, aluminum and black
Privacy: Acetal

Flush Privacy Locking

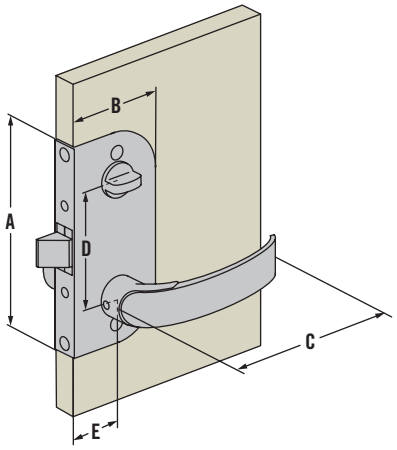

	Imperial		Metric
	Nominal	Decimal	
A	4 37/64	4.59	116.5
B	2 5/32	2.17	55
C	3 15/16	3.94	100
D	2 7/16	2.44	62
E	1 3/16	1.18	30

Panel Preparation

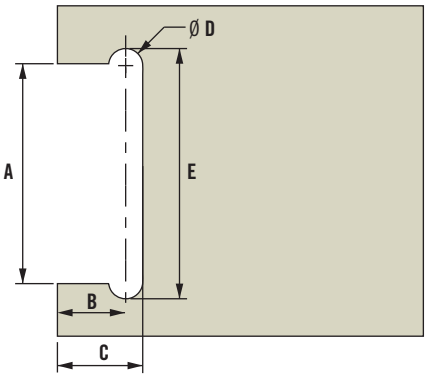

	Imperial		Metric
	Nominal	Decimal	
A	3 21/32	3.65	93
B	1 3/32	1.09	28
C	1 21/32	1.65	42
D	1 3/32	1.09	28
E	4 1/32	4.00	102

Part Number Selection

ME - 01 - D L T - FF

D **Directional**
2 Right Out
3 Right In
4 Left Out
5 Left In

L **Locking Option**
0 Privacy
1 Key Locking

FF **Finish**
10 Chrome
50 Black
60 Aluminum

T **Door Thickness**
0 12.5 - 15mm (1/2” - 5/8”)
1 14.5 - 17mm (9/16” - 11/16”)
2 17 - 19mm (11/16” - 3/4”)
3 19 - 21mm (3/4” - 7/8”)

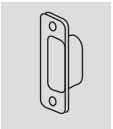

For strikers see page 614

D **Directional Door Swing:**

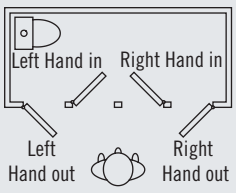

Dimensions in millimeters (inch) unless otherwise stated

ME Offshore Swing Door Latch

Mortise locking

- **All marine-grade materials for corrosion resistance**
- **Mortise mount installation**
- **Interior privacy lock with exterior override**

Material and Finish

Lock engine: Aluminum
Handles, escutcheons finish: chrome, aluminum and black
Privacy: Acetal

Mortise Privacy Locking

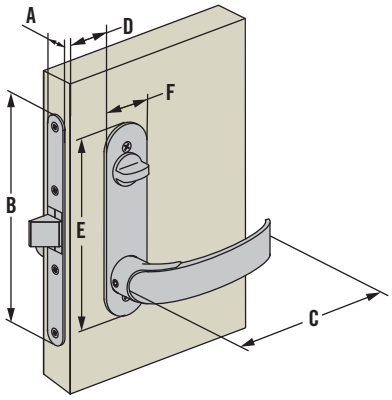

	Imperial		Metric
	Nominal	Decimal	
A	31/64	.492	12.5
B	5 5/16	5.31	135
C	3 15/16	3.94	100
D	39/64	.61	15.5
E	4 37/64	4.59	116
F	1 3/16	1.18	30

Panel Preparation

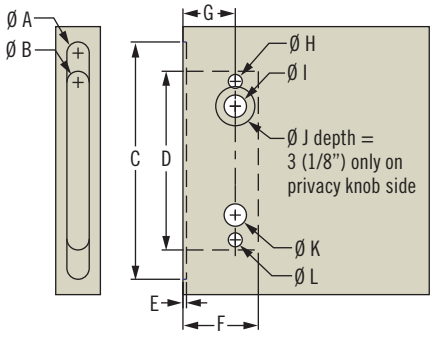

	Imperial		Metric
	Nominal	Decimal	
A	1/2	.50	12.5
B	1/2	.50	12.5
C	5 5/16	5.31	135
D	4	4	102
E	1/16	.06	1.5
F	1 11/16	1.69	43
G	1 11/64	1.17	30
H	5/16	.31	8
I	1/2	.50	12
J	7/8	.88	22
K	1/2	.50	12
L	5/16	.31	8

Part Number Selection

ME - 02 - D L T - FF

D Directional
2 Right Out
3 Right In
4 Left Out
5 Left In

L Locking Option
0 Privacy
1 Key Locking

T Door Thickness
4 18-22mm (11/16" - 7/8")
5 22-27mm (7/8" - 1 1/16")
6 27-32mm (1 1/6" - 1 1/4")
7 32-37mm (1 1/4" - 1 1/2")

FF Finish
10 Chrome
50 Black
60 Aluminum

For strikers see page 614

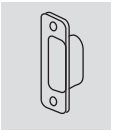

D Directional Door Swing:

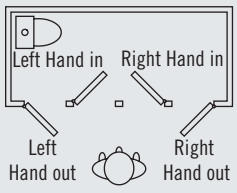

MR Omni Bob Transom Door Latch

- **Easily-adjustable springbolts for left- or right-swing are included for fast conversion**
- **Nylon bumpers reduce vibration and prevent door rattle**
- **Optional doorkeeper holds door in open position**

Material and Finish

Lock engine: Aluminum
Handles, escutcheons finish: Chrome, aluminum and black
Privacy: Acetal

Omni Bob

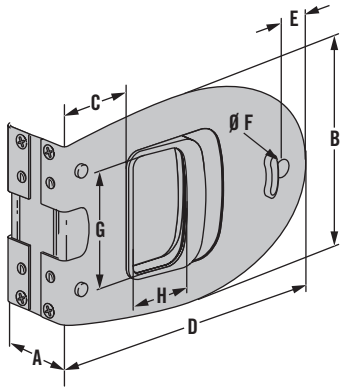

	Imperial		Metric
	Nominal	Decimal	
A	Panel Thickness		
B	3 15/16	3.90	99
C	1 3/8	1.38	35
D	5 5/16	5.32	135
E	15/64	.24	6
F	15/64	.24	6
G	2 5/32	2.17	55
H	1 3/16	1.18	30

Panel Preparations

Omni Bob

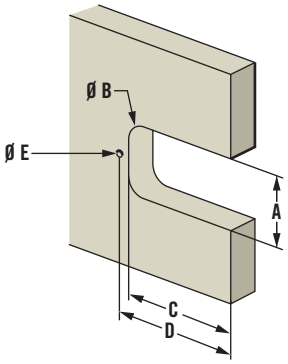

	Imperial		Metric
	Nominal	Decimal	
A	2 11/16	2.67	68
B	5/8	.63	16
C	4 11/16	4.69	119
D	5 3/64	5.04	128
E	15/64	.24	6

Omni Bob Single

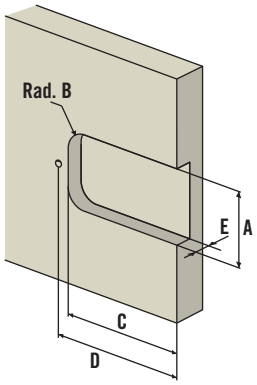

	Imperial		Metric
	Nominal	Decimal	
A	2 11/16	2.67	68
B	5/16	.32	8
C	4 11/16	4.69	119
D	5 3/64	5.04	128
E	25/32	.787	20

Part Number Selection

Omni Bob Part Numbers	
Door thickness range	
25 - 31 mm (1 - 1-1/4")	MR-04-106-24
30 - 36 mm (1-3/16 - 1-7/16")	MR-04-107-24
35 - 41 mm (1-3/8 - 1-5/8")	MR-04-108-24
40 - 46 mm (1-9/16 - 1-13/16")	MR-04-109-24
45 - 51 mm (1-3/4 - 2")	MR-04-1010-24

Omni Bob Single Part Numbers		
Door thickness range	Door Swing	
25 mm (1")	right out/left in	MR-05-603-24
25 mm (1")	left out/right in	MR-05-703-24

Dimensions in millimeters (inch) unless otherwise stated

MR Omni Cabin & Cockpit Door Lock

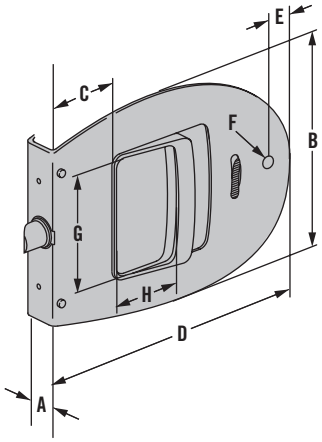

	Imperial		Metric
	Nominal	Decimal	
A	Panel Thickness		
B	6 7/16	6.42	163
C	1 9/64	1.14	29
D	4 9/16	4.57	116
E	3/8	.37	9.5
F	15/64	.24	6
G	1 13/16	1.81	46
H	1 1/32	1.02	26

Panel Preparation

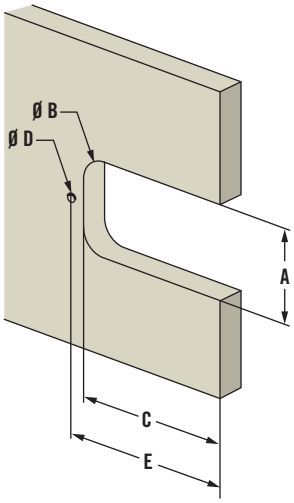

How to override a locked Omni door lock from the outside

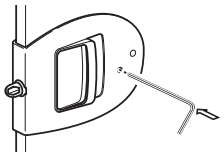

		Imperial		Metric
		Nominal	Decimal	
A	min.	2 3/16	2.19	55.6
	max.	2 1/4	2.27	57.9
B	min.	1/4	.25	6.4
	max.	9/16	.56	14
C	min.	3 13/16	3.813	96.8
	max.	3 7/8	3.875	98.4
D	-	1/4	.25	6.4
E	-	4 3/16	4.19	106.3

- **All marine-grade materials for corrosion resistance**
- **Flush outer surface**
- **Privacy button option**
- **Optional doorkeeper holds door in open position**

Material and Finish

Handle, housing: Acetal, black
Escutcheon: Stainless steel, polished

Omni 2-Step

Omni Flat

Omni Spring Bolt

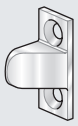

Omni Flat Striker

Omni Part Numbers						
	Spring bolt		Flat		2 step	
Door thickness (A)	Privacy	No privacy	Privacy	No privacy	Privacy	No privacy
12.7 mm (1/2)	MR-01-120-24	MR-01-100-24	MR-02-120-24	MR-02-100-24	MR-03-120-24	MR-03-100-24
16 mm (5/8)	MR-01-121-24	MR-01-101-24	MR-02-121-24	MR-02-101-24	MR-03-121-24	MR-03-101-24
19 mm (3/4)	MR-01-122-24	MR-01-102-24	MR-02-122-24	MR-02-102-24	MR-03-122-24	MR-03-102-24
Features						
Privacy	X	-	X	-	X	-
Adjust Spring Bolt	X	X	-	-	X	X
Bumpers (both sides)	X	X	X	X	X	X
Left and Right swing	X	X	X	X	X	X

Doorkeepers

Type 1

12 (1/2")

Type 2

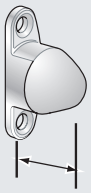

18 (11/16")

Options

Striker Part Number	
Omni Flat	MR-90-100-10

Doorkeeper Part Numbers		
Type	White	Black
1	MR-91-101-70	MR-91-101-50
2	MR-91-102-70	MR-91-102-50

MC Striker

- Available in seven different sizes
- Suitable for Offshore, McCoy, Compact, and Omni swing door latches and many door and frame configurations and door thicknesses
- Striker tongue prevents wear from boat vibration
- Optional dustbin hides sawdust in the cut out hole and provides an elegant finish to the frame edge

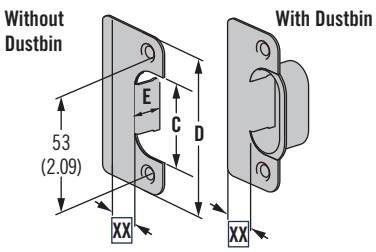

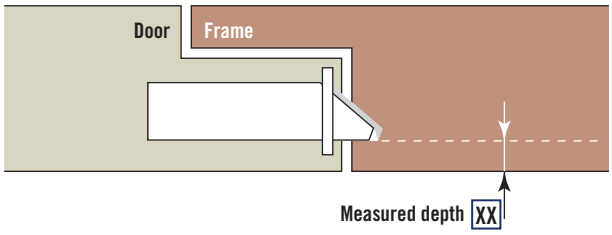

To find the right striker for your application, measure the distance from the door face to the edge of the springbolt of the latch.

C		D		E	
Metric	Imperial	Metric	Imperial	Metric	Imperial
36	1 7/16	68	2 11/16	13	1/2

Part Number Selection

MC - 90 - Z XX - FF

FF Finish
- **10** Brass, nickel plated
- **24** Stainless steel

Z Dustbin Option
- **1** No Dustbin
- **2** With Dustbin

XX Position
- **03** 3mm (7/64")
- **05** 5mm (3/16")
- **07** 7mm (1/4")
- **09** 9mm (3/8")
- **13** 13mm (1/2")
- **16** 16mm (5/8")
- **21** 21mm (7/8")

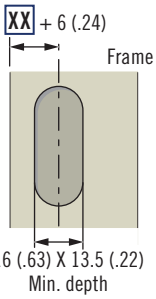

www.southco.com/MC

MC Whale Striker

- Suitable for Offshore, McCoy and Compact swing door latches.
- Quick and easy installation

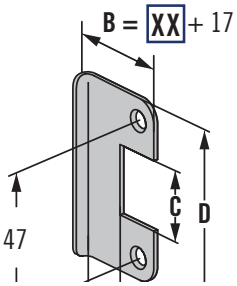

C		D	
Metric	Imperial	Metric	Imperial
60	2 3/8	22	7/8

Part Number Selection

MC - 90 - 3 - XX - FF

XX Position
- **03** 3mm (7/64")
- **05** 5mm (3/16")
- **07** 7mm (1/4")
- **09** 9mm (3/8")
- **13** 13mm (1/2")
- **16** 16mm (5/8")
- **21** 21mm (7/8")

FF Finish
- **10** Brass, nickel plated

Dimensions in millimeters (inch) unless otherwise stated

southco®

MM Talon Sliding Entry Door Latch

Flush style, star and standard

Panel Preparation

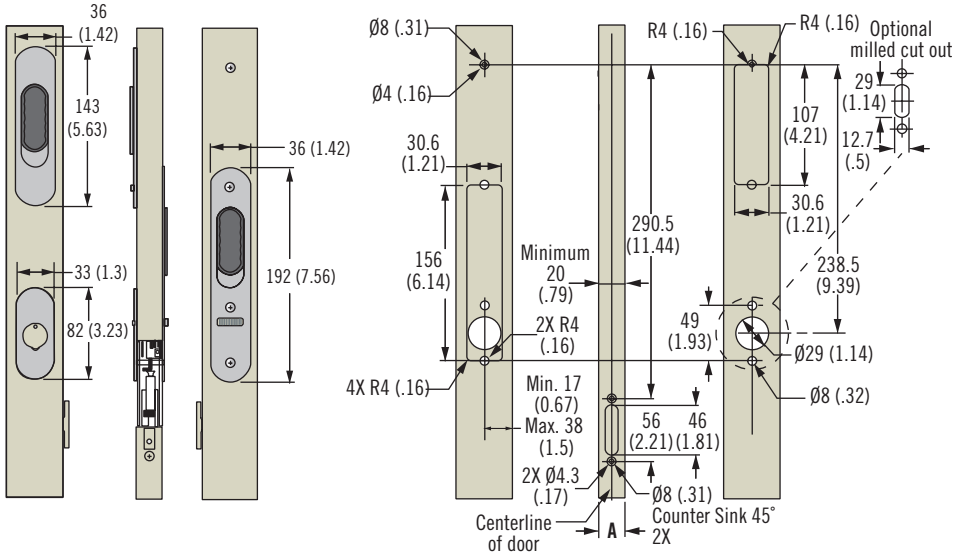

Star Part Numbers					
Finish	Style	Door Thickness (A)			
		20.5 (0.81) - 23 (0.91)	23 (0.91) - 28.5 (1.12)	28.5 (1.12) - 33.5 (1.32)	33.5 (1.32) - 38 (1.50)
Chrome	Standard	MM-01-130-10	MM-01-131-10	MM-01-132-10	MM-01-133-10
	Standard Top Stop feature	MM-01-430-10	MM-01-431-10	MM-01-432-10	MM-01-433-10
Black Powder Coated	Standard	MM-01-130-50	MM-01-131-50	MM-01-132-50	MM-01-133-50
	Standard Top Stop feature	MM-01-430-50	MM-01-431-50	MM-01-432-50	MM-01-433-50

Talon Part Numbers				
Without Key locking* (egress opening from outside)	Door Thickness Range			
	20.5 (.81) - 23 (.91)	22.5 (.87) - 27 (1.06)	27 (1.06) - 34.5 (1.38)	28.5 (1.13) - 38 (1.5)
Anodized aluminum	MM-01-100-60	MM-01-101-60	MM-01-102-60	MM-01-103-60
Powder coated black aluminum	MM-01-100-50	MM-01-101-50	MM-01-102-50	MM-01-103-50
Chrome	MM-01-100-10	MM-01-101-10	MM-01-102-10	MM-01-103-10
Key locking				
Anodized aluminum	MM-01-110-60	MM-01-111-60	MM-01-112-60	MM-01-113-60
Powder coated black aluminum	MM-01-110-50	MM-01-111-50	MM-01-112-50	MM-01-113-50
Chrome	MM-01-110-10	MM-01-111-10	MM-01-112-10	MM-01-113-10

Talon Accessories	
Mounting tool for striker	MM-90-103-41
Top Stop	MM-7520
High-seas handles for chrome Talon	MM-7660
High-seas handles for black Talon	MM-7683

For top stop installation please refer to website.

For high seas handle installation please refer to website.

- **New superior Star Key Lock capability provides enhanced, three-axis pin tumbler security**
- **Top-stop latching feature provides option to secure door in the full open, full closed, or partially open positions, prevents accidental closing even in rough seas**
- **Attractive flush face design provides sleek look that complements a wide range of boats**
- **Optional high-seas handle provides sturdy grip for both latch and door operation**
- **Designed for doors in stainless steel and aluminum extrusions**

Material and Finish

Escutcheons, outside plate: Aluminum, chrome plated or black powder coat

MM Star Slider Entry Door Latch

Flush inside style

- **Superior Star Key Lock™ capability provides enhanced three-axis pin tumbler security**
- **A one-piece pivot actuation latch with integrated lock mechanism provides reliable performance and a smooth, ergonomic feel in use**
- **Flush version with pivot handle on the outside and flush handle on the inside**
- **Top-stop latching feature provides option to secure door in the full open, full closed, or partially open positions, prevents accidental closing even in rough seas**
- **Designed for doors in stainless steel and aluminum extrusions**

Material and Finish

Escutcheons, outside plate:
Aluminum, chrome plated

Panel Preparation

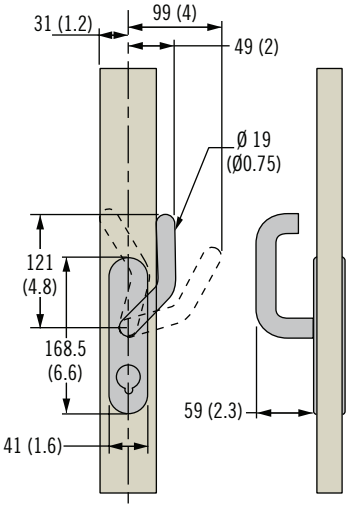

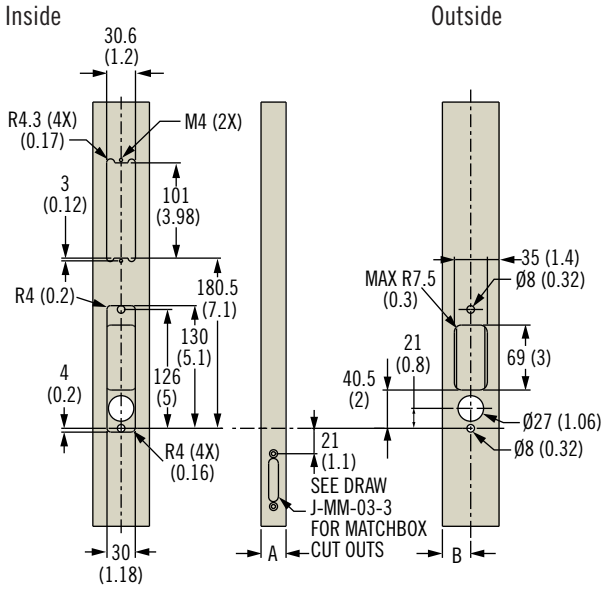

Latch Module Options

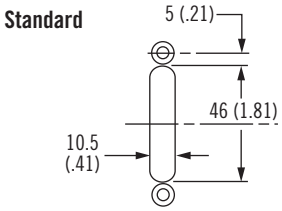

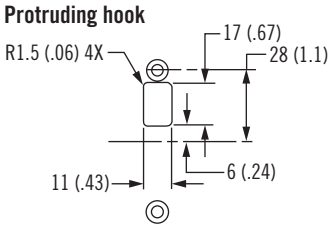

Slider Part Numbers - Flush inside version			
Latch Module Locking Mechanism	**Door Thickness (A)**		
	23 (.9) - 28.5 (1.12)	28.5 (1.12) - 33.5 (1.32)	33.5 (1.32) - 38 (1.50)
Standard. Star Slider chrome. Offset handle and flushed inside handle.	MM-03-131-**XX**-10	MM-03-132-**XX**-10	MM-03-133-**XX**-10
Star Slider chrome. Offset handle and flushed inside handle. Protruding hook.	MM-03-331-**XX**-10	MM-03-332-**XX**-10	MM-03-333-**XX**-10

XX = 15 for port closing door
XX = 16 for starboard closing door

Star Slider Accessories	
Mounting tool for striker	MM-90-103-41
Top Stop	MM-7520

Dimensions in millimeters (inch) unless otherwise stated

MM Star Slider Entry Door Latch

Handle style

Panel Preparation

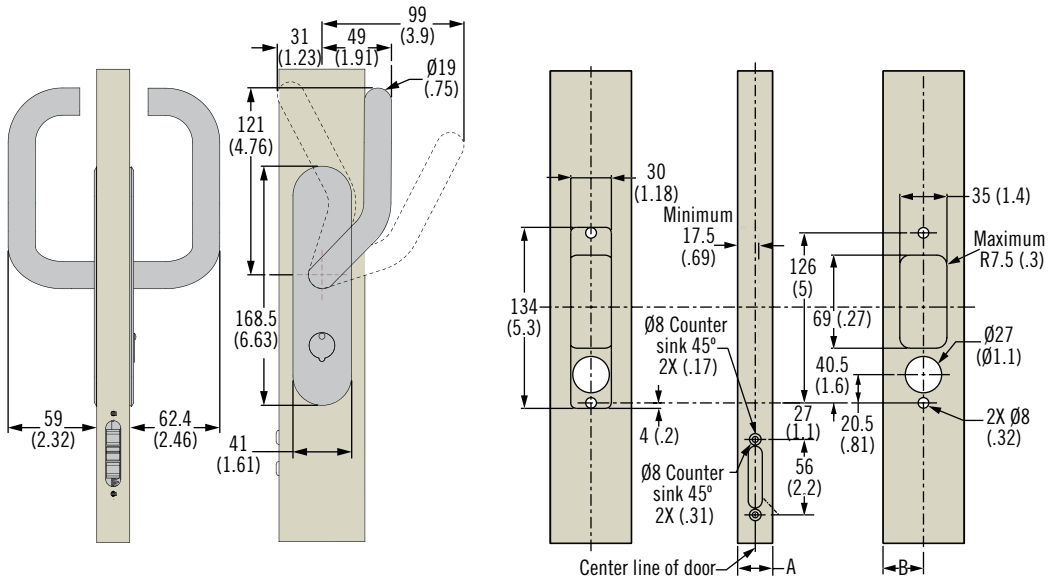

Latch Module Options

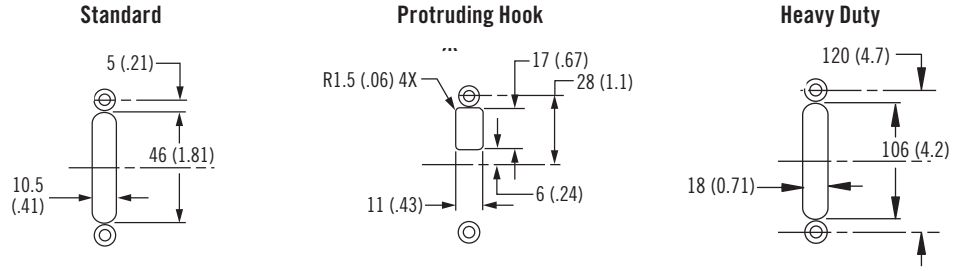

Star Slider Part Numbers			
Latch Module	**Door thickness (A)**		
	23 (0.93) - 28.5 (1.12)	**28.5 (1.12) - 33.5 (1.32)**	**33.5 (1.32) - 38 (1.50)**
Standard	MM-03-131-14-10	MM-03-132-14-10	MM-03-133-14-10
Protruding hook	MM-03-331-14-10	MM-03-332-14-10	MM-03-333-14-10
Standard top stop feature	MM-03-431-14-10	MM-03-432-14-10	MM-03-433-14-10
Heavy Duty	MM-03-531-14-10	MM-03-532-14-10	MM-03-533-14-10
Protruding hook, top stop feature	MM-03-631-14-10	MM-03-632-14-10	MM-03-633-14-10

Star Slider Accessories	
Mounting tool for striker	MM-90-103-41
Top Stop	MM-7520

- **Superior Star Key Lock™ capability provides enhanced three-axis pin tumbler security**
- **A one-piece pivot actuation latch with integrated lock mechanism provides reliable performance and a smooth, ergonomic feel in use**
- **Pivot handle on both sides**
- **Top-stop latching feature provides option to secure door in the full open, full closed, or partially open positions, prevents accidental closing even in rough seas**
- **Designed for doors in stainless steel and aluminum extrusions**

Material and Finish

Escutcheon: Aluminum,
Privacy Knob: Brass, chrome plated

MF Flush Entry Door Lock

- **Allows for 100 - 150mm (4”- 6”) more door travel than traditional sliding-door lock styles**
- **Safety lock prevents the door from being locked from the inside. To activate: turn key clockwise and remove**
- **Shipped with striker and two keys**
- **Locks can be matched to other *SOUTHCO*® deck latches. Contact Southco for more information**

Material and Finish:

Stainless Steel, Aluminum anodized, Black anodized or White powdercoat.
Shape: Oval or rectangular design.

Available Options:

Sealing: Weatherproof and watertight seals.

Flush Oval

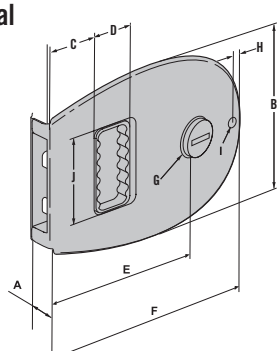

	Imperial		Metric
	Nominal	Decimal	
A	1/2	.50	12.7
B	3 7/8	3.88	98.5
C	49/64	.77	19.5
D	49/64	.77	19.6
E	3 3/4	3.74	95
F	5 53/64	5.83	148
G	53/64	.83	21
H	33/64	.51	13
I	13/64	.2	5
J	1 3/4	1.75	44.5

Flush

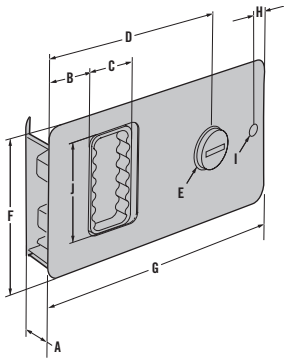

	Imperial		Metric
	Nominal	Decimal	
A	1/2	.50	12.7
B	1 1/8	1.12	28.5
C	25/32	.77	20
D	3 49/64	3.76	95.5
E	53/64	.83	21
F	2 7/8	2.88	73
G	5 9/32	5.28	134
H	21/64	.34	8.5
I	15/64	.24	6
J	1 3/4	1.75	44.5

Panel Preparation

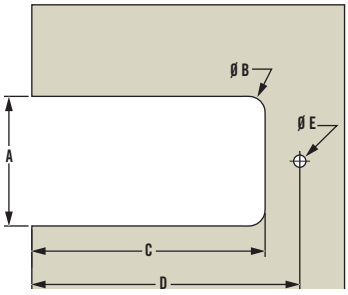

Flush Square

	Imperial		Metric
	Nominal	Decimal	
A	2 1/2	2.5	63.5
B	5/8	.63	16
C	4 1/2	4.5	114
D	4 61/64	4.95	125.7
E	1/4	.25	6.4

Flush Oval

	Imperial		Metric
	Nominal	Decimal	
A	2 1/2	2.5	63.5
B	5/8	.63	16
C	4 1/2	4.5	114
D	5 5/16	5.31	135
E	1/4	.25	6.35

Flush Part Numbers					
Style	Aluminum	Stainless steel	Black	White	Oval
Standard	MF-01-110-60	MF-01-110-24	MF-01-110-50	MF-01-110-70	MF-01-310-24
Weather Proof	MF-02-110-60	MF-02-110-24	MF-02-110-50	MF-02-110-70	MF-02-310-24
Watertight	MF-03-110-60	MF-03-110-24	MF-03-110-50	MF-03-110-70	MF-03-310-24

Dimensions in millimeters (inch) unless otherwise stated

MF ProFlush Entry Door Lock

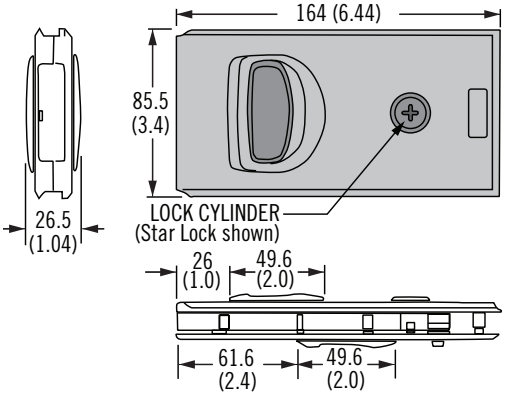

- **Marine grade materials to prevent corrosion**
- **Sealed to help prevent water intrusion**
- **Available with two types of lock plugs**
  - **Star lock system, provides high security with a pin tumbler lock plug**
  - **3 wafer flat key (MIM) lock, provides security with a stainless steel plug and has a reversible key**

Material and Finish

Escutcheon: Stainless steel, highly polished
Handles: Polycarbonate/polyester, black
Privacy knob: Nylon, black

Panel Preparation

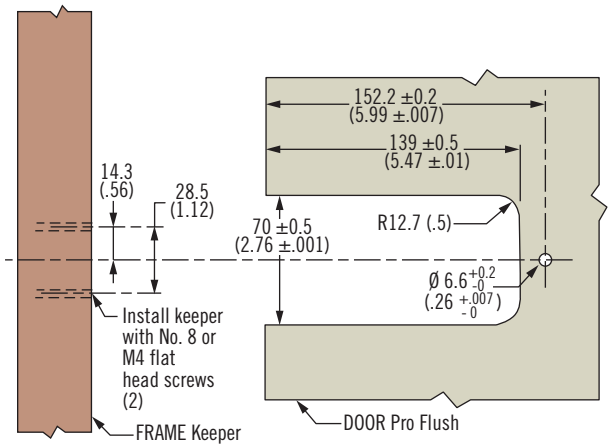

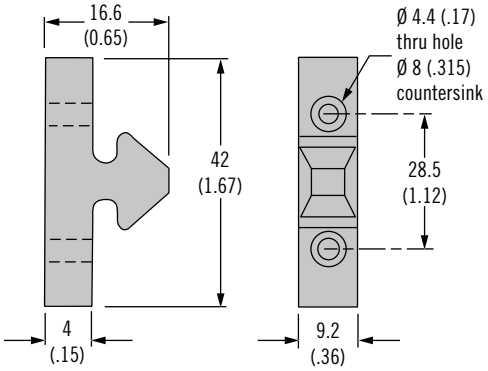

Pro Flush Latch*	Part Number
Star Lock	MF-05-530-24
Disc Tumbler Lock	MF-05-550-24

Accessories	Part Number
Spacer	MF-92-500-24
Mounting Tool	MF-90-400-10

* Two grip friendly overmolded keys and a keeper supplied.

For spare keys please contact Southco

MG Secure Entry Door Lock

- **Offered in all corrosion-resistant materials, including Polyamide, Stainless Steel, and Brass**
- **Outside keylocking with interior sliding privacy lock**
- **Supplied with striker and two keys**

Material and Finish:

Finish: White or black polyamide case

Accessories:

Locking: Optional black day key available.

Spacer: Optional spacer available to accept a 10mm (3/8") door thickness.

Striker: Numerous strikers available in clear or black anodized aluminum or stainless steel.

For spare keys please contact Southco

Notes

For additional striker options and accessories please see page 621

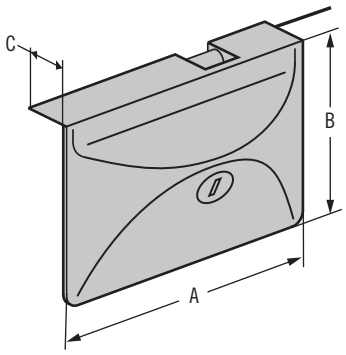

	Imperial		Metric
	Nominal	Decimal	
A	3 27/64	3.43	87
B	2 11/64	2.17	55
C	15/32	.47	12

Panel Preparations

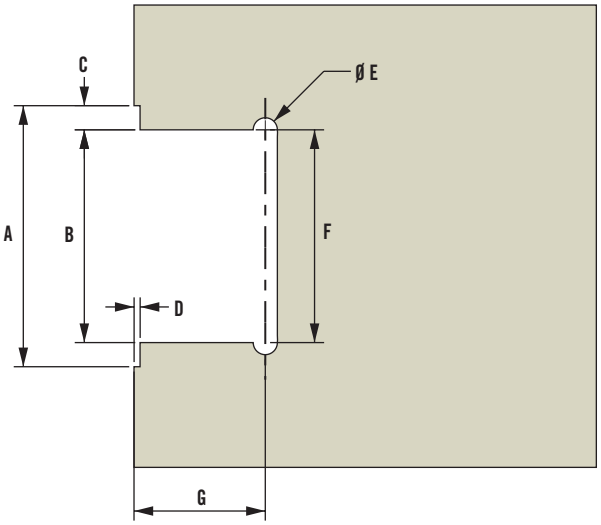

	Imperial		Metric
	Nominal	Decimal	
A	3 13/32	3.41	86.5
B	2 25/32	2.78	70.5
C	15/16	.32	8
D	5/64	.08	2
E	5/16	.31	8
F	2 27/32	2.84	72
G	1 23/32	1.71	43.5

How to determine your key combination

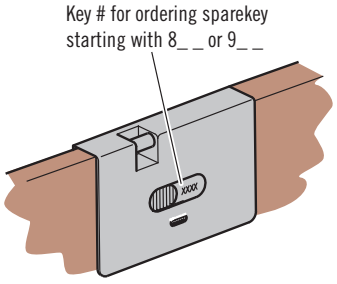

Secure Part Numbers		
	Black	White
With P-striker and two keys	MG-01-110-50	MG-01-110-70

Dimensions in millimeters (inch) unless otherwise stated

MG Star Sailor Entry Door Lock

Assembly

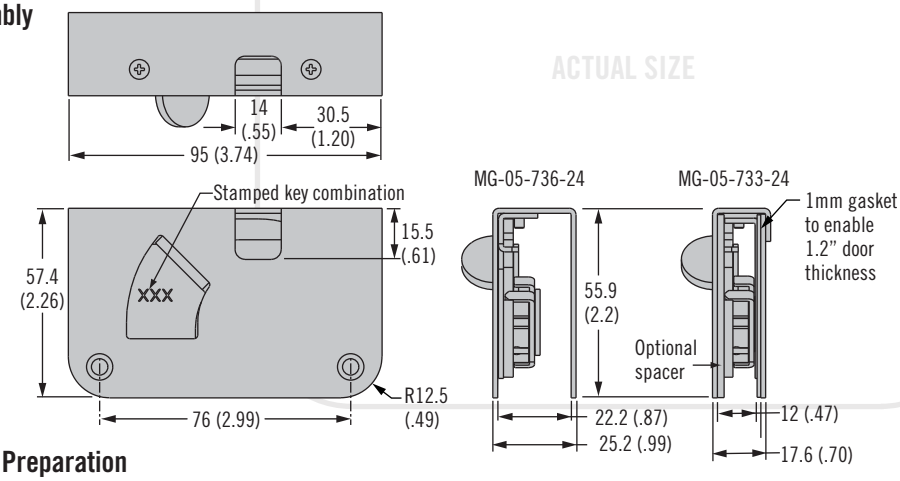

Panel Preparation

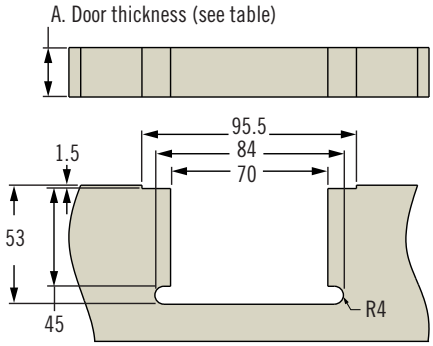

Optional Spacer (2mm)

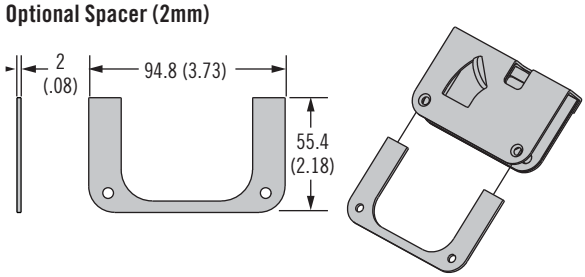

- **Suitable for 12mm and 22mm entry door thicknesses**
- **Provide high-end security with the Star Key Lock system´s three-axis six-pin tumbler design**

Material and Finish

Lock Case: Stainless Steel
Star Plug: Brass
Spring: 316 Stainless Steel
Screws: 316 Stainless Steel

Part Number: MG-05-115
Use with MG-05-733-24 to enable 10mm Door thickness
Use with MG-05-736-24 to enable 20mm Door thickness

Strikers - Accessories

Day key, black (for secure only)	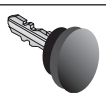	MF-96-XXX-41
Striker, anodized aluminum	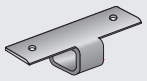	MG-90-102-60
Striker, anodized black	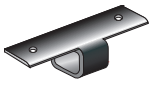	MG-90-102-50
Eyelet striker, stainless steel		MG-90-103-24
Spacer for 10mm (3/8") door thickness		MG-92-100-50
P-striker, anodized aluminum		MG-90-105-50
P-striker, anodized, black		MG-90-105-61

Assembly

MG - 05 - 73 C - 24

C **Door Thickness (A)**
3 12mm (.5)
6 22mm (.86)

Part Number Selection

Notes

Latch and striker are ordered separately. Please see Striker - Accessories table for options

M5 Push-to-Close Latch

Pull-to-open – Magnetic Catch

- **316 Stainless Steel**
- **Range of holding powers**
- **Adjustable swivel catch**

Material and Finish

Catches: 316 Stainless Steel
Magnet: NdFeB
Rubber Bumper: Buna, Black
Screws: 304 Stainless Steel

Flush Style Fixed Catch

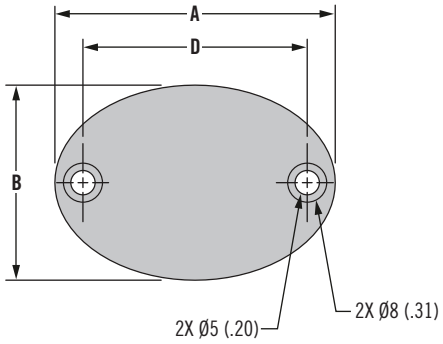

Proud Style Fixed Catch

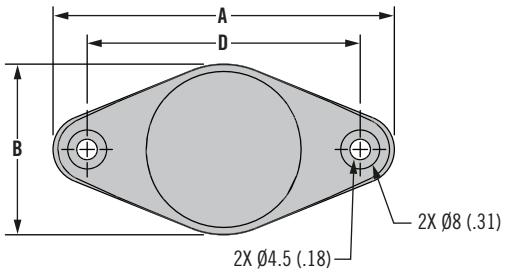

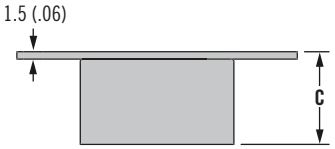

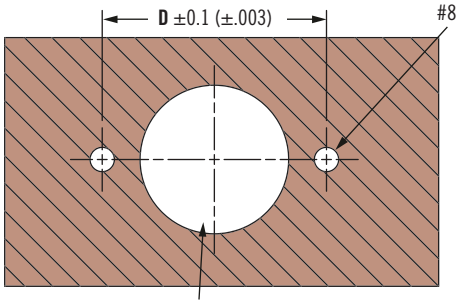

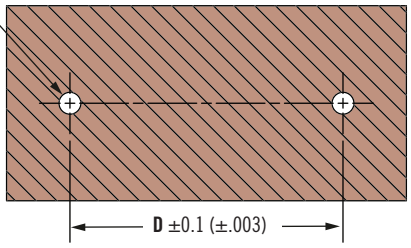

Fixed Catches

Part Number	Style	Strength	A	B	C	D	E	F
M5-7 M -41-8	Flush	Low	57.5 (2.26)	40 (1.57)	14 (.55)	46 (1.81)	21.5 (.85)	13.5 (.53)
M5-7 M -61-8		High	57.5 (2.26)	40 (1.57)	19 (.75)	46 (1.81)	31.5 (1.24)	18.5 (.73)
M5-7 M -42-8	Proud	Low	46.5 (1.83)	27 (1.06)	15.2 (.60)	34 (1.34)		
M5-7 M -62-8		High	70 (2.76)	35 (1.38)	19 (.75)	56 (2.20)		

M - Magnetic Polarity
N = Negative
P = Positive

How to order:

A complete set consists of a positive fixed catch and a negative fixed or swivel catch. Select catches to meet the needs for mounting style and strength.

Step 1
Select catch strengths.

Magnetic strength of combined catch guidelines		
Nominal Hold	Catch 1 Strength	Catch 2 Strength
50 N (11 lb.)	Low	Low
69 N (15 lb.)	Low	High
118 N (26 lb.)	High	High

Step 2
Select a negative catch style to fit your application.

Options:
Fixed Flush or Proud
Swivel Low Profile or Adjustable Height
Use "**N**" in 4th character of part number.

Step 3
Select a positive catch style to fit your application.

Options:
Fixed Flush or Proud
Use "**P**" in 4th character of part number.

Dimensions in millimeters (inch) unless otherwise stated

M5 Push-to-Close Latch

Pull-to-open – Magnetic Catch

Low Profile Swivel Catch

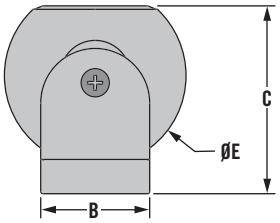

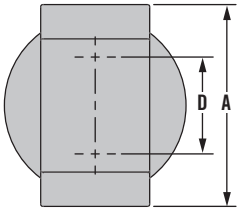

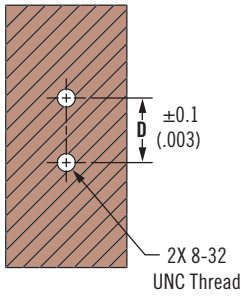

Adjustable Height Swivel Catch

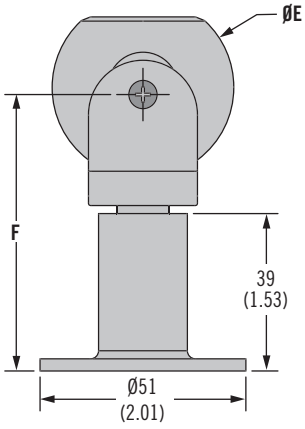

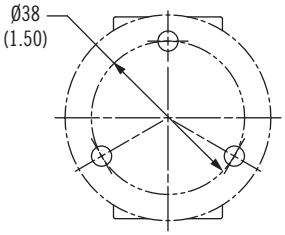

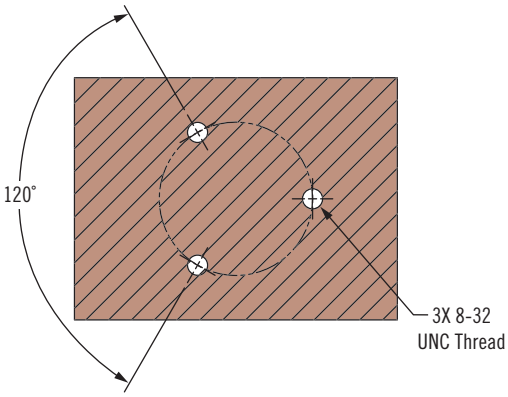

Low Profile Swivel Catch

Part Number	Strength	A	B	C	D	E
M5-7N-43-8	Low	37 (1.46)	18.5 (.73)	32 (1.26)	16 (.63)	Ø32 (1.26)
M5-7N-63-8	High	50 (1.97)	27 (1.06)	46.7 (1.84)	24 (.94)	Ø45 (1.77)

Adjustable Height Swivel Catch

Part Number	Strength	E	F Min	F Max
M5-7N-44-8	Low	Ø32 (1.26)	60 (2.36)	89 (3.50)
M5-7N-45-8	Low	Ø32 (1.26)	75 (2.95)	101 (3.98)
M5-7N-65-8	High	Ø45 (1.77)	68.5 (2.70)	95 (3.74)

SOUTHCO® Warranty

Seller warrants that the products manufactured and sold by Seller shall be in accordance with Seller's published specifications and free from defects in material and workmanship for a period of one (1) year from the date of delivery to Buyer if used under normal circumstances and provided any defect(s) are not the result of: (i) installation method; (ii) customer or third-party abuse or misuse; (iii) failure to adhere to Seller's instructions; or (iv) except as otherwise may be specifically stated in Seller's product literature, wear or deterioration due to environmental conditions. Buyer shall give written notice to Seller within 20 days of the discovery of any alleged defect within such one (1) year period, and any action shall be brought within one (1) year after such breach of warranty is or should have been discovered.

This is the sole and exclusive warranty of Seller; there are no other warranties, either express or implied, as to any matter whatsoever, including, without limitation, the ***implied warranties of merchantability or fitness for particular purpose.*** The sole and exclusive remedy of Buyer for any breach of warranty by Seller shall be that Seller shall provide, upon confirmation of the defective condition of the subject part, at no cost to Buyer, a replacement part for each defective part manufactured and sold by Seller to Buyer, or at Buyer's choice, Buyer shall receive a credit toward a future purchase in an amount equal to the purchase price paid by Seller for defective parts.

In no event shall seller be liable for consequential or indirect damages, or economic losses, loss of use, lost profits, down time or damages due to delay, whether by reason of breach of warranty, breach of contract, negligence, strict liability or otherwise, whether forseeable or not and whether or not seller has been advised of the possibility of such damage.

Performance and Application Guidelines

Southco designs and manufactures a broad range of products for general industry applications. Because every application cannot be anticipated, users must test potential product solutions under the actual application conditions and environment to determine the suitability of the product for the purpose and function intended by the user and to assure desired performance.

SOUTHCO® Performance and Application Guidelines are supplied as general guides only, as conditions vary with each application and installation method. Strength data given is for failure of the product or where sufficient deformation occurs to make the product inoperable. No safety factor has been applied. Product strength and cycle life data presented are developed from products tested at ambient temperature, unless otherwise specified.

Flammability ratings presented are for material properties only and are not specific to the dimensions or performance of the actual product, unless otherwise specified. Temperature ranges presented as Material Temperature Range are for material properties only. Dimensions are furnished for the sole purpose of enabling the user to determine envelope sizes and to install the product properly. SOUTHCO MAKES NO WARRANTIES OR REPRESENTATIONS WITH RESPECT TO ERRORS OR OMISSIONS THAT MAY BE CONTAINED WITHIN SUCH INFORMATION, THE ACCURACY OF SUCH INFORMATION, OR OTHERWISE. THE RISK OF USE OF SUCH INFORMATION IS SOLELY UPON THE USER.

SOUTHCO® products are subject to changes at any time in design, dimensions, specifications, material and/or finish without notice. You should confirm the current product characteristics before making a selection. For performance guidelines for each *SOUTHCO®* product, contact your local *SOUTHCO®* customer service and technical support center or e-mail us at info@southco.com.

Glossary of *SOUTHCO®* Standard Terms

Average Ultimate Load:
The average load that causes failure or excessive deformation which renders the product inoperable.

Clamping Force:
The force exerted on the panels when drawn together at the nominal mounting dimensions.

Detent:
A pre-set, internal positioning feature that allows a fastener or hinge to rotate into fractional positions and/or to hold panel(s) or door(s) in a full/partially opened position. Also used to indicate the full-opened or closed position of some latching mechanisms. In hinges, also called Door Positioning or Hold-open feature.

EMI / RFI:
Electromagnetic interference or radio frequency interference is a (usually undesirable) disturbance that affects an electrical circuit due to electromagnetic radiation emitted from an external source.

EMI / RFI Shielding:
The capability to reduce the transmission of electromagnetic or radio energy into or out of an enclosure

Ferrule:
The component of a Captive Fastener/Quarter-Turn Fastener that is captivated to the panel.

Frame:
The surface or "inner panel" against which a door closes. Consideration of frame thickness / geometry is an important part of the latch selection process.

Fully-Retractable:
The ability of a Captive Fastener to be withdrawn so that no portion of the screw threads protrude beyond the inner surface of the outer panel when disengaged.

Grip:
Generally, the total thickness being fastened. Usually defined as the dimension from the outer surface of the door or outer panel to the inside surface of the frame or inner panel. For DZUS® Quarter Turn Fasteners, grip is denoted as "Total Material Thickness" (TMT) which is defined as the thickness of outer panel, frame and accessory items.

Grip Range:
The Minimum to Maximum allowable total material thickness for a given product that provides for proper operation.

Keeper/Keeper Plate:
A component used to engage with the primary latch mechanism.

Key-Choice System:
The *SOUTHCO®* Key-Choice System features a common lock core that fits a wide range of latches. This system allows for the independent selection of the latch and the lock core required to manage the security of the end product (see page 158).

Machinery Directive:
The EU Machinery Directive 2006/42/EC, in effect from 29 December 2009, is the regulatory basis for essential health and safety requirements for machinery at European Union level. Southco recommends a range of access hardware solutions to comply with the requirements of this law. (see page 544).

Material and Finish:
The base (primary) material used in the product and any supplementary coating applied to provide protection and to enhance the product appearance.
Maximum Dynamic Working Load:
The maximum recommended load at which the product continues to function properly throughout its intended cycle life.

Maximum Static Load:
The maximum recommended load after one time application and removal of which the product continues to function properly.

Multi-Point System:
A multi-point latching system requiring the actuator, rods and guide to be ordered from the same product family.

NEMA/IP:
Refers to standards for an enclosure's resistance to dust, rain, hose-directed water, and/or ice damage. Individual components (latches, etc.) are not certified to NEMA or IP, but can help the entire enclosure achieve certification. All latches and other components should always be tested in the individual application.

Over-Center/Under-Center:
Two types of SOUTHCO® draw latches, described on page 324.
Over-center: During actuation, the moving pin rotates above the stationary pin.
Under-center: During actuation, the moving pin rotates below the stationary pin.

Receptacle:
The component that accepts a Quarter-turn stud or Fast-lead Thread screw and provides for positive fastening. Receptacle selection is a critical feature when designing in a Quarter-turn Fastener or Fast-lead Thread screw.

Secondary Catch:
An optional component of draw latches that provides added resistance to vibration, accidental opening, and shock load.

Spring Loaded:
A latch assembly in which the latching force is provided by an integral spring component which allows for vibration and gasket relaxation.

Tightening Torque:
The maximum recommended torque to be applied to the mounting hardware or to the latch itself. Tightening torque should not exceed recommended values, or latch damage/failure may occur.

Type A/Type B:
Generally describes right- or left-handed operation and/or installation of latches or hinges. Also described as clockwise/counterclockwise latch operation.

Rod System:
A multi-point accessory that can be added to a range of standard single point Southco latches.

Two / Three Point Latching:
A latching arrangement having latching and or compression capabilities in two or three areas of a door and frame (see overview on page 206-207).

Standard Finishes

The following information is intended to provide general guidelines regarding performance characteristics of Southco's standard finishes. Southco is committed to protecting the environment and promoting the use of environmentally friendly finishes that meet the requirements of the industries we serve. All standard *SOUTHCO®* finishes are compliant with environmental regulations and directives such as REACH, RoHS, POHS, ELV and WEEE. Visit our website at www.southco.com for more details. Please contact a Southco Applications Engineer with questions or concerns related to standard or custom *SOUTHCO®* finishes.

ZINC PLATING WITH TRIVALENT CHROMATE AND SEALER - This is currently Southco's standard finish of choice for steel base metal. A metallic (inorganic) sacrificial finish, which primarily provides excellent corrosion protection. Available in bright metallic and black.

ZINC-ALLOY PLATING - A metallic (inorganic) sacrificial finish, which primarily provides excellent corrosion protection to steel base metal. This finish is recommended where superior corrosion resistance over zinc plating is desired. Small additions of nickel or iron to zinc result in greatly enhanced corrosion performance of zinc-alloy plating over zinc plating. Additional improvement in corrosion performance can be imparted by treating with chromate and sealer. Available in bright metallic and black. Zinc alloy plating to meet automotive or other industry specific corrosion resistance is available on special order.

ZINC PLATING - A metallic (inorganic) sacrificial finish, which provides good corrosion protection. It secondarily provides an attractive, bright, metallic finish to steel components. Zinc plating is available with various chromate and phosphate passivates in bright metallic and black colors.

ZINC IMMERSION COATING - A zinc and aluminum flake dispersion in polymer or inorganic binder. The flakes align in multiple layers, forming a metallic silver-gray coating over ferrous metal parts for very good corrosion protection. Top coats of various colors further enhance color choices for this finish.

CHROMIUM PLATING - Offers excellent appearance along with corrosion resistance for steel, zinc, aluminum and polymer base materials. A hard, durable finish that is preferred when cosmetic appearance is the primary determinant for finish selection. Available in bright and satin appearance.

NICKEL PLATING - Offers both functional and cosmetic characteristics at a relatively low cost. Nickel plating is available both via electro- and electroless deposition processes. The finish is highly tailorable and can be produced at different hardness levels, friction characteristics and colors. Available in bright metallic, satin, black on steel, zinc aluminum and polymer base materials.

BLACK OXIDE COATINGS - An inorganic finish for steel and stainless steel base metal. Primarily a cosmetic finish that can be supplemented with an oil, wax or polymer top coat.

PHYSICAL VAPOR DEPOSITION (PVD) COATINGS - Hard, corrosion resistant and attractive finishes that mimic the appearance of metal but have properties of ceramics. Applied over chromium plating, nickel plating or bare metal, the coatings can have appearance of gold, brass, bronze or chromium, depending on the chemistry of the PVD ceramic. A very popular finish for marine hardware.

POWDER COATINGS - An organic finish, which provides an attractive finish in a wide variety of colors and glosses. This finish can be applied over various pre-treatments, such as zinc plating, zinc-alloy plating, chromating and phosphating, for additional corrosion protection.

ELECTROPHORETIC (E-COAT) COATINGS - Environmentally friendly finish with a wide variety of color and gloss choices for steel, stainless steel, zinc and aluminum base materials. The coating offers excellent coverage, a very uniform thickness, excellent adhesion to the base metal and superior abrasion resistance.

ANODIZED COATINGS - Formed on aluminum base metal, these coatings impart corrosion and wear resistance to the base metal. Thickness can be varied from a few nanometers (soft) to several microns (hard). Corrosion resistance can be further enhanced by treating with various passivates.

ELECTROPOLISHING AND PASSIVATION - Applied to stainless steels to enhance appearance and corrosion resistance.

PAINTS AND BAKED FLUOROPOLYMER COATINGS - Applied to various base materials, paints offer an attractive appearance and corrosion resistance. Can be applied on various painted primers or treatments such as chromate and phosphate dip. A wide selection of colors is available upon request. Baked fluoropolymer offer a more durable, hard coating in a variety of colors. These finishes are preferred by food and medical industry due to their inertness.

Not all finishes can be applied to all base materials or substrates. Other treatments and finishes are available. Contact a Southco Application Engineer to discuss finishing options.

Conversion Charts

To Convert	Into	Multiply By
Feet	Inches	12
Feet	Millimeters	304.8
Feet	Meters	0.3048
Foot-Pounds	Newton-Meters	1.356
Inches	Millimeters	25.4
Inches	Meters	0.0254
Inches	Feet	0.08333
Inch-Pounds	Newton-Meters	0.113
Kilograms (force)	Newtons	9.807
Kilograms (mass)	Pounds (mass)	2.205
Meters	Millimeters	1000

To Convert	Into	Multiply By
Meters	Inches	39.37
Meters	Feet	3.281
Millimeters	Meters	0.001
Millimeters	Inches	0.03937
Millimeters	Feet	0.003281
Newtons	Kilograms (force)	0.102
Newtons	Pounds (force)	0.2248
Newton-Meters	Inch-Pounds	8.851
Newton-Meters	Foot-Pounds	0.7376
Pounds (mass)	Kilograms (mass)	0.4536
Pounds (force)	Newtons	4.448

Installation Guidelines

for *SOUTHCO®* Self-Clinching products

Self-clinching product installation is offered on these *SOUTHCO®* products, making them easy-to-use captive panel fasteners:

- **Captive Screws**
- **Receptacles for Quarter-turn Fasteners**
- **Receptacles for Fast-lead Thread Screws**
- **Spring-loaded Plungers**
- **Captive Nuts**
- **Threaded Inserts**

When pressed into a properly prepared hole, self-clinching captive fasteners cold-flow (move) the panel material into the retaining groove of the fastener. This material then retains the fastener in the panel.

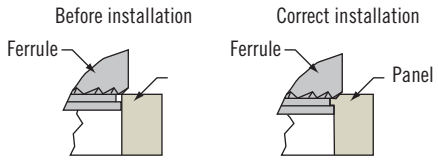

Successful press-in installations depend on:

Material:

The hardness of the panel material must not exceed *SOUTHCO®* recommendations. If the panel is too hard, the fastener will not install correctly.

Installation Holes:

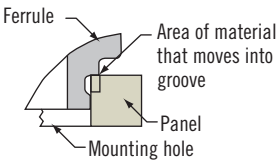

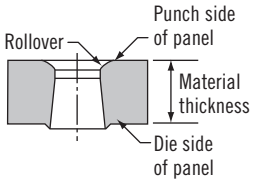

Mounting holes may be drilled, punched, or cast.

- Hole edge: the top hole edge must be sharp but with no broken edges.
  Do not chamfer or debur edge.
- Punched holes: use a punch and die with a small clearance to minimize the rollover and fracture angle.
- Hole diameter: measure the hole diameter at the panel surface on the side on which the fastener will be installed. The diameter must be within SOUTHCO® specifications for that product.
  - If the hole is too large, not enough material will flow into the retaining groove and the fastener may not be retained adequately.
  - If the hole is too small, the fastener will not fit and installation may become difficult and unsafe.
- Hole distance from the edge of panel: the minimum recommended distance is 1.5 x the diameter of the mounting hole, unless otherwise indicated.
  - Installing too close to the edge will cause the material to flow in the opposite direction, deforming the edge of the panel. To install closer to the edge, you may need to restrain the panel edge.

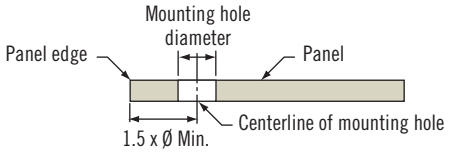

Panel Thickness:

The thickness of the panel at the mounting hole location must meet or exceed Southco's stated minimum recommendations.
If the material is too thin, panel deformation and/or damage to the fastener may result.

Installation is fast and easy if you follow these tips:

How to install: Use the recommended force where noted and a proper back-up tool.

- use any parallel-acting press
- use a punch whose diameter is larger than the head of the fastener

Installation Force: Proper installation requires an even distribution of adequate force. It does not depend on the distance the fastener is pressed into the panel.

- Southco does not recommend using a hammer. The impact force does not provide an even distribution of force to allow the panel material to completely flow into the fastener's retaining groove.
- Installation force varies from application to application, depending on the criteria noted above.
- On parts without a collar to provide a hard stop, press-in until the edge of the knurl is just barely visible.

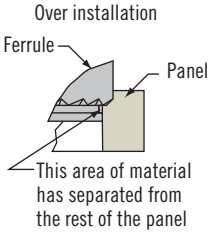

When to Install:

Installation is recommended after plating or finishing has been applied to the panel.
The hole diameter must meet specifications before finish or plating is applied.

- Do not over-install parts. This interupts the material and will reduce the retention strength.

Product Attributes Index

This page provides an overview of key product features with a reference to the corresponding *SOUTHCO*® PRODUCT CLASS.
Please refer to page 629 to find the corresponding page number(s) for each PRODUCT CLASS.

Product Features	Product Class																																
AMC	P7																																
ATCA	CN	P7	4C	47																													
Concealed (hidden) products	A4	C3	E2	E4	F6	MT	R2	R4	R4-EM	R5	R6	ST	T9	02																			
cPCI	P7																																
Door positioning hinges	C6	E6	G6	G7	ST																												
FMVSS206	R4																																
IP65 / NEMA4 rated	CM	C5	E3	E5	H3	M1	M3																										
Key-Choice System (see page 158)	AC	CM	C2	C5	E5	H3	PK	R3	62																								
Key-locking	AC	A3	A7	CM	CR	C2	C5	E3	E5	F2	H3	K4	K5	MP	M1	M3	N2	PK	PT	P2	R3	R4	V7	01	24	62	64	92	93				
Machinery directive compatible (see page 541)	C2	C5	D1	D4	D8	E3	E5	N7	09	12	14	17	4C	43	44	47	52	57	62	82	85												
Multi-point compatible	AC	E2	E3	E5	H3	M1	R3	R4	01	24	62	64	68	92																			
Multi-point systems	CR	F2	H3	H3-EM	M3																												
Padlocking	A1	A2	E3	E5	H3	K3	K5	M3	MT	TL	V2	91	97																				
Positioning plungers	56																																
Rack attach products	D4	D7	D8	DM	NY	19	47	4C	52																								
Round hole installation	A1	A2	A7	BC	C6	C7	D4	D8	E3	E5	E6	EH	F5	G6	G7	MP	MT	M1	NY	N6	T6	ST	02	07	09	12	14	17	19	37	4C	43	
	44	47	5T	52	56	57	68	82	85	91	92	96	97																				
Secondary catch	P7	TL	07	91	92	96	97																										
Stainless steel	A1	D4	E3	E5	EH	F5	F6	K2	K3	K5	LA	LG	LH	LJ	LR	MP	MT	M1	N6	R6	TL	V2	V4	V7	09	12	17	24	37	44	52	57	
	64	82	85	91	96	97																											
Surface mounting	A1	A2	A7	B4	B8	C6	C7	E6	E8	EH	F6	F7	G6	KH	N6	K2	K3	K4	K5	P8	P9	ST	TL	V2	V4	V7	07	37	91	96	97		
Swinghandles	CR	H3	H3-EM																														
Tool access	AC	A6	C2	C5	CM	D1	D4	D7	D8	E3	E5	F5	H3	LA	LG	LH	LJ	LR	M2	M3	NY	PK	R2	R3	R5	14	16	27	4C	43	44	47	
	48	52	57	62	82	85																											
UL1950	47																																
UL94-V0	A3	C3	NY	P1	P2	P7	4C	52	56	64																							

Product Class Index

This page lists all standard *SOUTHCO*® latching solutions by PRODUCT CLASS. The first two characters of every part number refer to the PRODUCT CLASS. All products within a given PRODUCT CLASS have similar characteristics and are grouped together.

Product class	Page
AC	289, 308-323
AC-EM	42-43
AH	398-399
AV	56-85
A1	340-342
A3	264-267
A4	243
A5	227, 230-233
A7	141
B4	604
B8	600-601
CA	389
CB	390-391
CM	194-201
CN	578-579, 588
CR	216-219
C2	138-140
C3	240-242
C5	136-137
C6	403
C7	357
DM	570
D1	474-477
D4	478-491
D5	492-493
D7	494-496
D8	450-467
D9	468-473
EA	48-55
EH	416-419

Product class	Page
EM	44-47
E2	254-255
E3	90-121
E4	244-245
E5	150-175
E6	372-379, 400-401
E9	122-125
F2	220-223
F5	559
F6	422-426
F7	359
GA	145
G6	402
G7	404
H3	186-187, 224-229
H3-EM	38-41
HH	591
K2	348
K3	349-350
K4	351
K5	352-353
MA	606-609
MC	614
ME	610-611
MF	618-619
MG	620-621
MM	615-617
MP	259, 262-263, 597
MR	612-613
MT	252-253

Product class	Page
M1	134-135, 256-258, 260-261, 276-277
M3	210-215
M5	250-251, 622-623
NY	497-499
N2	126-127
N6	420-421
N7	561
PK	190-191
PT	202-203
P1	596
P2	594-595
P7	574-577, 580-587, 589-590
P8	602
P9	603
R2	354-355
R3	272-274, 309
R4	275, 288-307
R4-EM	20-37
R5	356
R6	427-429
ST	380-388, 392-397
TL	336-339, 505
V2	334
V4	335
V7	328-329
01	182-183
02	246-249
07	343
09	562-563
12	564-567

Product class	Page
14	143
17	568-569
19	506-509
24	184
27	142
37	358, 360-363
43	143
44	143
47	516-535, 542-548, 558
48	142
4C	536-541, 546-547, 549, 558
5T	560
52	550-557
56	500-504
57	144
61	185
62	128-133
64	278-285, 320
67	598-599
68	178-181
69	184
80	277
82	436-443
85	444-449
91	344-347
92	176-177, 185
93	268-271
96	405-415
97	330-333

Looking for a PRODUCT CLASS not listed above?
Go to www.southco.com/XX where XX refers to the PRODUCT CLASS of interest

ENGINEERED ACCESS SOLUTIONS

southco®

Southco, Inc. is the leading global designer and manufacturer of engineered access solutions. From quality and performance to aesthetics and ergonomics, we understand that first impressions are lasting impressions in product design. For over 70 years, Southco has helped the world's most recognized brands create value for their customers with innovative access solutions designed to enhance the touch points of their products in transportation and industrial applications, medical equipment, data centers and more.

Latches

Fasteners

Monitor Mounts

Handles

Hinges

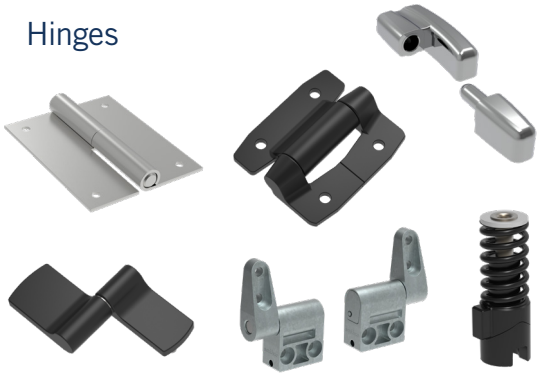

Scan the code to find out more and get in touch

southco®

Americas Global Headquarters
Concordville, PA, USA
Tel: (1) 610 459 4000

Europe Headquarters
Worcester, UK
Tel: (44) (0) 1905 346722

Asia Pacific Headquarters
Hong Kong, China
Tel: (852) 3127 1503

southco.com | info@southco.com